03847

OPERATING AND SERVICE MANUAL

1311B
X-Y DISPLAY

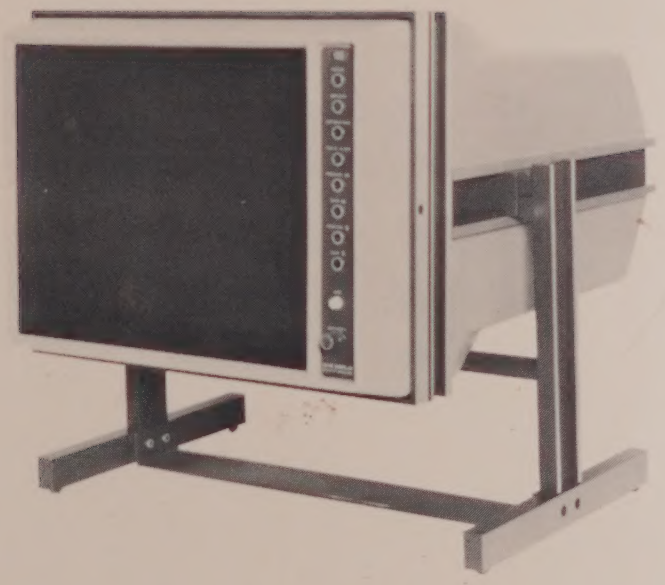

HEWLETT PACKARD

HEWLE
PACK

OPERATING AND SERVICE MANUAL

MODEL 1311B
X-Y DISPLAY

(Including Options 001, 002, 003, 004, 330, 604, 639, 900, 901, 902, 904, 905, 906, 910, 912)

SERIAL NUMBERS

This manual applies directly to instruments with serial numbers prefixed **2347A**.

With changes described in Section VII, this manual also applies to instruments with serial prefixes **1943A**, **2140A**, **2211A** and **2226A**.

For additional important information about serial numbers, see INSTRUMENTS COVERED BY MANUAL in Section I.

© COPYRIGHT HEWLETT-PACKARD COMPANY/COLORADO SPRINGS DIVISION 1983
1900 GARDEN OF THE GODS ROAD, COLORADO SPRINGS, COLORADO, U.S.A.

ALL RIGHTS RESERVED

Manual Part Number 01311-90920
Microfiche Part Number 1311-90820

PRINTED: NOVEMBER 1983

SAFETY

This product has been designed and tested according to International Safety Requirements. To ensure safe operation and to keep the product safe, the information, cautions, and warnings in this manual must be heeded. Refer to Section I and the Safety Summary for general safety considerations applicable to this product.

CERTIFICATION

Hewlett-Packard Company certifies that this product met its published specifications at the time of shipment from the factory. Hewlett-Packard further certifies that its calibration measurements are traceable to the United States National Bureau of Standards, to the extent allowed by the Bureau's calibration facility, and to the calibration facilities of other International Standards Organization members.

WARRANTY

This Hewlett-Packard product is warranted against defects in material and workmanship for a period of one year from date of shipment. During the warranty period, Hewlett-Packard Company will, at its option, either repair or replace products which prove to be defective.

The cathode-ray tube (CRT) in the instrument and any replacement CRT purchased from HP are also warranted against electrical failure for a period of one year from the date of shipment from Colorado Springs. BROKEN TUBES AND TUBES WITH PHOSPHOR OR MESH BURNS, HOWEVER, ARE NOT INCLUDED UNDER THIS WARRANTY.

For warranty service or repair, this product must be returned to a service facility designated by HP. However, warranty service for products installed by HP and certain other products designated by HP will be performed at Buyer's facility at no charge within the HP service travel area. Outside HP service travel areas, warranty service will be performed at Buyer's facility only upon HP's prior agreement and Buyer shall pay HP's round trip travel expenses.

For products returned to HP for warranty service, Buyer shall prepay shipping charges to HP and HP shall pay shipping charges to return the product to Buyer. However, Buyer shall pay all shipping charges, duties, and taxes for products returned to HP from another country.

LIMITATION OF WARRANTY

The foregoing warranty shall not apply to defects resulting from improper or inadequate maintenance by Buyer, Buyer-supplied software or interfacing, unauthorized modification or misuse, operation outside of the environmental specifications for the product, or improper site preparation or maintenance.

NO OTHER WARRANTY IS EXPRESSED OR IMPLIED. HP SPECIFICALLY DISCLAIMS THE IMPLIED WARRANTIES OF MERCHANTABILITY AND FITNESS FOR A PARTICULAR PURPOSE.

EXCLUSIVE REMEDIES

THE REMEDIES PROVIDED HEREIN ARE BUYER'S SOLE AND EXCLUSIVE REMEDIES. HP SHALL NOT BE LIABLE FOR ANY DIRECT, INDIRECT, SPECIAL, INCIDENTAL, OR CONSEQUENTIAL DAMAGES, WHETHER BASED ON CONTRACT, TORT, OR ANY OTHER LEGAL THEORY.

ASSISTANCE

Product maintenance agreements and other customer assistance agreements are available for Hewlett-Packard products.

For any assistance, contact your nearest Hewlett-Packard Sales and Service Office. Addresses are provided at the back of this manual.

X-RAY RADIATION NOTICE

ACHTUNG

Model 1311B

WARNING

Während des Betriebs erzeugt dieses Gerät Röntgenstrahlung. Das Gerät ist so abgeschirmt, daß die Dosisleistung weniger als 36 pA/kg (0,5 mR/h) in 5cm Abstand von der Oberfläche der Katodenstrahlröhre beträgt. Somit sind die Sicherheitsbestimmungen verschiedener Länder, u.A. der deutschen Röntgenverordnung eingehalten.

Die Stärke der Röntgenstrahlung hängt im Wesentlichen von der Bauart der Katodenstrahlröhre ab, sowie von den Spannungen, welche an dieser anliegen. Um einen sicheren Betrieb zu gewährleisten, dürfen die Einstellungen der Niederspannungs- und des Hochspannungsnetzteils nur nach der Anleitung in Kapitel V des Handbuches vorgenommen werden.

Die Katodenstrahlröhre darf nur durch die gleiche Type ersetzt werden. (Siehe Kapitel Vi für HP — Ersatzteile).

Das Gerät ist in Deutschland zugelassen unter der Nummer: BW/78/80/Rö

When operating, this instrument emits x-rays; however, it is well shielded and meets safety and health requirements of various countries, such as the X-ray Radiation Act of Germany.

Radiation emitted by this instrument is less than 0.5 mR/hr at a distance of five (5) centimeters from the surface of the cathode-ray tube. The x-ray radiation primarily depends on the characteristics of the cathode-ray tube and its associated low-voltage and high-voltage circuitry. To ensure safe operation of the instrument, adjust both the low-voltage and high-voltage power supplies as outlined in Section V of this manual (if applicable).

Replace the cathode-ray tube with an identical CRT only. Refer to Section VI for proper HP part number.

Number of German License: BW/78/80/Rö

SAFETY CONSIDERATIONS

GENERAL — This instrument has been designed and tested in accordance with IEC Publication 348, Safety Requirements for Electronic Measuring Apparatus, and has been supplied in a safe condition. The present instruction manual contains some information and warnings which have to be followed by the user to ensure safe operation and to retain the apparatus in safe condition.

OPERATION — BEFORE APPLYING POWER verify that the power transformer primary is matched to the available line voltage, the correct fuse is installed, and Safety Precautions are taken (see the following warnings). In addition, note the instrument's external markings which are described under "Safety Symbols."

WARNING

Servicing instructions are for use by service-trained personnel. To avoid dangerous electric shock, do not perform any servicing unless qualified to do so.

BEFORE SWITCHING ON THE INSTRUMENT, the protective earth terminal of the instrument must be connected to the protective conductor of the (mains) power cord. The mains plug shall only be inserted in a socket outlet provided with a protective earth contact. The protective action must not be negated by the use of an extension cord (power cable) without a protective conductor (grounding). Grounding one conductor of a two conductor outlet is not sufficient protection.

If this instrument is to be energized via an auto-transformer (for voltage reduction) make sure the common terminal is connected to the earth terminal of the power source.

Any interruption of the protective (grounding) conductor (inside or outside the instrument) or disconnecting the protective earth terminal will cause a potential shock hazard that could result in personal injury.

Whenever it is likely that the protection has been impaired, the instrument must be made inoperative and be secured against any unintended operation.

Only fuses with the required rated current, voltage, and specified type (normal blow, time delay, etc.) should be used. Do not use repaired fuses or short circuited fuseholders. To do so could cause a shock or fire hazard.

Do not operate the instrument in the presence of flammable gases or fumes. Operation of any electrical instrument in such an environment constitutes a definite safety hazard.

Do not install substitute parts or perform any unauthorized modification to the instrument.

Adjustments described in the manual are performed with power supplied to the instrument while protective covers are removed. Energy available at many points may, if contacted, result in personal injury.

Any adjustment, maintenance, and repair of the opened instrument under voltage should be avoided as much as possible, and when inevitable, should be carried out only by a skilled person who is aware of the hazard involved.

SAFETY SYMBOLS

Instruction manual symbol: the product will be marked with this symbol when it is necessary for the user to refer to the instruction manual in order to protect against damage to the product.

Indicates hazardous voltages.

Earth terminal (sometimes used in manual to indicate circuit common connected to grounded chassis).

WARNING

The WARNING sign denotes a hazard. It calls attention to a procedure, practice,or the like, which, if not correctly performed or adhered to, could result in personal injury. Do not proceed beyond a WARNING sign until the indicated conditions are fully understood and met.

CAUTION

The CAUTION sign denotes a hazard. It calls attention to an operating procedure, practice, or the like, which, if not correctly performed or adhered to, could result in damage to or destruction of part or all of the product. Do not proceed beyond a CAUTION sign until the indicated conditions are fully understood or met.

TABLE OF CONTENTS

Section		Page
I	GENERAL INFORMATION	1-1
1-1.	Introduction	1-1
1-3.	Specifications	1-1
1-5.	Safety Considerations	1-1
1-8.	Instruments Covered by Manual	1-1
1-13.	Description	1-2
1-15.	Special Features	1-2
1-16.	Dynamic Focus - Astigmatism	1-2
1-17.	Phosphor Protection	1-2
1-18.	Input Modifications	1-2
1-19.	Options	1-4
1-21.	Accessories Supplied	1-4
1-23.	Equipment Available	1-4
1-25.	Recommended Test Equipment	1-4
II	INSTALLATION	2-1
2-1.	Introduction	2-1
2-3.	Initial Inspection	2-1
2-5.	Preparation for Use	2-1
2-6.	Power Requirements	2-1
2-7.	AC Line Voltage	2-1
2-8.	AC Line Voltage Selection	2-1
2-9.	AC Power Cable	2-2
2-10.	Operating Environment	2-2
2-11.	Temperature	2-2
2-12.	Humidity	2-2
2-13.	Altitude	2-2
2-14.	Storage and Shipment	2-2
2-16.	Packaging	2-2
III	OPERATION	3-1
3-1.	Introduction	3-1
3-3.	Panel Features	3-1
3-5.	Controls and Connectors	3-1
3-7.	Input Impedance Switches	3-1
3-8.	Phosphor Protection	3-1
3-9.	Preoperational Procedure	3-1
3-11.	Interfacing Considerations	3-3
3-12.	General	3-3
3-13.	TTL Blanking	3-3
3-14.	Binary Gray Shade	3-3
3-15.	Option 003 (Intensity as Brightness)	3-3
3-16.	Attenuators	3-3
3-17.	Polarity	3-3
3-18.	Bandwidth Reduction	3-3
3-19.	Ringing	3-3
3-20.	Performance Factors	3-4
3-21.	Spot Size and Resolution	3-4
3-24.	Brightness	3-4
3-27.	Settling Time	3-5
3-28.	Linearity	3-5
3-29.	Operator Maintenance	3-5
IV	PERFORMANCE TESTS	4-1
4-1.	Introduction	4-1
4-3.	Equipment Required	4-1
4-5.	Test Record	4-1
4-7.	Calibration Cycle	4-1
4-10.	X-Y Amplifier Bandwidth	4-2
4-11.	X-Deflection Factor	4-3
4-12.	Y-Deflection Factor	4-4
4-13.	Repeatability	4-5
4-14.	Crosstalk	4-6
4-15.	Z-Axis Blanking Polarity	4-7
4-16.	Binary Gray Shade	4-8
4-17.	Settling Time	4-11
V	ADJUSTMENTS	5-1
5-1.	Introduction	5-1
5-3.	Safety Requirements	5-1
5-5.	Equipment Required	5-1
5-7.	Adjustments	5-1
5-10.	Adjustment Procedures	5-1
5-11.	Low-Voltage Power Supply Adjustment	5-3
5-12.	High-Voltage Power Supply Adjustment	5-4
5-13.	Z-Axis Offset, Balance, Intensity, and Gain Adjustments	5-6
5-14.	Z-Axis Offset, Balance, Intensity, and Gain Adjustments (Option 003)	5-7
5-15.	Z-Axis and Focus Amplifiers Pulse Response	5-9
5-16.	X-Amplifier Gain Adjustment	5-10
5-17.	Y-Amplifier Gain Adjustment	5-10
5-18.	X-Amplifier DC Balance	5-11
5-19.	Y-Amplifier DC Balance	5-11
5-20.	X-Amplifier Pulse Response and Bandwidth Adjustments	5-12
5-21.	Y-Amplifier Pulse Response and Bandwidth Adjustments	5-14
5-22.	Trace-Align and Ortho Adjustments	5-16
5-23.	Dynamic Focus and Astigmatism Adjustment	5-16
5-24.	Dynamic Focus and Astigmatism Adjustment (Alternate Procedure)	5-20
VI	REPLACEABLE PARTS	6-1
6-1.	Introduction	6-1
6-3.	Abbreviations	6-1
6-5.	Replaceable Parts List	6-1
6-7.	Ordering Information	6-1
6-10.	Direct Mail Order System	6-1

TABLE OF CONTENTS (Cont'd)

Section		Page
VII	MANUAL CHANGES	7-1
7-1.	Introduction	7-1
7-3.	Manual Changes	7-1
VIII	SERVICE	8-1
8-1.	Introduction	8-1
8-4.	Theory of Operation	8-1
8-6.	Troubleshooting	8-1
8-7.	Initial Troubleshooting Procedure	8-1
8-8.	DC Voltages and Waveforms	8-1
8-9.	Recommended Test Equipment	8-1
8-11.	Repair	8-1
8-12.	Assembly Removal	8-1
8-13.	Preventive Maintenance	8-1
8-15.	Circuit Boards	8-2
8-16.	Board Connections	8-2
8-17.	Servicing Etched Circuit Boards	8-2
8-18.	Service Sheet 1 Basic Principles of Operation	8-2
8-19.	General	8-2
8-20.	Deflection Amplifiers	8-2
8-21.	Z-Axis Amplifier	8-2
8-22.	Phosphor Protection	8-2
8-23.	Dynamic Focus and Astigmatism	8-2
8-24.	Low Voltage Power Supply	8-2
8-25.	High Voltage Power Supply	8-2
8-26.	Service Sheet 2 Principles of Operation	8-4
8-27.	Input Amplifier and Gain Control Circuit (Q1A, Q1B)	8-4
8-28.	Gain Control (U1, U2, Q5)	8-4
8-29.	Service Sheet 3 Principles of Operation	8-6
8-30.	X-Y Output Amplifier (Q4 through Q9, Q10 through Q15)	8-6
8-31.	Troubleshooting	8-6
8-32.	Service Sheet 4 Principles of Operation	8-8
8-33.	Impedance Converter, Gain Control, and Binary Gray Shade	8-8
8-34.	Z-Axis Output Amplifier	8-8
8-35.	Phosphor Protection	8-8
8-36.	Service Sheet 5 Principles of Operation	8-10
8-37	Dynamic Focus	8-10
8-38.	X-Y Input Amplifiers (A6Q1 through A6Q4)	8-10
8-39.	Current Amplifiers (Q5, Q6, Q7, Q8)	8-10
8-40.	Focus Output (A6Q22 through A6Q25)	8-10
8-41.	Z-Axis Focus Correction (A6, Q9, Q10, Q11)	8-10
8-42.	Service Sheet 6 Principles of Operation	8-12
8-43.	Dynamic Astigmatism	8-12
8-44.	X-Y Input Amplifiers (A6Q13 through A6Q16)	8-12
8-45.	Current Amplifiers (A6Q17 through A6Q20)	8-12
8-46.	Focus Output Amplifier (A6Q21)	8-12
8-47.	Service Sheet 7 Principles of Operation	8-14
8-48.	Oscillator Power Supply (A9Q4, A9VR1, A9CR16)	8-14
8-49	High Voltage Oscillator (A9Q5, Primary of A9T1)	8-14
8-50.	Cathode Supply (A9CR7, Secondary of A9T1)	8-14
8-51.	High Voltage Regulator (A9U1)	8-14
8-52.	High Voltage Shutdown (A9U2, A9Q3, A9U1)	8-14
8-53.	Purpose	8-14
8-54.	Causes of X-ray Emissions	8-14
8-55.	Preventing X-ray Emissions	8-14
8-56.	Principles of Operation	8-14
8-57.	Troubleshooting	8-14
8-58.	CRT Circuits	8-14
8-59.	Grid Level Translator (A9CR9, A9CR10, A9CR11, A9CR12)	8-14
8-60.	Focus Level Translator (A9CR8, A9CR13, A9CR14, A9CR15)	8-14
8-61.	Filament and PA Supply (P/O T1, A10)	8-14
8-62.	Service Sheet 8 Principles of Operation	8-16
8-63.	+250 V Supply (A11CR1 through A11CR4, A11Q1 through A11R3, Q2)	8-16
8-64.	-15 V Supply (A11CR9 through A11CR12, A6Q6, A6Q7, Q3)	8-16
8-65.	+15 V Supply (A11CR5 through A11CR6, A6Q4, A6Q5, Q2)	8-16

LIST OF ILLUSTRATIONS

Figure	Title	Page
1-1.	X-Y Display	1-0
1-2.	Dimensional Detail, 1311B	1-3
2-1.	Line Voltage Selection Switches	2-1
2-2	Rear Panel Power Module	2-2
3-1.	Controls and Connectors	3-2
3-2.	Input Terminal Impedance of Displays Conntected in Parallel	3-4
3-3.	Brightness Versus Cross Section of Typical CRT Spot	3-4
3-4.	Settling Time	3-5
3-5.	Linearity of Beam Position Showing Ideal Position and Possible Error	3-5
3-6.	Jumper Connection for TTL Blanking and Intensity	3-6
3-7.	Binary Z-Axis Input Connector, J6	3-6
4-1.	Amplifier Bandwidth Test Setup	4-2
4-2.	X-Deflection Factor Test Setup	4-3
4-3.	Y-Deflection Factor Test Setup	4-4
4-4.	Repeatability Test Setup	4-5
4-5.	Cross Talk Test Setup	4-6
4-6.	Z-Axis Blanking Polarity Test Setup	4-7
4-7.	Binary Gray Shade Test Setup	4-8
4-8	Binary Gray Shade Test Pattern	4-10
4-9	Settling Time Test Setup	4-11
4-10.	Settling Time Measurement with 1 V Input	4-12
5-1.	1311B Top View	5-2
5-2.	1311B Bottom View	5-2
5-3.	High-Voltage Shutdown Circuit Nomograph	5-5
5-4.	Low-Voltage and High-Voltage Power Supply Adjustment Locations	5-5
5-5.	Binary Gray Shade Test Setup	5-6
5-6.	Binary Gray Shade Test Pattern	5-6
5-7.	Z-Axis Option 003 Test Setup	5-8
5-8.	Z-Axis Amplifier Adjustment Locations	5-9
5-9.	Gain Set Adjustment Test Setup	5-10
5-10.	X-Amplifier Pulse Response and Bandwidth Adjustment Setup	5-12
5-11.	X-Amplifier Pulse Response Adjustment	5-13
5-12.	Y-Amplifier Pulse Response and Bandwidth Adjustment Setup	5-14
5-13.	Y-Amplifier Pulse Response Adjustment	5-15
5-14.	X-Y-Amplifier Adjustment Locations	5-15
5-15.	Dynamic Focus and Astigmatism Test Setup	5-16
5-16.	Focus and Astigmatism Test Pattern	5-19
5-17.	Focus and Astigmatism Output Waveforms	5-19
5-18.	Dynamic Focus and Astigmatism Test Setup	5-20
5-19.	Focus and Astigmatism Waveforms	5-20
5-20.	Beam Locations For Focus and Astigmatism Procedure	5-21
5-21.	Focus and Astigmatism Adjustment Locations	5-21
6-1.	Chassis Parts and Board Assembly Identification	6-3
8-1.	Schematic Diagram Symbols	8-0
8-2.	Service Sheet 1, Overall Block Diagram	8-3
8-3.	Simplified Schematic of X-Y Gain Control	8-4
8-4.	X-Y Input Amplifier (A1, A3) Component Locator	8-4
8-5.	Service Sheet 2, X-Y Axis Input Amplifier (A1, A3) Schematic	8-5
8-6.	Simplified Output Amplifier Schematic	8-6
8-7.	X-Y Output Amplifier (A2, A4) Component Locator	8-6
8-8.	Control Board (A13) Component Locator	8-7
8-9.	Service Sheet 3, X-Y Axis Output Amplifier (A2, A4) Schematic	8-7
8-10.	Simplified Schematic of Z-Axis Gain Control	8-8
8-11.	Simplified Block Diagram of the Phosphor Protection Circuit	8-8
8-12.	Z-Axis Amplifier (A5) Component Locator	8-8
8-13.	Service Sheet 4, Z-Axis Amplifier (A5) Schematic	8-9
8-14.	Focus and Astigmatism Amplifier (A6) Component Locator	8-10
8-15.	Service Sheet 5, Dynamic Focus (A6) Schematic	8-11
8-16.	Focus and Astigmatism Amplifier (A6) Component Locator	8-12
8-17.	Service Sheet 6, Dynamic Astigmatism (A6) Schematic	8-13
8-18.	Simplified Schematic of High Voltage Regulator Circuit	8-14
8-19.	Simplified Schematic of High Voltage Shutdown Circuit	8-14
8-20.	High Voltage Power Supply (A9) Component Locator	8-14

LIST OF ILLUSTRATIONS (Cont'd)

Figure	Title	Page
8-21.	Service Sheet 7, High Voltage Power Supply (A9) Schematic	8-15
8-22.	Low Voltage Power Supply (A11) Component Locator	8-16
8-23.	Service Sheet 8, Low Voltage Power Supply (A11) Schematic	8-17
8-24.	Left and Right Connector Board Wiring Diagram(A7, A8)	8-18

LIST OF TABLES

Table	Title	Page
1-1.	Specifications	1-1
1-2.	Supplemental Characteristics	1-2
1-3.	Standard Options	1-4
1-4.	Recommended Test Equipment	1-5
3-1.	Binary Gray Shades	3-3
4-1.	Binary Gray Shades	4-8
4-2.	Binary Gray Shade Test Pattern Program for HP 9825B	4-9
4-3.	Binary Gray Shade Test Pattern Program for HP 85A	4-9
5-1.	Low Voltage and High Voltage Power Supply Adjustments	5-5
5-2.	Z-Axis Amplifier Adjustments	5-9
5-3.	X-Y Amplifier Adjustments	5-15
5-4.	Focus and Astigmatism Test Program for HP 9825B	5-17
5-5.	Focus and Astigmatism Test Program for HP 85A	5-18
5-6.	Focus and Astigmatism Adjustments	5-25.
6-1.	Reference Designators and Abbreviations	6-2
6-2.	Replaceable Parts	6-6
6-3.	List of Manufacturers Codes	6-30
7-1.	Manual Changes	7-1
8-1.	Service Sheet Quick Reference	8-1
8-2.	Troubleshooting Guide for X-Y Output Amplifier	8-6
8-3.	Troubleshooting Hints for High Voltage Shutdown Circuit	8-14

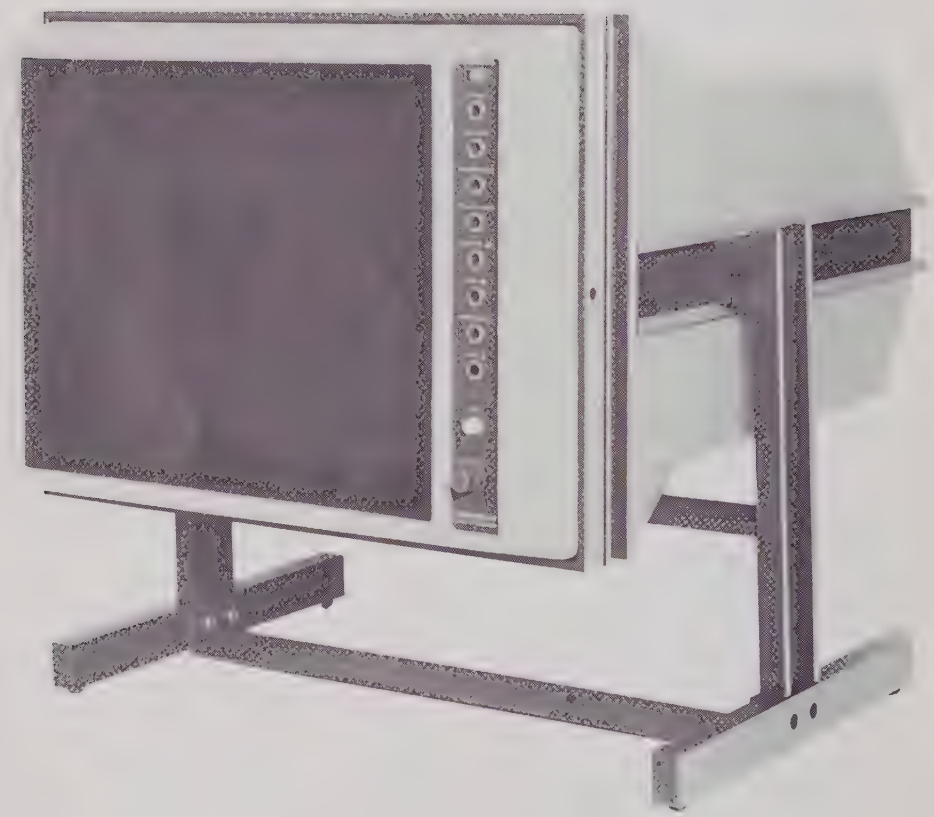

Figure 1-1. X-Y Display

SECTION I

GENERAL INFORMATION

1-1. INTRODUCTION.

1-2. This operating and service manual contains information required to install, operate, test, adjust, and service Hewlett-Packard Model 1311B. The manual part number is listed on the title page. Also listed on the title page of this manual is a Microfiche part number. This number can be used to order 4 x 6-inch microfilm transparencies of the manual. Each microfiche contains up to 96 photo-duplicates of the manual pages. The microfiche package also includes the latest Manual Changes supplement as well as a pertinent Service Note.

1-3. SPECIFICATIONS.

1-4. Instrument specifications are listed in table 1-1. These specifications are the performance standards or limits against which the instrument is tested. Table 1-2 lists supplemental characteristics. Supplemental characteristics are not specifications but are typical characteristics included as additional information for the user.

1-5. SAFETY CONSIDERATIONS.

1-6. This product is a Safety Class 1 instrument (provided with a protective earth terminal). The 1311B X-Y Display is equipped with a detachable, three-conductor power cord which, when plugged into an appropriate outlet, grounds the instrument through a separate pin. When operating the 1311B from a two-conductor adapter, preserve the safety feature by grounding the adapter lead.

1-7. Prior to operating or performing maintenance on the instrument become familiar with all safety markings and instructions. Read the Safety Considerations page at the front of this manual for general safety information.

1-8. INSTRUMENTS COVERED BY MANUAL.

1-9. Attached to the instrument is a serial number plate. The serial number is in the form: 0000A00000. It is in two parts; the first four digits and the letter are serial prefix and the last five digits are the suffix. The prefix is the same for all identical instruments; it changes only when a change is made to the instrument.The suffix however, is assigned sequentially and is different for each instrument. The contents of this manual apply to instruments with the serial number prefix(es) listed under SERIAL NUMBERS on the title page.

1-10. An instrument manufactured after the printing of this manual may have a serial number prefix that is not listed on the title page. This unlisted serial number prefix indicates the instrument is different from those described in this manual. The manual for this newer instrument is accompanied by a yellow Manual Change supplement. This supplement contains "change information" that explains how to adapt the manual to the newer instrument.

1-11. In addition to change information, the supplement may contain information for correcting errors in the manual. To keep this manual as current and accurate as possible, Hewlett-Packard recommends that you periodically request the latest Manual Change supplement. The supplement for this manual is identified with the manual print date and part number, both of which appear on the manual title page. Complementary copies of the supplement are available from Hewlett-Packard.

1-12. For Information concerning a serial number prefix that is not listed on the title page or in the Manual Change supplement, contact your nearest Hewlett-Packard office.

Table 1-1. Specifications

VERTICAL AND HORIZONTAL AMPLIFIERS

RISE TIME: <75 ns, 10% to 90% points for full screen deflection.

BANDWIDTH: dc to 5 MHz (3 dB down at 5 MHz) with 8.9 cm (3.5 in.) deflection.

SETTLING TIME: signal settles to within 1 spot diameter of final value in <500 ns for any on screen movements.

REPEATABILITY: <0.15% of full screen error in readdressing any point on screen from any point on screen.

CROSSTALK: <0.38 mm (<0.015 in.) with one input terminated in 50Ω and the other input driven by 1 V, 500 kHz signal.

DEFLECTION FACTOR: front panel adjustable through the range indicated below:

Vertical	Horizontal
from approx. 46.3 mV/cm (118 mV/in.) to 81 mV/cm (207 mV/in.)	from approx. 35.8 mV/cm (90 mV/in.) to 60.9 mV/cm (153 mV/in.)

Table 1-1. Specifications (Cont'd)

SPOT JITTER AND MOTION: 0.13 mm (0.005 in.) with X INPUT and Y INPUT disconnected.
POSITION: zero input can be set to any on-screen postion.
POLARITY: positive vertical input moves the beam up; positive horizontal input moves the beam right.
X-Y INPUT: rear panel BNC female connectors with floating shield.
X-Y INPUT IMPEDANCE: 50Ω, switchable to 10 kΩ shunted by 40 pF.
MAXIMUM INPUT: ±50 V (dc + peak ac) with 10 kΩ internal termination. ±5 V (dc + peak ac) with 50Ω internal termination.
LINEARITY: 1% of full scale display (along major axes).
DRIFT: 5.08 mm/hr (0.2 in./hr) first hour and 6.35 mm/hr (0.25 in./hr) in next 24 hours with covers installed.

Z-AXIS AMPLIFIER

RISE TIME: <25 ns.
SENSITIVITY: −1 V signal blanks trace; +1 V signal (INTENSITY at maximum) provides maximum intensity. Polarity may be reversed by changing internal lead connections.
Z-INPUT: rear panel BNC female connector with floating shield.
Z-INPUT IMPEDANCE: 50Ω switchable to 10 kΩ shunt by 60 pF.
TTL BLANKING: high state blanks CRT. (polarity reversible).
BINARY GRAY SHADE: 3 bit TTL level input providing 7 gray shades and blanking.
MAXIMUM INPUT: ±50 V (dc + peak ac) with 10 kΩ internal termination. ±5 V (dc + peak ac) with 50Ω internal termination.

Table 1-2. Supplemental Characteristics

CATHODE-RAY TUBE

VIEWING AREA: 36.5 cm (14 in.) diagonal, useable viewing area at least 20.3 cm (8 in.) vertical by 25.4 cm (10 in.) horizontal.
TYPE: post-accelerator, 28.5 kV accelerating potential, P31 aluminized phosphor is standard. Electrostatic focus and deflection.
SPOT SIZE: 0.43 mm (0.017 in.) at center of screen.
RESOLUTION: ≥24 lines/cm (61 lines/in.) center screen and ≥20 lines/cm (50 lines/in.) in the corners over a 20.3 x 25.4 cm (8x10 in.) viewing area.
BRIGHTNESS: at least 84 cd/m^2 (24.5 fl) measured at 2.54 mm/μs (0.1 in./μs), 60 Hz rate, with spot size of 0.5 mm (0.020 in.), P31 Phosphor.
X-RAY EMISSION: CRT emission <0.5 mR/hr; not measurable above background noise using Victoreen Model 440RF/C.
IMPLOSION PROTECTION: rim tension banding prevents implosive devacuation. (UL/IEC348).
PHOSPHOR PROTECTION: circuit detects absence of deflection signals and limits beam current.
HIGH VOLTAGE SHUTDOWN: senses over voltage condition and turns off high voltage.

GENERAL:

POWER: selectable to 100 Vac 120 Vac, 220 Vac, and 240 Vac +5% −10%, 48 Hz to 440 Hz, 185 VA maximum.

ENVIRONMENT:

ALTITUDE: 4600m (15000 ft) operating at 25° C 7600m (25000 ft) non-operating.
TEMPERATURE: 0° C to +55° C operating; −40° C to +70° C non-operating.
HUMIDITY: to 95% at 40° C.
VIBRATION: 10-55 Hz at .38 mm (0.015 in.) peak to peak excursion.
SHOCK: level 30g; duration 11 ms; shape 1/2 sine wave.
X, Y, and Z INPUT CONNECTORS: BNC type mounted on rear panel.
WEIGHT: net, 24.7 kg (54.5 lb); shipping 30 kg (66 lb).
DIMENSIONS: refer to figure 1-2 for complete details.

1-13. DESCRIPTION.

1-14. The HP Model 1311B is a large screen, high speed, computer graphic display designed for OEM system applications. The CRT has an aluminized P31 phosphor and a 100% usable viewing area.

1-15. SPECIAL FEATURES.

1-16. DYNAMIC FOCUS-ASTIGMATISM. Voltages proportional to the position of the CRT beam are applied to the focus and astigmatism elements fo the CRT. This causes spot size and shape to remain constant over the CRT viewing area. Focus is also corrected for changes in intensity level.

1-17 PHOSPHOR PROTECTION. A protection circuit senses slow or static deflection signals and limits beam intensity to prevent burning of the CRT phosphor and mesh.

1-18. INPUT MODIFICATIONS. The input circuits to the X, Y, and Z amplifiers are designed to permit easy modification for single ended or differential operation. Additionally, the input termination resistance and the input attenuation ratio for the X and Y amplifiers can be changed.

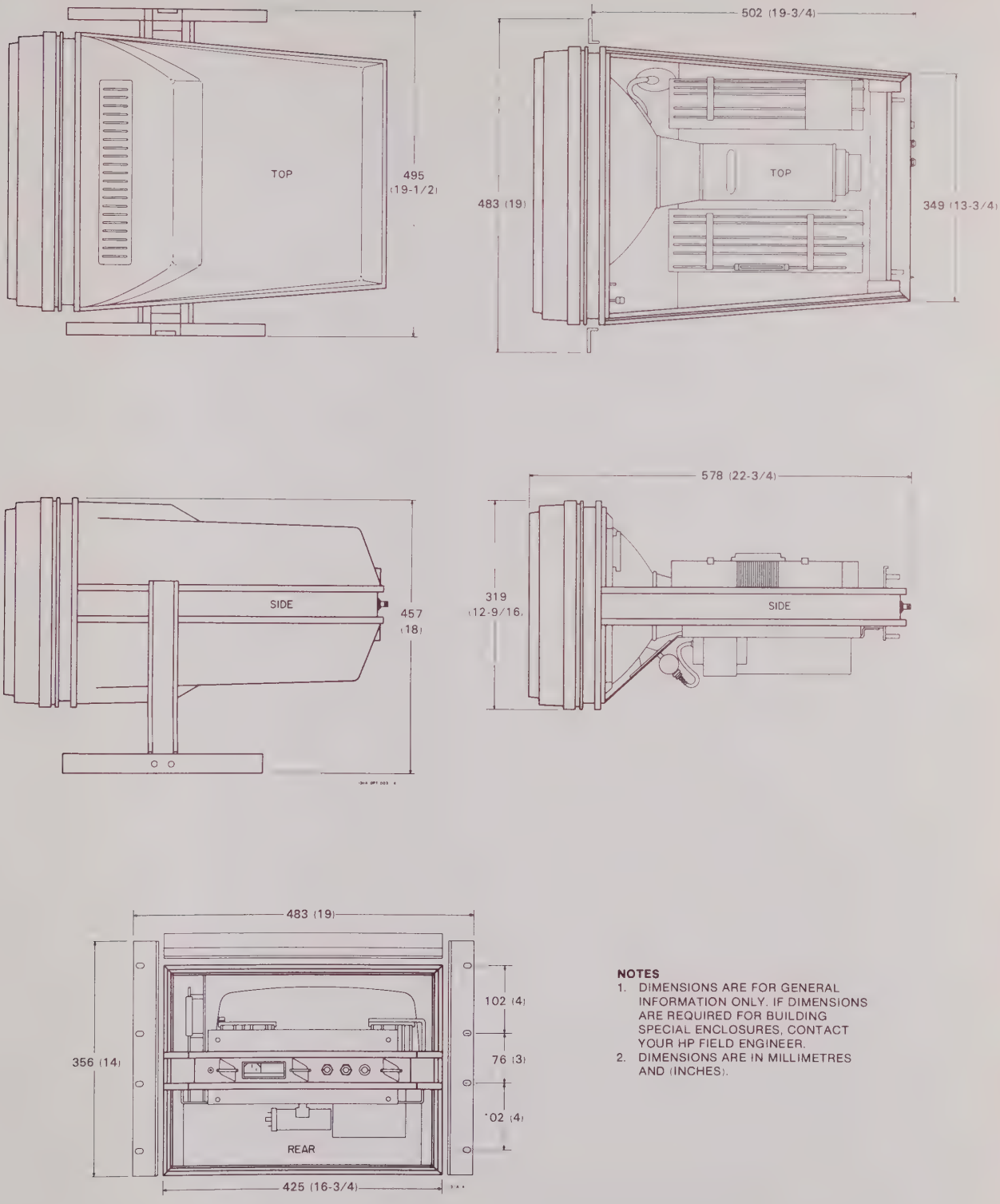

NOTES

1. DIMENSIONS ARE FOR GENERAL INFORMATION ONLY. IF DIMENSIONS ARE REQUIRED FOR BUILDING SPECIAL ENCLOSURES, CONTACT YOUR HP FIELD ENGINEER.
2. DIMENSIONS ARE IN MILLIMETRES AND (INCHES).

Figure 1-2. Dimensional Detail, 1311B

1-19. OPTIONS.

1-20. Standard options are modifications installed on HP instruments and are available on request. Table 1-3 lists available options for the 1311B.

Table 1-3. Standard Options

Option	Description
001	Delete tilt stand and add a rack mount kit.
002	Delete tall tilt stand and add a short tilt stand.
003	Delete contrast control and add brightness control
004	Delete front panel bezel, contrast filter and tilt stand.
330	UL Listed for medical and dental equipment (UL 544).
604	P4 phosphor, aluminized, open graticule CRT in lieu of P31.
639	P39 phosphor, aluminized, open graticule CRT in lieu of P31.
910	Extra set of manuals.

1-21. ACCESSORIES SUPPLIED.

1-22. The following accessories are supplied with the 1311B.

One Operating and Service Manual
One AC line cord (for HP Part No. refer to Section II)
One Tilt Stand

1-23. ACCESSORIES AVAILABLE.

1-24. The following equipment is available for the 1311B:

1 metre four-coax cable HP Model 52125A
10 metre four-coax cable HP Model 52124A
Rack mount slide kit, HP Stock No. 01311-68704
Rack mount pivoting slide kit, HP Stock No. 01311-68705
Rack mount kit, HP Stock 01311-68701

1-25. RECOMMENDED TEST EQUIPMENT.

1-26. Equipment required to test the 1311B performance is listed in table 1-4. Other equipment may be substituted if it meets or exceeds the critical specifications listed in the table.

Table 1-4. Recommended Test Equipment

Instrument Type	Recommended Model	Required Characteristics	Required For
Monitor Oscilloscope	HP Model 1740A with two 10041A Probes	Bandwidth: 100 MHz Dual Channel	Adjustments
50:1 Divider Probe	HP Model 10002A	Shunt Capacitance; 2.5 pF Resistance 9 MΩ Max. dc Volts 1000 V	Adjustments
Function Generator	HP Model 3312A	Output Waveforms: sine, square, ramp Frequency Range: 1 Hz-10 MHz Square Wave Rise Time: 10% to 90% <18 ns Sine Wave Distortion: <.5% Output Impedance: 50Ω Output Level: 20 V p-p into open circuit, 10 V p-p into 50Ω DC offset	Adjustments Performance Checks
Pulse Generator (Qty 2)	HP Model 8013B	Rep Rate; 1 Hz to 10 MHz Output Impedance: 50Ω Output Level: app. 10 V across 50Ω	Adjustments Performance Checks
Digital Voltmeter	HP Model 3465B	Voltage Range: -15 V to 250V Accuracy: 0.1% Input Resistance: 10 MΩ	Adjustments
1000:1 Divider Probe	HP Model 34111A	Voltage Rating: 10 kV	Adjustments
HP-IB Controller	HP Model 9825B	23K byte R/W memory Equipped with: 98210A String Advance Program ROM 98214 Extended I/O ROM 98034A HP-IB Interface	Adjustments
	or		
	HP Model 85A	16K byte R/W memory Equipped with: 82936A ROM Drawer I/O ROM (00085-15003) 82937A HP-IB Interface	
Graphics Generator	HP Model 1351A	52104A HP-IB Interface	Adjustments
Binary Z-Input Cable	HP Part No. 8120-2739	Four Conductor Cable terminated at both ends by 25-pin male "D" type connectors Pins 4, 5, 15, and 17 interconnected.	Adjustments

SECTION II

INSTALLATION

2-1. INTRODUCTION.

2-2. This section provides installation instructions for the Model 1311B X-Y Display. This section also includes information about initial inspection and damage claims, preparation for use, and storage and shipment.

WARNING

To avoid hazardous electrical shock, do not perform electrical tests when there are signs of shipping camage to any poriton of the front or rear panel, or outer covers. Also, read the Safety Summary at the front of this manual before installing or operating the instrument.

2-3. INITIAL INSPECTION.

2-4. Inspect the shipping container for damage. If the shipping container or cushioning material is damaged, it should be kept until the contents of the shipment have been checked for completeness and the instrument has been checked mechanically and electrically. The contents of the shipment should be as listed in the "Accessories Supplied" paragraph in section I. Procedures for checking electrical performance are given in Section IV. If the contents are incomplete, if there is mechanical damage or defect, or if the instrument does not pass the Performance Tests, notify the nearest Hewlett-Packard office. If the shipping container is damaged, or the cushioning material shows signs of stress, notify the carrier as well as the Hewlett-Packard office. Keep the shipping material for carrier's inspection. The HP office will arrange for repair or replacement at HP option without waiting for claim settlement.

2-5. PREPARATION FOR USE.

WARNING

Read the Safety Summary in the front of this manual before installing or operating this instrument.

2-6. POWER REQUIREMENTS. The 1311B requires a power source of 100, 120, 220, or 240 Vac +5%, -10%, single phase, 48 Hz to 440 Hz that can deliver approximately 185 VA (maximum).

2-7. AC LINE VOLTAGE.

CAUTION

Instrument damage may result if both line voltage selection devices are not set for the proper input voltage.

2-8. LINE VOLTAGE SELECTION. The 1311B is normally shipped from the factory with the line selection set for the line voltage used in the country of destination. There are two devices in the line voltage selection process (Figure 2-1). A removable jumper board in the power module provides selection of high or low voltage range operation. Switch S2, mounted above the line input module, provides selection of the specific line voltage. For example if 120 Vac operation is desired, the jumper board position is selected for low range operation (115/120), and S2 is set to the 120/240 position. To operate the instrument from a power source other than 120 Vac, disconnect power cord and proceed as shown in Figure 2-2.

CAUTION

Before placing the instrument in operation, ensure that the operating voltage visible in the power module window (Figure 2-1) agrees with the line voltage being used. The power supplies may be damaged if the line voltage selection is incorrect.

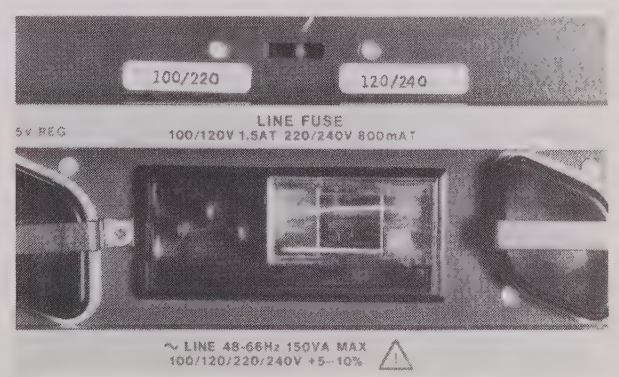

Figure 2-1. Line Voltage Selection Switches

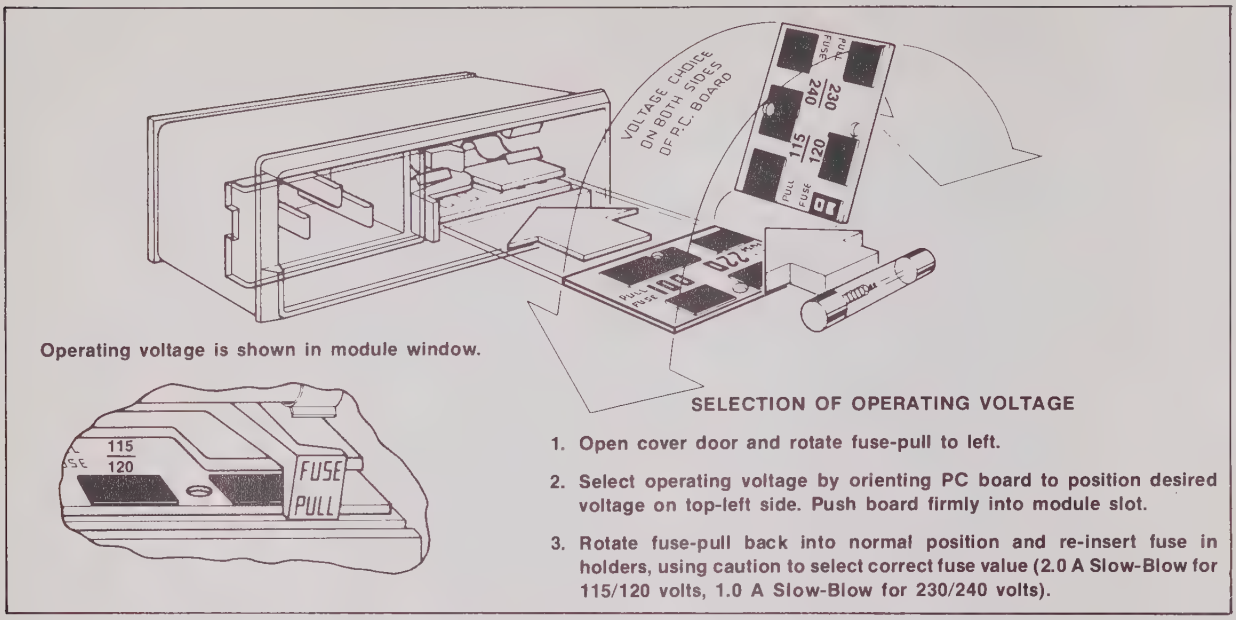

Figure 2-2. Rear Panel Power Module

2-9. AC POWER CABLE. This instrument is equipped with a three-wire power cable. When connected to an appropriate ac power receptacle this cable grounds the instrument cabinet. The type of power cable plug shipped with each instrument depends on the country of destination. Power cables (and associated option numbers) are listed at the end of the parts list in Section VI.

2-10. OPERATING ENVIRONMENT.

2-11. TEMPERATURE. The instrument may be operated in temperatures from 0° C to +55° C (+32 F to +130 F).

2-12. HUMIDITY. The instrument may be operated in environments with humidity up to 95%. However, the instrument should also be protected from temperature extremes which cause condensation within the instrument.

2-13. Altitude. The instrument may be operated at altitudes up to 4600 m (15,000 ft.).

2-14. STORAGE AND SHIPMENT.

2-15. Environment. The instrument may be stored or shipped in environments within the following limits:

Temperature	−40° C to +70° C
Humidity	Up to 95% at 40° C
Altitude	Up to 7600 m (26,000 ft.)

The instrument should also be protected from temperature extremes which cause condensation within the instrument.

2-16. PACKAGING.

2-17. Original Packaging. Containers and materials identical to those used in factory packaging are available through Hewlett-Packard offices. If the instrument is being returned to Hewlett-Packard for servicing, attach a tag indicating the type of service required, return address, model number, and full serial number. Also mark the container FRAGILE to ensure careful handling. In any correspondence, refer to the instrument by model number and full serial number.

2-18. Other Packaging. The following general instructions should be used for re-packing with commercially available materials:

a. Wrap instrument in heavy paper or plastic. (If shipping to Hewlett-Packard office or service center, attach tag indicating type of service required, return address, model number, and full serial number.)

b. Use strong shipping container. A double-wall carton made of 350-pound test material is adequate.

c. Use a layer of shock-absorbing material 70 to 100 mm (3 to 4 inch) thick around all sides of the instrument to provide firm cushioning and prevent movement inside container. Protect control panel with cardboard.

d. Seal shipping container securely.

e. Mark shipping container FRAGILE to ensure careful handling.

f. In any correspondence, refer to instrument by model number and full serial number.

SECTION III

OPERATION

3-1. INTRODUCTION.

3-2. This section contains information and instructions for operating the HP Model 1311B. It applies verbatim, only to the standard instrument.

3-3. PANEL FEATURES.

3-4. The instrument is intended for use as a general purpose graphic display. It is an X, Y, Z display with analog voltage inputs for X, Y, and Z-axis controls, as well as binary grey shade control. A TTL Blanking input is also provided. All signals must be externally supplied through rear-panel connection. Intensity, focus, X-position, Y-position, astigmatism, X-gain, Y-gain and trace align controls are adjustments accessible from the front panel.

3-5. CONTROLS AND CONNECTORS.

3-6. Front and rear panel controls and connectors are described in figure 3-1. Description numbers match the numbers on the illustration. The following paragraphs explain the switches located on printed circuit boards.

WARNING

Dangerous voltages capable of causing serious injury or death are present in this instrument. The following internal switches should be set by qualified personnel only.

3-7. INPUT IMPEDANCE SWITCHES. The input imped nce selector switches permit selection of either 50Ω or 10 KΩ for the X, Y, and Z axis amplifiers. A1S1 controls the X amplifier, A3S1 controls the Y axis amplifier, and A5S1 controls the Z axis amplifier.

3-8. PHOSPHOR PROTECTION. The Phosphor Protection switch (A8S1) is located on the right connector board (A8). This switch either enables or disables the phosphor protection circuit.

3-9. PREOPERATIONAL PROCEDURE.

WARNING

Before the instrument is switched on be sure that the power cord protective earth ground is connected (through the ac power cable to ac outlet). any interruption of the protective earth grounding may cause a potential shock hazard that could result in personal injury.

CAUTION

Before the instrument is switched on, it must be set to the voltage of the power source. The instrument is set by the factory to the voltage used in the country of shipping destination. If a different power source is to be used, refer to SECTION II for proper switch settings and fuse type.

WARNING

DO NOT REMOVE COVERS. Internal parts present an electrical shock hazard. Refer servicing to qualified service personnel.

3-10. The Preoperational checks apply directly only to the standard instrument. Prepare the 1311B for operation as follows:

a. Set INTENSITY (10) fully counterclockwise.

b. Set horizontal and vertical POSITION controls (5) (7) to midrange.

c. Turn line switch (I) on. Power indicator lamp should light.

CAUTION

A high-intensity display over an extended period will burn the CRT phosphor.

d. Adjust INTENSITY (10) for a dimly visible spot.

e. Adjust Y POSITION (7) through its full range. Display spot will move vertically on CRT, disappearing from the viewing area at either extreme of the control. Center the Y POSITION control.

f. Adjust X POSITION (5) through its full range. Display spot will move horizontally on CRT, disappearing from the viewing area at either extreme of the control. Center the X POSITION control.

g. Adjust FOCUS (1) and ASTIGMATISM (3) controls for smallest, sharpest spot on CRT.

h. Apply a 1 kHz, 1 V p-p sinewave to the X-INPUT (A) connector on rear panel.

i. Adjust TRACE ALIGN (4) to align trace horizontally.

j. Set X-GAIN (6) for a trace length of exactly 25.4 cm (10 in.).

k. Apply a 1 kHz, 1 V p-p sinewave to the Y-INPUT (B) connector on rear panel and adjust ORTHOG control to cause the trace to lie perpendicular to the X-axis.

l. Set Y-GAIN (8) for a trace length of exactly 25.4 cm (10 in.).

FRONT PANEL

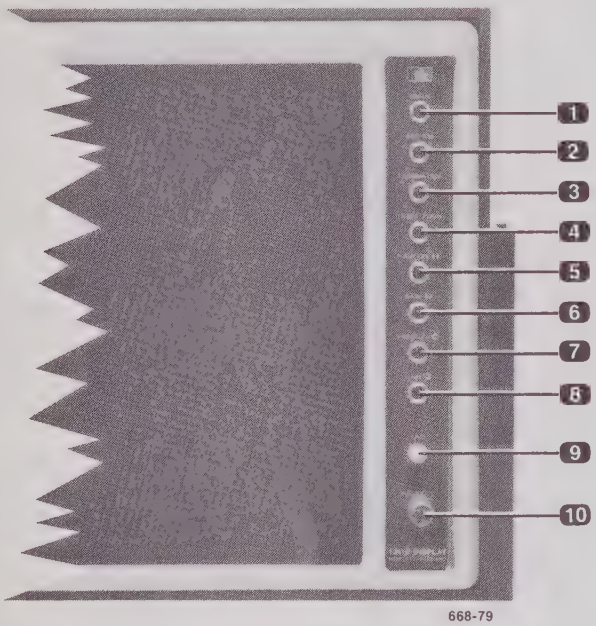

1. **FOCUS.** Focuses the trace; used in conjunction with ASTIG control to provide the sharpest CRT display.
2. **ORTHOGONAL.** Used to adjust perpendicularity of X and Y traces. Used in conjunction with TRACE ALIGN control.
3. **ASTIGMATISM.** Control which adjusts the roundness of the spot.
4. **TRACE ALIGN.** Rotates X and Y traces about screen center. Aligns Y trace to vertical graticule line and X trace to horizontal graticule line. Used in conjunction with ORTHOG control which aligns vertical trace perpendicular to horizontal trace.
5. **POSN X.** Adjusts the trace position horizontally.
6. **GAIN X.** Adjustment for varying the gain of the X-amplifier. Gives 1.75:1 range of adjustment.
7. **POSN Y.** Adjusts the trace position vertically.
8. **GAIN Y.** Adjustment for varying the gain of the Y-amplifier. Gives 1.75:1 range of adjustment.
9. **POWER ON.** Light indicating power is applied to the instrument.
10. **INTENSITY.** Adjusts the brightness of the display.

NOTE

The INTENSITY control will have very little effect on the dot brightness in the absence of a Z-axis input signal.

REAR PANEL

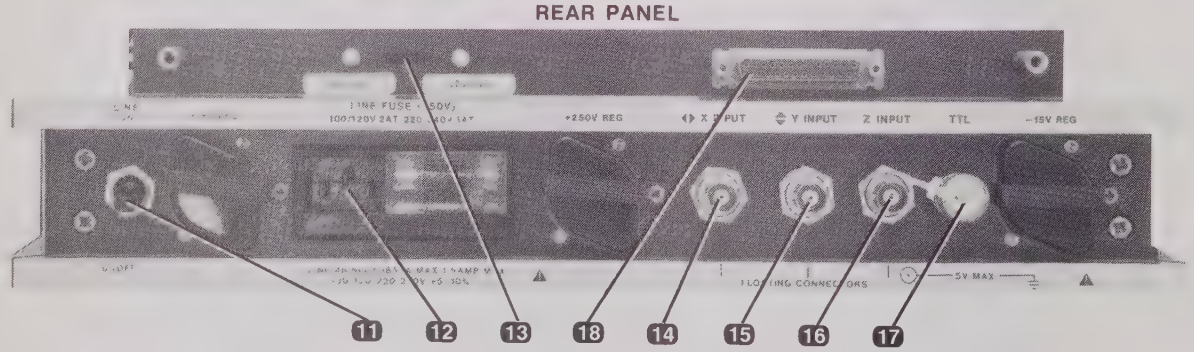

11. **POWER ON switch.** Applies ac power to the instrument.
12. **INPUT ac power cord connector.**
13. **LINE VOLTAGE SELECT.** Selects line voltage for 100/220 or 120/240 V operation.
14. **X INPUT.** X-axis input connector.
15. **Y INPUT.** Y-axis input connector.
16. **Z INPUT.** Z-axis input connector.
17. **TTL INPUT.** TTL input connector for Z-axis control.
18. **Z-AXIS GRAY SHADE INPUT.**

Figure 3-1. Controls and Connectors

3-11. INTERFACING CONSIDERATIONS.

3-12. GENERAL. Standard sensitivities of the X and Y deflection amplifier are 1 V p-p for full screen deflection. Front panel gain controls for each axis reduce sensitivity to 1.75 V p-p for full screen deflection. X-Y deflection amplifiers may be configured for either single ended or differential operation. Input polarity may be reversed by changing components at the input of the X and Y amplifiers and by interchanging the input cable connections on the rear edge of the input amplifier board (A1 for X amplifier and A3 for Y amplifier). The input impedance selector switches permit selection of either 50Ω or 10 KΩ for the X, Y, and Z axis amplifiers. A1S1 controls the X amplifier, A3S1 controls the Y amplifier, and A5S1 controls the Z axis amplifier.

3-13. TTL BLANKING. As configured by the factory, a TTL logic 1 (≥2.5 volts) will blank the CRT beam. When returned to a TTL logic 0 (≤.8 volts) the beam is returned to analog control. The sense of this TTL blanking may be reversed by moving the TTL jumper (see Service Sheet 4) from the Standard (TTLS) position to the Negative (TTLN) position. No calibration need be performed for this configuration.

3-14. BINARY GRAY SHADE. Varying beam intensities may be digitally implemented by presenting a 3 bit TTL logic level word to the BINARY Z-INPUT. This allows the programmer the option of highlighting or subduing aspects of the display. See table 3-1 for binary to intensity relationships. "WX" commands are shown for display systems using the HP Model 1351A Graphics Generator.

Table 3-1. Binary Gray Shades

Binary Word	HP 1351A Command NO BLINK/BLINK*	Beam Intensity
000	WX0/WX8	Brightest
001	WX1/WX9	2nd "
010	WX2/WX10	3rd "
011	WX3/WX11	4th "
100	EX4/WX12	5th "
101	WX5/WX13	6th "
110	WX6/WX14	Dimmest
111	WX7/WX15	Blanked

*HP 1351A I/O Board Blink Switch "on".

3-15. OPTION 003 (INTENSITY AS BRIGHTNESS). As configured by the factory, INTENSITY controls the screen contrast. It is in this configuration for which the Binary Gray Shades are intended. If this feature is not used, Option 003 configures INTENSITY to control screen brightness. To obtain the Option 003 configuration, refer to Service Sheet 4 and move the Standard Intensity jumper (marked INT S) to the Option 003 (marked INT O) position. The adjustment procedure for this option must now be performed. Refer to Section 5-14.

3-16. ATTENUATORS. The 1311B provides full scale X-axis and Y-axis deflection when a 1 V p-p signal is applied to either input. A front-panel GAIN control for each axis reduces sensitivity to 1.75 V p-p for full screen deflection. Attenuators may be added to provide full-scale deflection for input voltages up to ±50 Vdc + peak ac with 10 KΩ internal termination on ±5 V + peak ac with 50Ω internal termination. Space and pads are provided on the X-Y circuit boards for adding attenuators. (See Service Sheet 2 in Section VIII.) Regardless of input attenuation, range of the GAIN control is constant at a ratio of 1.75:1.

3-17. POLARITY. In a standard display, a positive going voltage deflects the beam to the right when applied to the X input center conductor, or up when applied to the Y input center conductor. To change polarity, switch the positions of A1(A3) R2 and A1(A3) R3 and interchange the input cable connections on the rear edge of the input amplifier board. When mounting the display physically inverted, interchange the CRT deflection plate connections to retain the sense of the position controls and maintain correct input polarity.

3-18. BANDWIDTH REDUCTION. In some cases, the full 5 MHz bandwidth of the deflection amplifier is not needed; in fact, in some applications it may be desirable to reduce the bandwidth to eliminate system noise problems. If the desired bandwidth is approximately 1 MHz or greater, the deflection amplifier can be modified internally by increasing the value of A1C8 and A1C9 for X-amplifier and A3C8 and A3C9 for the Y-amplifier. For a desired 3 dB bandwidth f, the value of C8 and C9 can be calculated with the equation:

$$C = \frac{1}{2 \pi fo R}$$

Where:

fo = -3 dB bandwidth desired
R = shunt resistance (in this case 1000Ω)
C = required capacitance

NOTE

This formula gives accurate results for bandwidth frequencies below 1 MHz. Above this frequency, other factors also influence the bandwidth; therefore, experimentation is necessary to achieve proper value. Use capacitors that do not exceed 1600 pf ±5% (or better).

3-19. RINGING. Ringing is one possible undesirable side effect of improperly terminated inputs. For instance, an abrupt transition from blanked to unblanked in an improperly terminated Z-axis input line may cause ringing which will appear as intensity fluctuation in the display. For minimum induced crosstalk and ringing, displays connected in parallel should be connected as shown in figure 3-2.

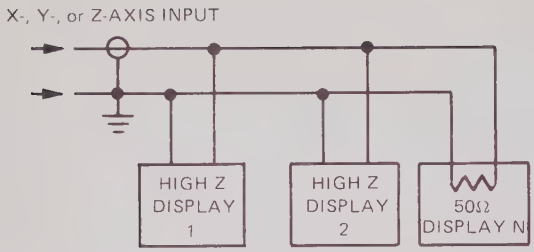

Figure 3-2. Input Termination Impedance of Displays Connected in Parallel

3-20. PERFORMANCE FACTORS. Major performance factors, and their meaning, how they are determined, and how they affect system performance are explained in the following paragraphs.

3-21. SPOT SIZE AND RESOLUTION. If you scan a CRT spot with a microscope photometer and plot brightness versus distance (along spot width), the result approximates a Gaussian curve (see figure 3-3). Spot size is the width of the Gaussian curve at its 50% point (see Section I, table 1-1).

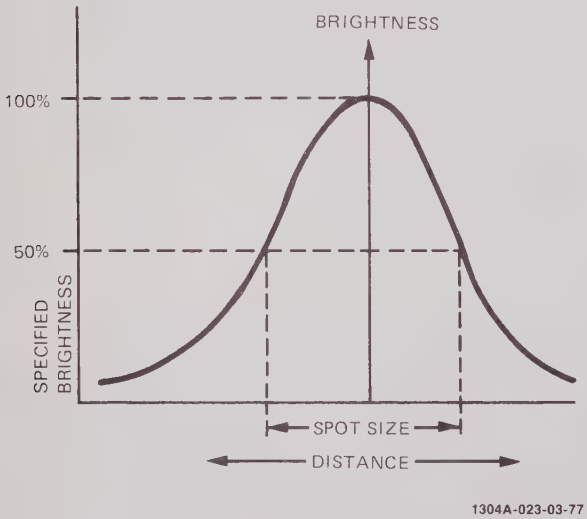

Figure 3-3. Brightness Versus Cross Section of Typical CRT Spot

3-22. In practice, the 50% point can be determined by using the shrinking raster measurement method. The shrinking raster measurement is obtained by displaying a raster of lines (or dots) on the CRT and then adjusting the vertical and horizontal gain until the individual lines (or dots) are no longer individually identifiable. The size of the raster is then divided by the number of lines in the raster to determine the spot size. The point where raster lines (or dots) merge is the theoretical 50% point on the Gaussian curve.

3-23. The shrinking raster method should be used if a scanning microscope photometer is not available, because observing an individual line (or dot) with an optical comparator can be very misleading. On a single dot, the eye can see to about the 3% point on the Gaussian curve. Here the dot appears to be approximately twice the width it is across the 50% points.

3-24. BRIGHTNESS. Brightness is specified only with respect to a specific combination of writing speed, refresh rate, and phosphor (P31 for 1311B). Maximum brightness for other given conditions can be calculated using the following formula:

Where:

$$Bmax = (5.6\ fl)\left(\frac{0.1}{W}\right)\left(\frac{R}{60}\right) EP$$

5.6 fl = specified brightness

W = writing speed in inches per microseconds

EP = phosphor efficiency (relative to P31): P4 and P39 50%.

R = refresh rate in Hz.

3-25. For measuring brightness, two points should be remembered: (1) specific brightness is not measured in radiometric units but in photometric units which are normalized to the spectral response of the human eye, and (2) brightness is directly proportional to the refresh rate and inversely proportional to writing speed.

3-26. The brightness of a spot in a display that is made up of dots may be determined by using the following formula when the dot refresh rate and the pulse width used to generate the dots are known:

$$B = (B\ spec)\left(\frac{(Ws)}{Rs\ Ds\ Cd}\right)$$

Where:

B = minimum spot brightness at full intensity and/or maximum Z-axis input level.

B spec = specified line brightness.

Ws = writing speed at which line brightness is specified.

Rs = refresh rate at which line brightness is specified.

Ds = specified spot diameter.

Cd = duty cycle calculated from: Z-axis pulse width × refresh rate.

3-27. SETTLING TIME. Settling time is defined as the elapsed time between an input step command and the time for the beam to settle within a specified tolerance to its final position (see figure 3-4). Settling time must be taken into account when moving the beam from one location to another. Otherwise, there may be tails on dots or line distortions at the starting point of vectors.

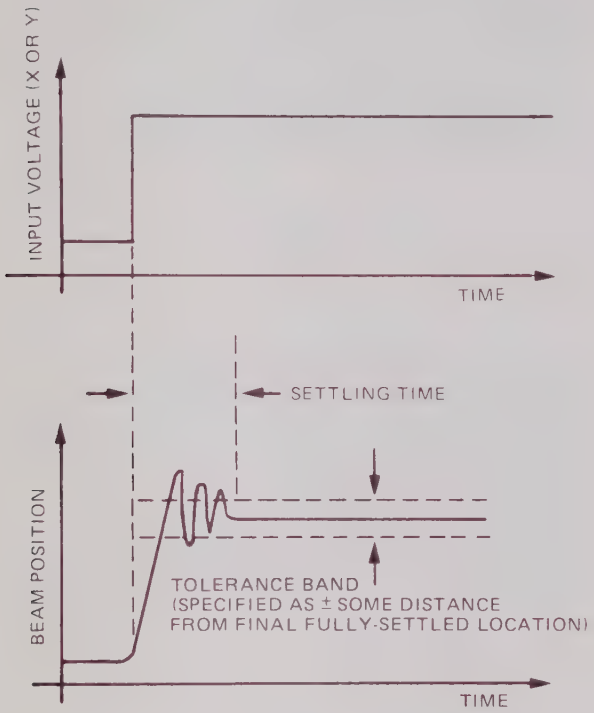

Figure 3-4. Setting Time

3-28. LINEARITY. Linearity (see figure 3-5) refers to the linearity to the relationship between the X or Y input voltage and the beam position.

NOTE

Linearity is specified only along the CRT's major axes.

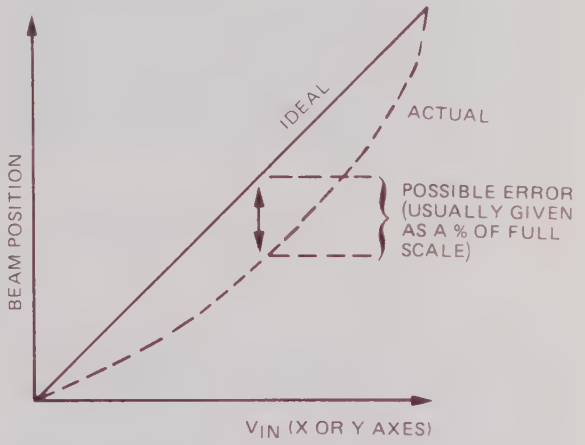

Figure 3-5. Linearity of Beam Position Showing Ideal Position and Possible Error

3-29. OPERATOR MAINTENANCE.

3-30. Operator maintenance should be limited to exterior cleaning of the instrument. Smooth metal surfaces can be cleaned with a commercial glass cleaner. Stubborn residues can be removed with a mild liquid household detergent. The CRT filter should be cleaned only with isopropyl alcohol.

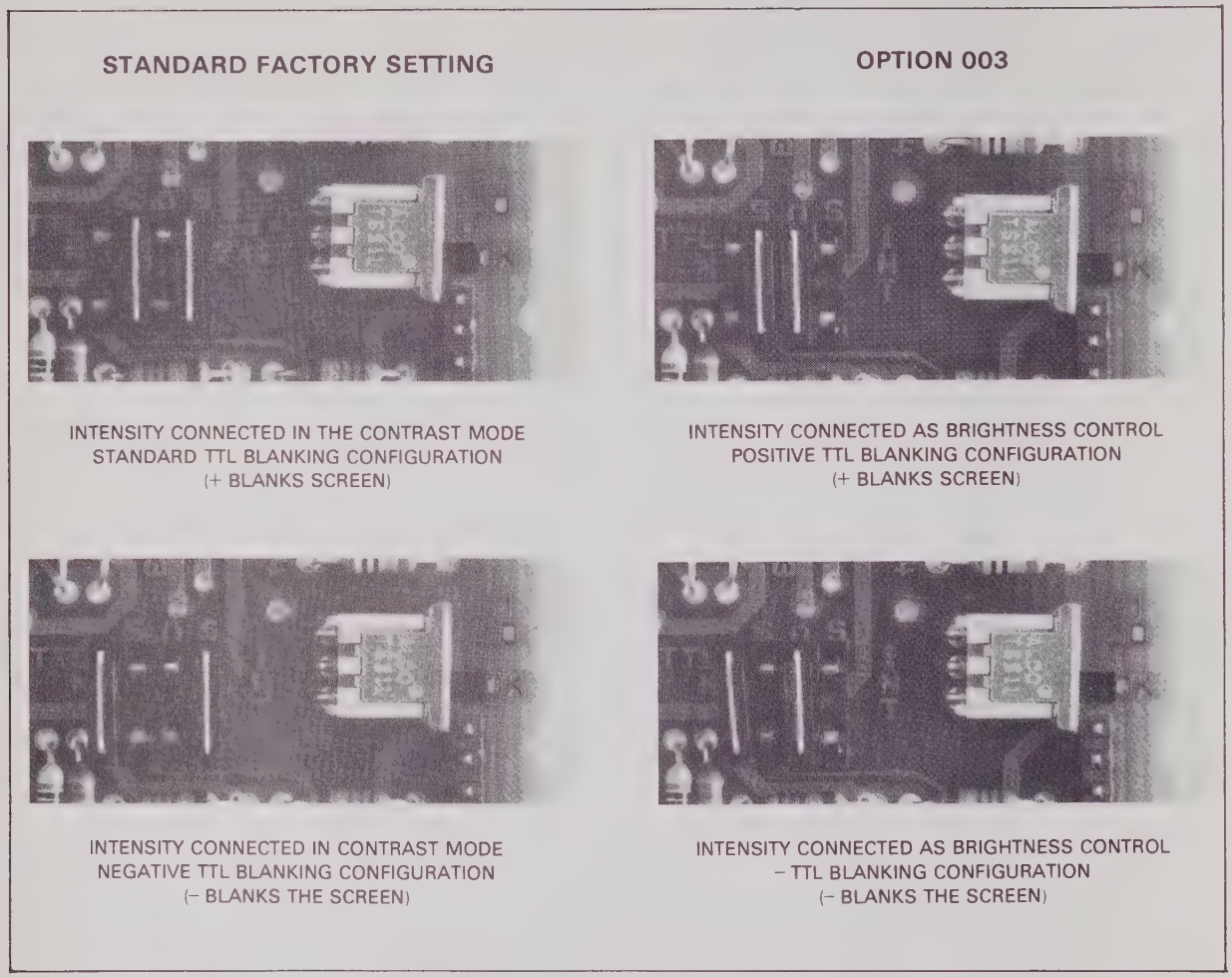

Figure 3-6. Jumper Connections for TTL Blanking and Intensity (A5E5-A5E8)

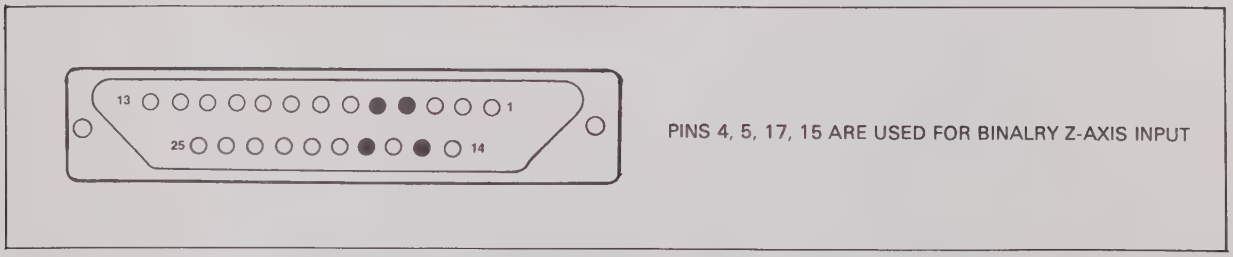

Figure 3-7. Binary Z-Axis Input Connector, J6

SECTION IV

PERFORMANCE TESTS

4-1. INTRODUCTION.

4-2. The procedures in this section test the instrument's electrical performance using the specifications of table 1-1 as the performance standards. All tests can be performed without access to the interior of the instrument.

4-3. EQUIPMENT REQUIRED.

4-4. Equipment required for the performance tests is listed in section I, table 1-4. Any equipment that satisfies the critical specifications given in the table may be substituted for the recommended models.

4-5. TEST RECORD.

4-6. Results of the performance test may be tabulated on the Performance Test Record at the end of this section. The test record lists the tested specifications and their acceptable limits. The results recorded at incoming inspection can be used for comparison in periodic maintenance, troubleshooting, and after repairs or adjustment.

4-7. CALIBRATION CYCLE.

4-8. Periodic performance verification is not normally required for this instrument. The performance checks should be made after service work has been performed or if improper operation is suspected.

4-9. Further checks that require access to the inside of the instrument are included in the adjustment section, but they are not required checks.

NOTE

The following Performance Tests are written for the standard instrument only. If optional attenuators have been installed or input polarities changed, readjust all input signals accordingly.

PERFORMANCE TESTS

4-10. AMPLIFIER BANDWIDTH.

SPECIFICATION:
DC to 5 MHz (3 dB down at 5 MHz).

DESCRIPTION:
A function generator is used to provide the reference signal. A monitor oscilloscope is used to check for a constant signal at the display input connectors.

EQUIPMENT REQUIRED:
Function Generator
Monitor Oscilloscope

PROCEDURE:
a. Connect equipment as shown in figure 4-1.

b. Apply a 600 mV, 50 kHz sine wave from function generator to the X-INPUT.

c. Readjust the output of the function generator for exactly 12.7 cm (5 in.) of deflection.

d. Note the above signal level on the monitor oscilloscope.

e. Change signal frequency to 5 MHz and readjust output of function generator for the same signal level obtained in step d.

f. The amplitude measured on the display should be equal to or greater than 9.4 cm (3.7 in.).

For Y-amplifier bandwidth, apply the function generator output to the Y-INPUT and repeat steps b through f.

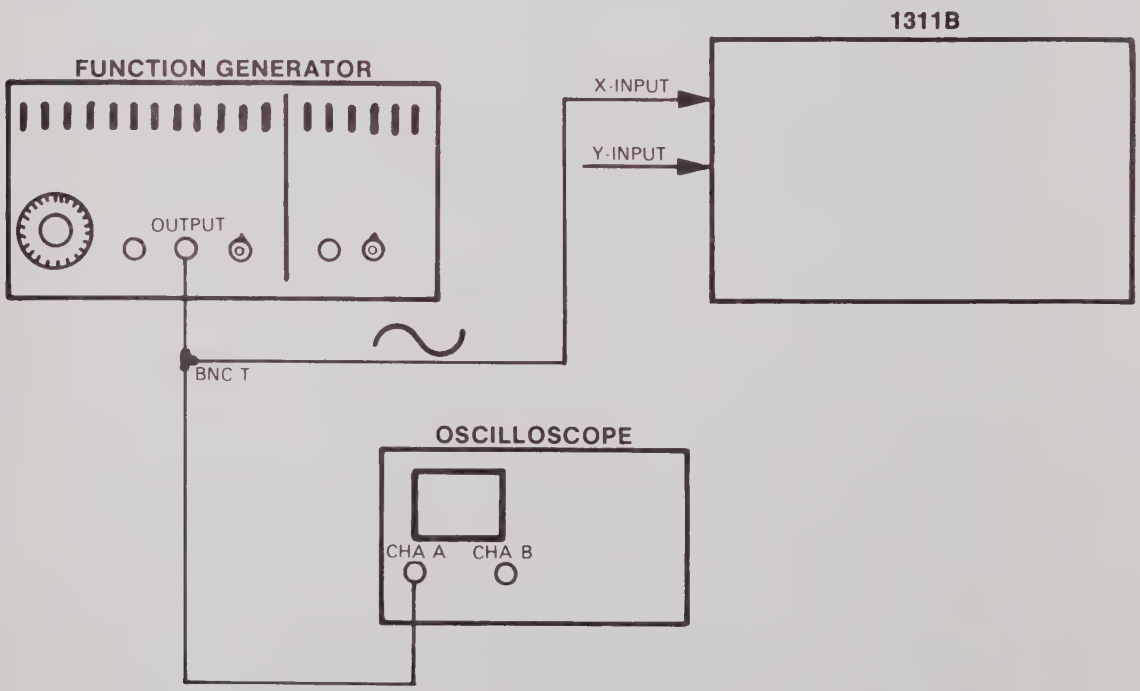

Figure 4-1. Amplifier Bandwidth Test Setup

PERFORMANCE TESTS

4-11. X-DEFLECTION FACTOR.

SPECIFICATION:
Gain must be variable from 39.4 mV/cm (100 mV/in.) to 68.9 mV/cm (175 mV/in.).

DESCRIPTION:
The X-GAIN control must vary the trace length from 14.5 cm (5.7 in.) to 25.4 cm (10 in.) with an input signal of 1 V.

EQUIPMENT REQUIRED:
Function Generator
Monitor Oscilloscope

PROCEDURE:
a. Connect equipment as shown in figure 4-2.

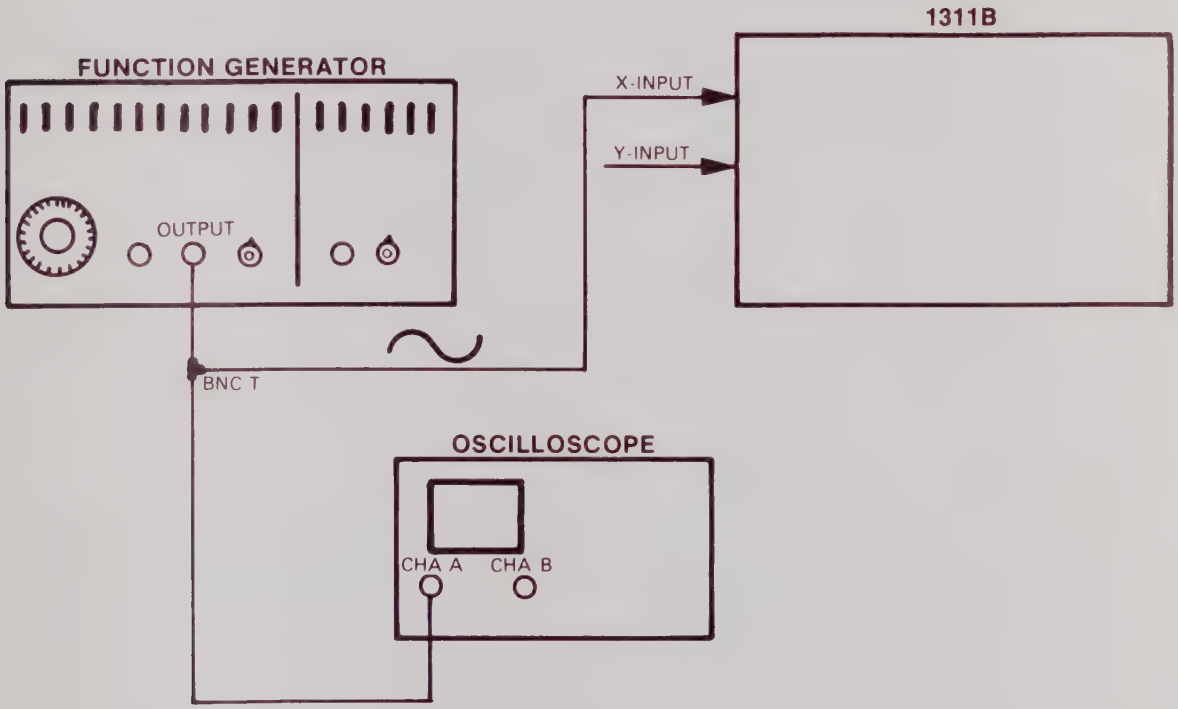

Figure 4-2. X-deflection Factor Test Setup

b. Adjust output of function generator for 1 V, 1 kHz sine wave (check function generator amplitude with monitor oscilloscope).

c. Turn front panel X-GAIN control fully counterclockwise and check for a trace length of <14.5 cm (5.7 in.).

d. Rotate the X-GAIN control fully clockwise and check for a trace length of >25.4 cm (10 in.).

PERFORMANCE TESTS

4-12. Y-DEFLECTION FACTOR.

SPECIFICATION:
Gain must be variable from 39.4 mV/cm (100 mV/in.) to 68.9 mV/cm (175 mV/in.).

DESCRIPTION:
The Y-GAIN control must vary the trace length from 14.5 cm (5.7 in.) to 25.4 cm (10 in.) with an input signal of 1 V.

EQUIPMENT REQUIRED:
Function Generator
Monitor Oscilloscope

PROCEDURE:
a. Connect equipment as shown in figure 4-3.

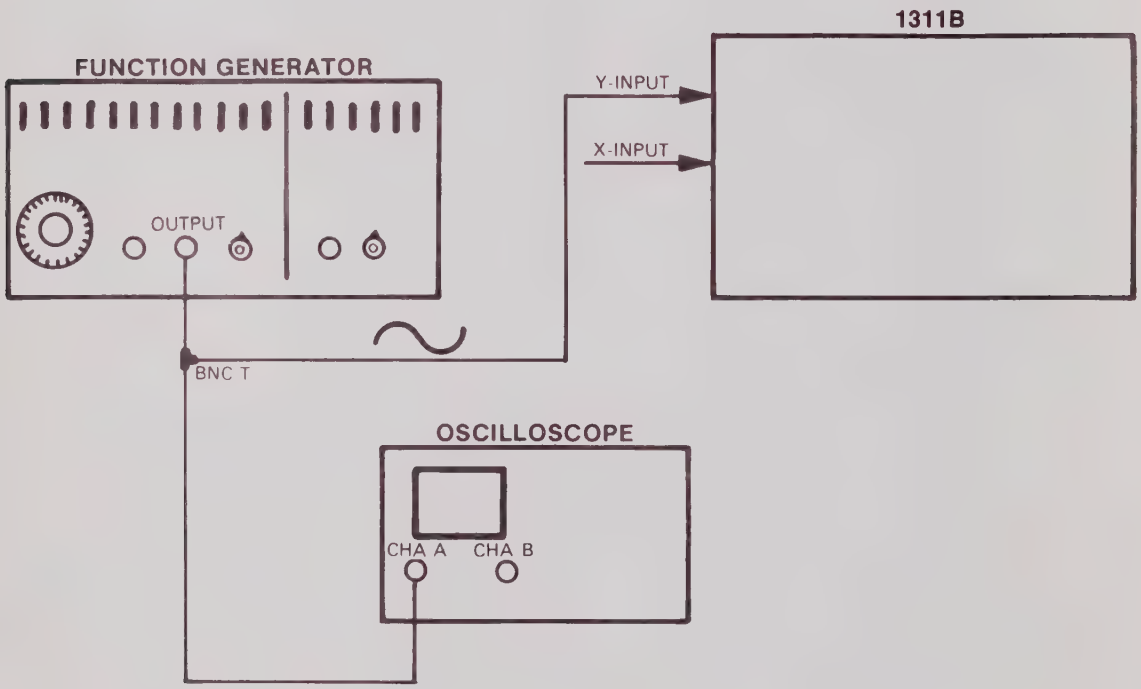

Figure 4-3. Y-deflection Factor Test Setup

b. Adjust function Generator for a 1 V, 1 kHv sine wave (check function generator amplitude with monitor oscilloscope).

c. Turn front panel Y-GAIN control fully counterclockwise and check for a trace length of <14.5 cm (5.7 in.).

d. Rotate the Y-GAIN control fully clockwise and check for a trace length of >25.4 cm (10 in.).

PERFORMANCE TESTS

4-13. REPEATABILITY.

SPECIFICATION:
<0.15% of full screen error in readdressing any point on screen from any other point on screen.

DESCRIPTION:
This test verifies amplifier performance stability with a varying input signal.

EQUIPMENT REQUIRED:
Pulse Generator

PROCEDURE:
a. Connect equipment as shown in figure 4-4.

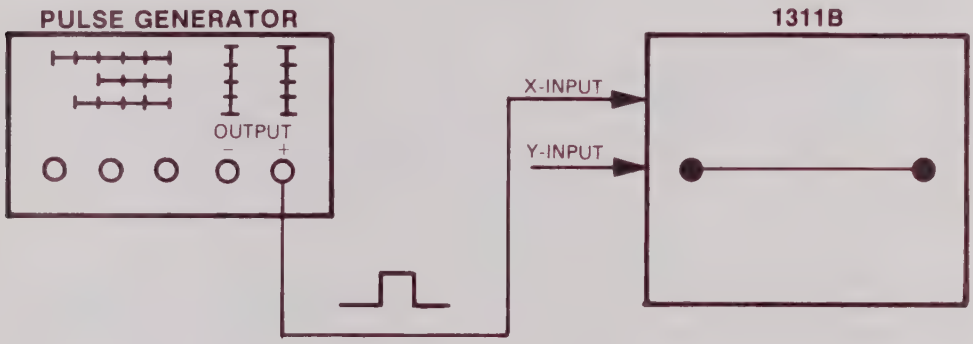

Figure 4-4. Repeatability Test Setup

b. Set frequency of pulse generator for a 10 kHz signal. Adjust display POSITION controls to bring trace on screen. Set pulse generator amplitude for full screen deflection. (See figure 4-4).

c. Vary the frequency of the pulse generator from 1 kHz to 100 kHz and notice the position change of the spot. Spot movement should be less than 1 spot diameter.

d. Disconnect function generator from X-INPUT and reconnect to Y-INPUT.

e. Repeat steps b and c for Y-deflection Amplifier.

PERFORMANCE TESTS

4-14. CROSSTALK.

SPECIFICATION:
<0.38 mm (0.015 in.) with one input terminated in 50Ω and the other input driven by 1 V, 500 kHz signal.

DESCRIPTION:
Crosstalk between deflection amplifiers is determined by measuring tracewidth when one input is terminated in 50Ω or a BNC shorting cap and a 1 V, 500 kHz is applied to the other input.

EQUIPMENT REQUIRED:
Function Generator.

PROCEDURE:
a. Connect equipment as shown in figure 4-5.

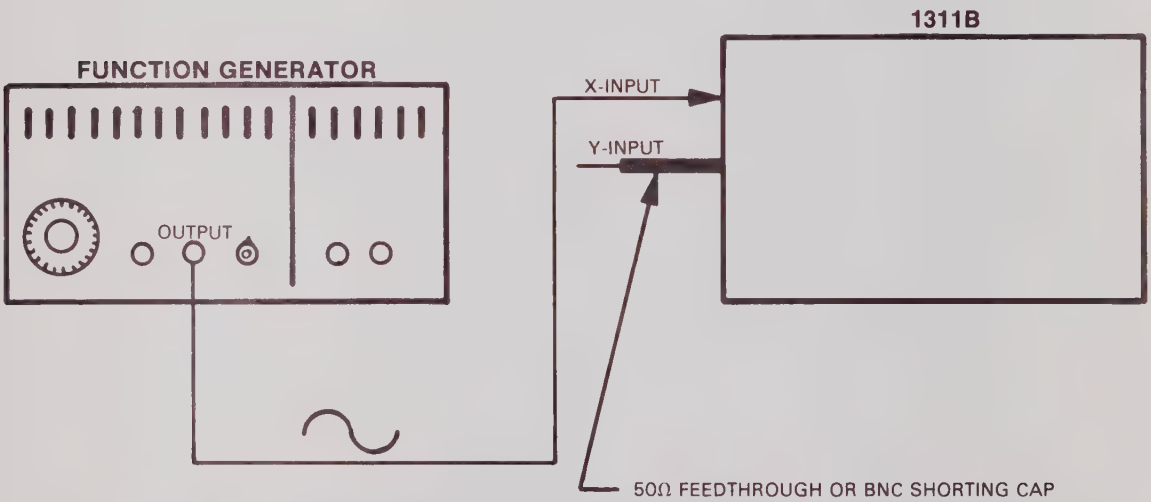

Figure 4-5. Cross Talk Test Setup

b. Apply a 1 V p-p, 500 kHz sine wave from function generator to X-INPUT.

c. Set front panel X and Y GAIN controls fully clockwise and check for no visible change in tracewidth.

d. Reverse connections to X and Y INPUT and repeat steps b and c.

PERFORMANCE TESTS

4-15. Z-AXIS BLANKING POLARITY.

SPECIFICATION:
-1 Vdc (INTENSITY at maximum) blanks trace. 1 Vdc (INTENSITY at minimum) provides maximum trace intensity.

DESCRIPTION:
With INTENSITY set to maximum, a -1 Vdc signal at the Z-INPUT shall blank the CRT. With INTENSITY set to minimum a +1 Vdc signal at the Z-INPUT provides maximum trace intensity.

EQUIPMENT REQUIRED:
Function Generator

PROCEDURE:
a. Connect equipment as shown in figure 4-6.

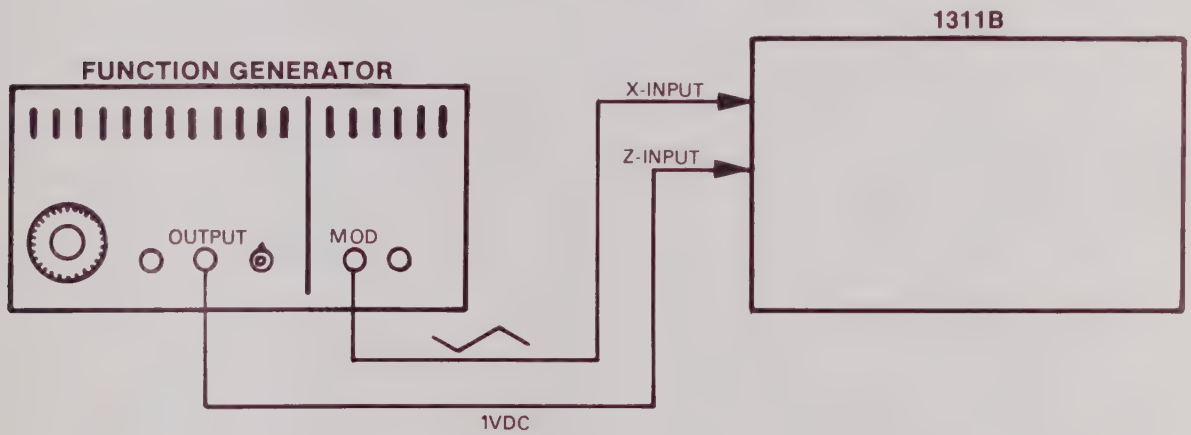

Figure 4-6. Z-axis Blanking Polarity Test Setup

b. Apply +1 Vdc to Z-INPUT and check for maximum trace intensity. INTENSITY control should have no effect on trace brightness.

c. Apply -1 Vdc to Z-INPUT and check for no trace on screen. INTENSITY control should not bring trace on screen.

PERFORMANCE TESTS

4-16. BINARY GRAY SHADE.

SPECIFICATION:
3-bit TTL level input providing 7 gray shades (beam intensities) and blanking.

DESCRIPTION:
The Z-axis board must provide 7 beam intensities as well as a blanked beam when the 3-bit words shown in Table 4-1 are presented to the BINARY Z-INPUT.

Table 4-1. Binary Gray Shades

Binary Word	HP 1351A Command NO BLINK/BLINK*	Beam Intensity
000	WX0/WX8	Brightest
001	WX1/WX9	2nd "
010	WX2/WX10	3rd "
011	WX3/WX11	4th "
100	WX4/WX12	5th "
101	WX5/WX13	6th "
110	WX6/WX14	Dimmest
111	WX7/WX15	Blanked

*HP 1351A I/O Board Blink Switch "on".

PROCEDURE:
a. Set Display INTENSITY Control fully clockwise.

b. Connect equipment as shown in figure 4-7.

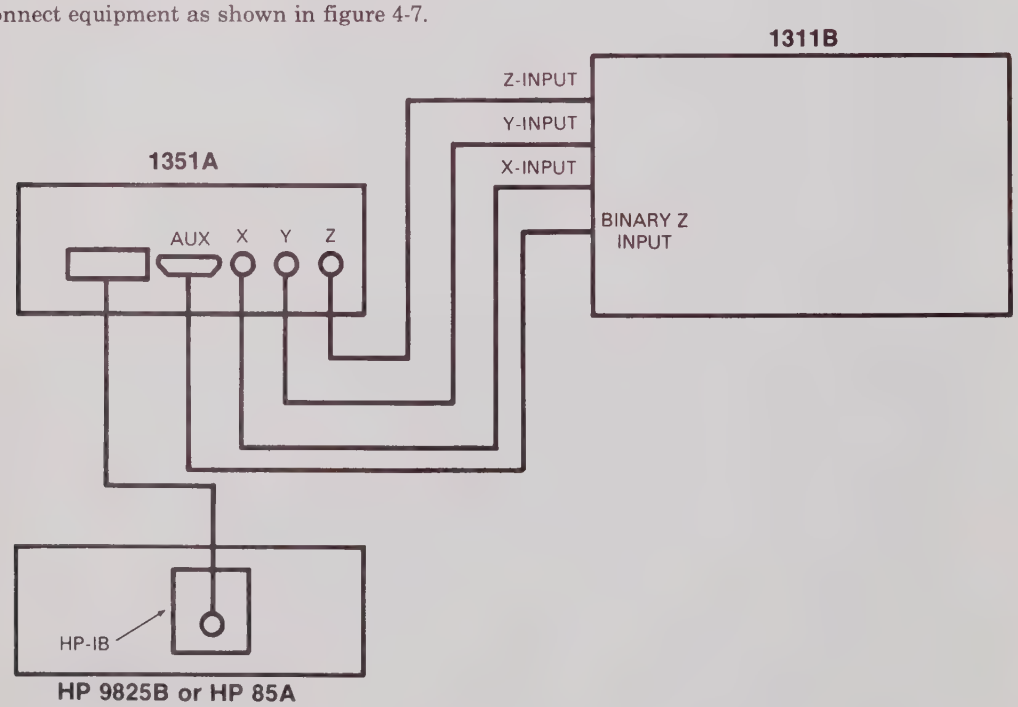

Figure 4-7. Binary Gray Shade Test Setup

c. If using an HP 9825B Desktop Computer, load and run Binary Gray Shade Test Pattern program* shown in table 4-2. If using an HP 85A, load and run the program* shown in table 4-3.

*The program is not available on tape.

PERFORMANCE TESTS

Table 4-2. Binary Gray Shade Test Pattern Program for HP 9825B

```
0: fxd Ø
1: cli 7
2: wrt 718,"em::en::ex::sn::sx::um::"
3: fmt 1,c2,f2.Ø,",::"
4: fmt 2,c8,f4.Ø,",",f4.Ø,";::"
5: 42Ø→X;575→Y
6: wrt 718,"peØ,::pa42Ø,575;::"
7: Ø→A;7→B
8: for H=1 to 2
9: for I=A to B
10: wrt 718.1,"wx",I
11: for J=Ø to 19
12: wrt 718.2,"pe1,::pa",X+J,Y+1ØØ
13: wrt 718.2,"pe1,::pa",X+J+1,Y
14: next J
15: X+2Ø→X
16: next I
17: 8→A;15 →B
18: 42Ø→X;45Ø→Y
19: wrt 718,"peØ,::pa42Ø,45Ø;::"
20: next H
21: wrt 718,"wx8,::pe1,::pa581,45Ø;581,55Ø;421,55Ø;42Ø,45Ø;::"
22: wrt 718,"peØ,::pa581,575;::"
23: wrt 718,"wxØ,::pe1,:pa581,675;421,675;42Ø,575;581,575;::"
24: wrt 718,"peØ,::pa445,685;::pe1,::csØ,::txBINARY Ø-7"
25: wtb 718,3,13,1Ø
26: wrt 718,"peØ,::pa435,415;::pe1,::txBINARY 8—15"
27: wtb 718,3,13,1Ø,"peØ,::"
*16777
```

Table 4-3. Binary Gray Shade Test Pattern Program for HP 85A

```
1Ø FXD Ø
2Ø IMAGE 8A,4D,A,4D,2A
3Ø IMAGE 2A,2D,3A
4Ø RESET 7
5Ø OUTPUT 718 ;"EM:SN:EN:UM:"
6Ø X=42Ø @ Y=575
7Ø OUTPUT 718 ;"PEØ,::PA42Ø,575;:"
8Ø A=Ø @ B=7
9Ø FOR H=1 TO 2
1ØØ FOR I=A TO B
11Ø OUTPUT 718 USING 3Ø ; "WX",I,",::"
12Ø FOR J=Ø TO 19
13Ø OUTPUT 718 USING 2Ø ; "PE1,:PA",X+J,",",Y+1ØØ,";:"
14Ø OUTPUT 718 USING 2Ø ; "PE1,:PA",X+J+1,",",Y,";:"
15Ø NEXT J
16Ø X=X+2Ø
17Ø NEXT I
18Ø A=8 @ B=15
19Ø X=42Ø @ Y=45Ø
2ØØ OUTPUT 718 ;"PEØ,::PA42Ø,45Ø;::"
21Ø NEXT H
22Ø OUTPUT 718 ;"WX8,::PE1,::PA581,45Ø;581,55Ø;421,55Ø;42Ø,45Ø;::PEØ,::PA581,575;::"
23Ø OUTPUT 718 ;"WXØ,:PE1,:PA581,675;421,675;42Ø,575;581,575;::"
24Ø OUTPUT 718 ;"PEØ,::PA445,685;::PE1,::CSØ,::TXBINARY Ø-7",CHR$(3)
25Ø OUTPUT 718 ;"PEØ,::PA435,415;::PE1,::TXBINARY 8-15",CHR$(3)
26Ø OUTPUT 718 ;"PEØ,::"
27Ø END
```

d. Seven blinking and non-blinking beam intensities should be displayed similar to figure 4-8.

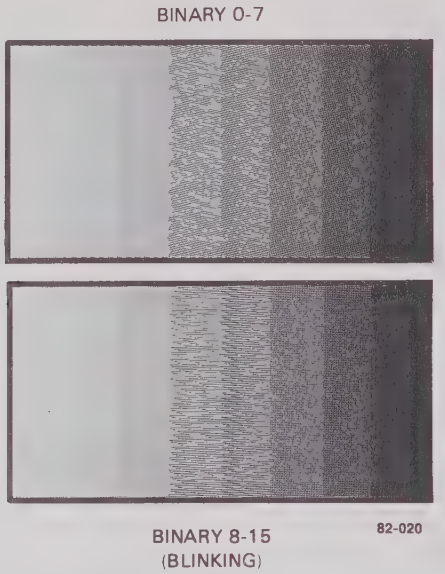

Figure 4-8. Binary Gray Shade Test Pattern

PERFORMANCE TESTS

4-17. SETTLING TIME.

SPECIFICATION:
1 V Input <500 ns.

DESCRIPTION:
The CRT beam, when moved from one position to another, must settle to within 1 spot diameter in less than 500 ns for a 1 V input.

PROCEDURE:
a. Set Display INTENSITY Control fully counterclockwise.

b. Connect equipment as shown in figure 4-9. Do not connect Z-INPUT at this time.

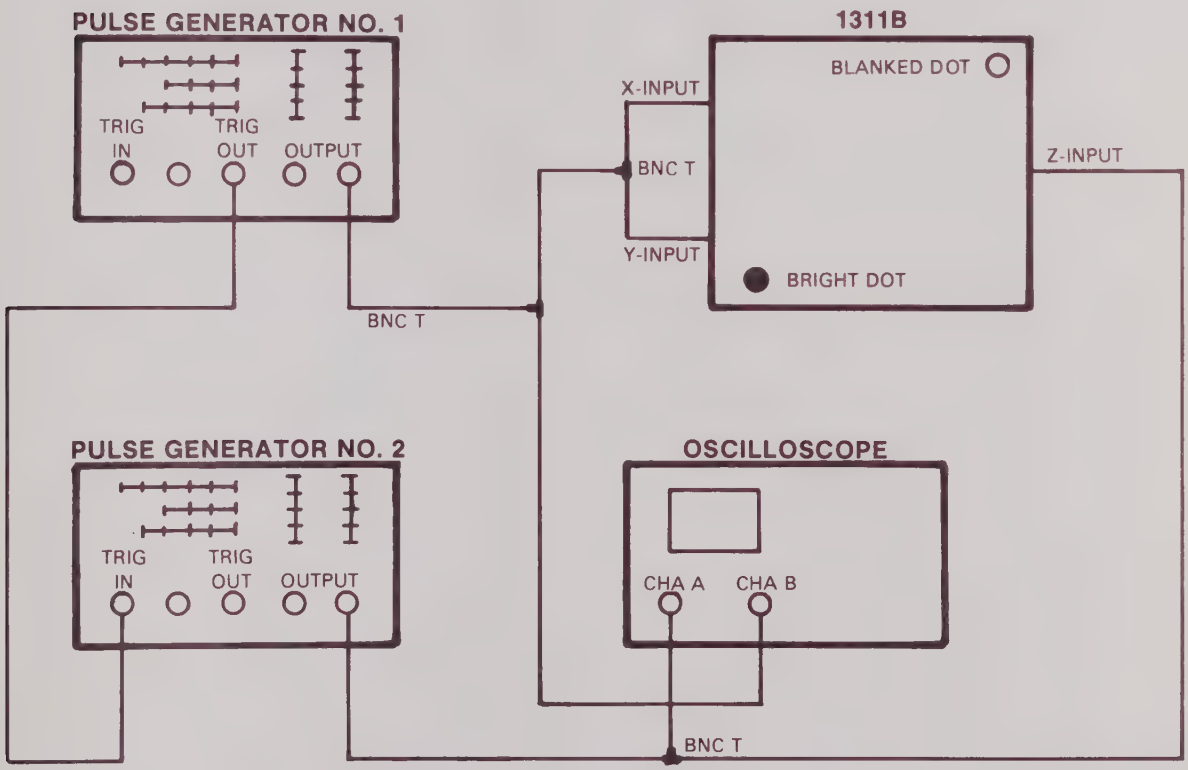

Figure 4-9. Settling Time Test Setup

c. Using the monitor oscilloscope adjust Pulse Generator No. 1 to 10 μs.

d. Adjust output amplitude of Pulse Generator No. 1 for 1 V.

e. Using the monitor oscilloscope, adjust Pulse Generator No. 2 for a .2 μs wide 2 V p-p pulse with −1V offset.

f. Connect Z-INPUT and adjust pulse amplitude and offset if needed. Adjust Display INTENSITY to view one dot only. (See figure 4-9.)

g. Check monitor oscilloscope for the following display (figure 4-10).

PERFORMANCE TESTS

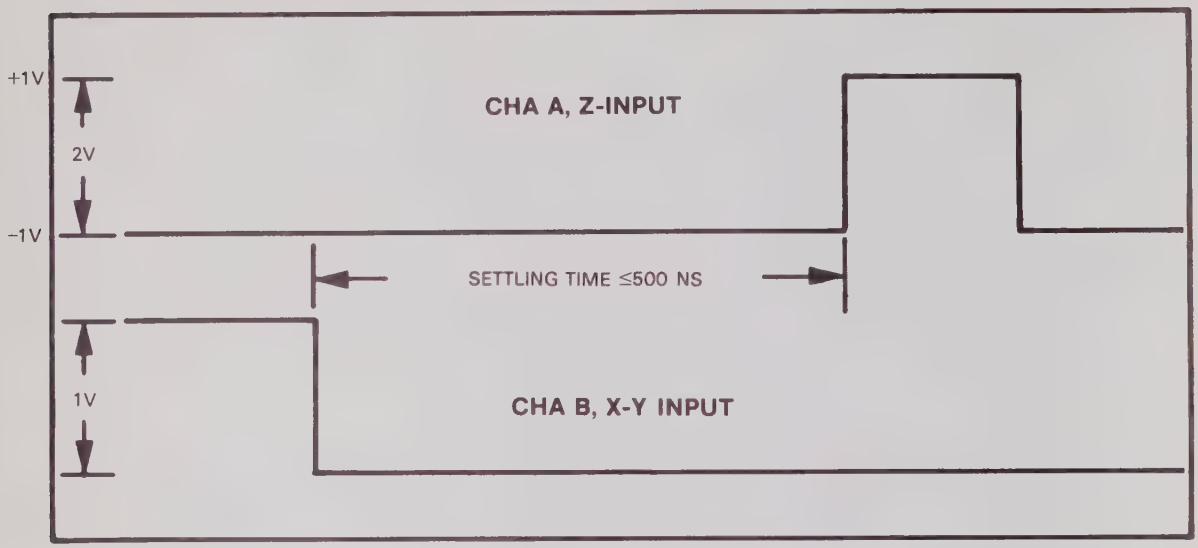

Figure 4-10. Settling Time Measurement with 1 V Input

h. Monitor the display and adjust the PULSE DELAY VERNIER on Pulse Generator No. 2 until a tail appears on the bright dot.

i. When the tail measures 1 dot diameter measure the time difference between the pulses displayed on the monitor oscilloscope. Time between pulses must not exceed 500 ns.

PERFORMANCE TEST RECORD

HEWLETT-PACKARD

MODEL 1311B

X-Y DISPLAY **Tested by** _____

SERIAL NO. _____ **Date** _____

Paragraph Number	Test	Min	Results Actual	Max
4-10	X- Y-bandwidth			
	X-bandwidth	≥9.4 cm (3.7 in.)	_____	
	Y-bandwidth	≥9.4 cm (3.7 in.)	_____	
	X- Y-deflection Factor			
4-11	X-deflection Factor	<14.5 cm (5.7 in.)	_____	>25.4 cm (10 in.)
4-12	Y-deflection Factor	<14.5 cm (5.7 in.)	_____	>25.4 cm (10 in.)
4-13	Repeatability			
	X-amplifier		_____	≤0.15"
	Y-amplifier		_____	≤0.15"
4-14	Crosstalk			
	X-amplifier to Y-amplifier		_____	≤0.38 mm (0.015 in.)
	Y-amplifier to X-amplifier		_____	≤0.38 mm (0.015 in.)
4-15	Z-axis Blanking Polarity			
	+1 Vdc (Max. Intensity)		_____	
	−1 Vdc (No Trace)		_____	
4-17	Settling Time			
	Large Signal (1.0 V)		_____	≤500 ns

SECTION V

ADJUSTMENTS

5-1. INTRODUCTION.

5-2. This section describes adjustments and checks required to return the instrument to peak operating capabilities when repairs have been made. Included in this section are equipment setups and adjustment procedures.

5-3. SAFETY REQUIREMENTS.

5-4. Although this instrument has been designed in accordance with international safety standards, general safety precautions must be observed during all phases of operation, service, and repair of the instrument. Failure to comply with the precautions listed in the Safety Summary at the front of this manual or with specific warnings given throughout this manual could result in serious injury or death. Service and adjustments should be performed only by qualified service personnel.

5-5. EQUIPMENT REQUIRED.

5-6. A complete list of required test equipment is given in Section I, table 1-4. Test equipment equivalent to that recommended may be substituted, provided it meets the required characteristics. For best results, use recently calibrated test equipment.

5-7. ADJUSTMENTS.

5-8. The adjustment procedures are arranged in a recommended sequence of adjustments. While most adjustments may be made independent of other adjustments, it is recommended that adjustments be made sequentially as a number of adjustments are directly related to preceeding or following adjustments.

5-9. For best results, allow the instrument to warm up for 15 minutes before making adjustments. Adjustment locations for the Low Voltage and High Voltage Power Supplies are shown in figure 5-4. Figures 5-8,5-14 and 5-21, show adjustment locations for Z-axis amplifier, X-Y amplifiers, and focus and astigmatism amplifier respectively.

5-10. ADJUSTMENT PROCEDURES.

WARNING

ELECTRICAL SHOCK HAZARD

Use extreme caution when instrument covers are removed and power is applied. Voltages up to 24 kV are present around the CRT and HVPS areas and are capable of causing serious injury or death. Read the Safety Summary at the front of this manual before proceeding.

ADJUSTMENTS

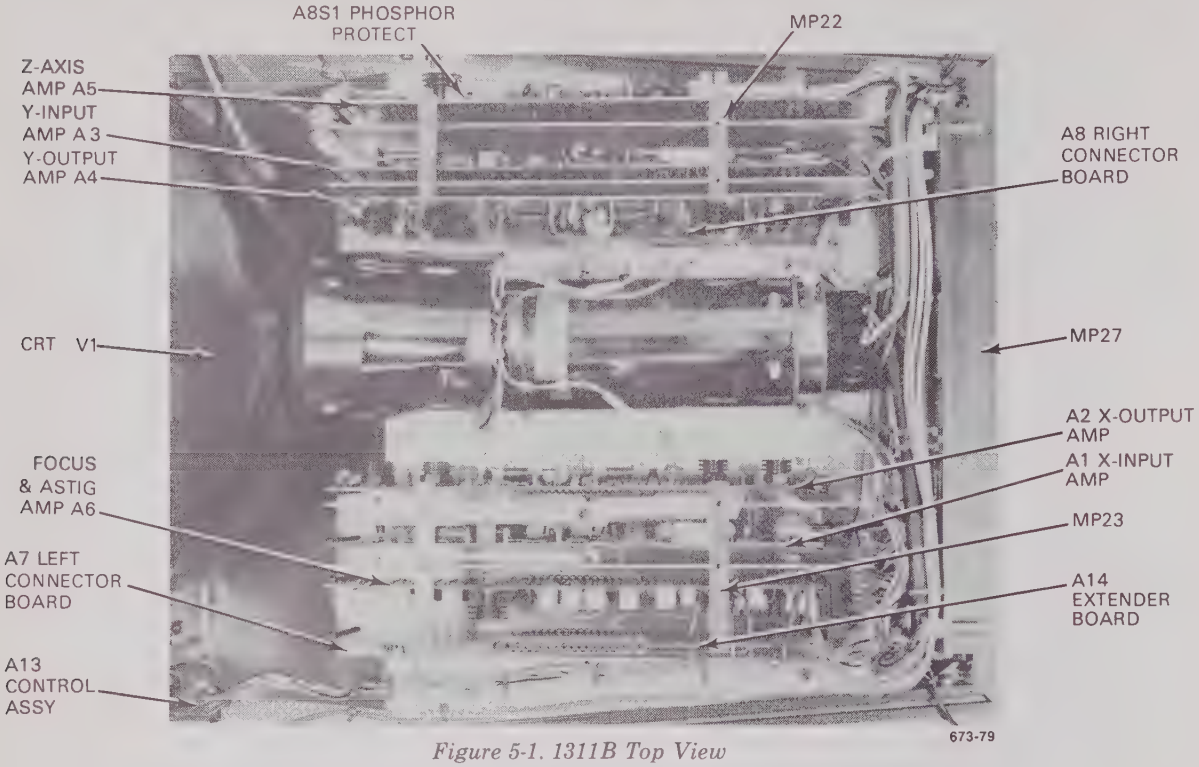

Figure 5-1. 1311B Top View

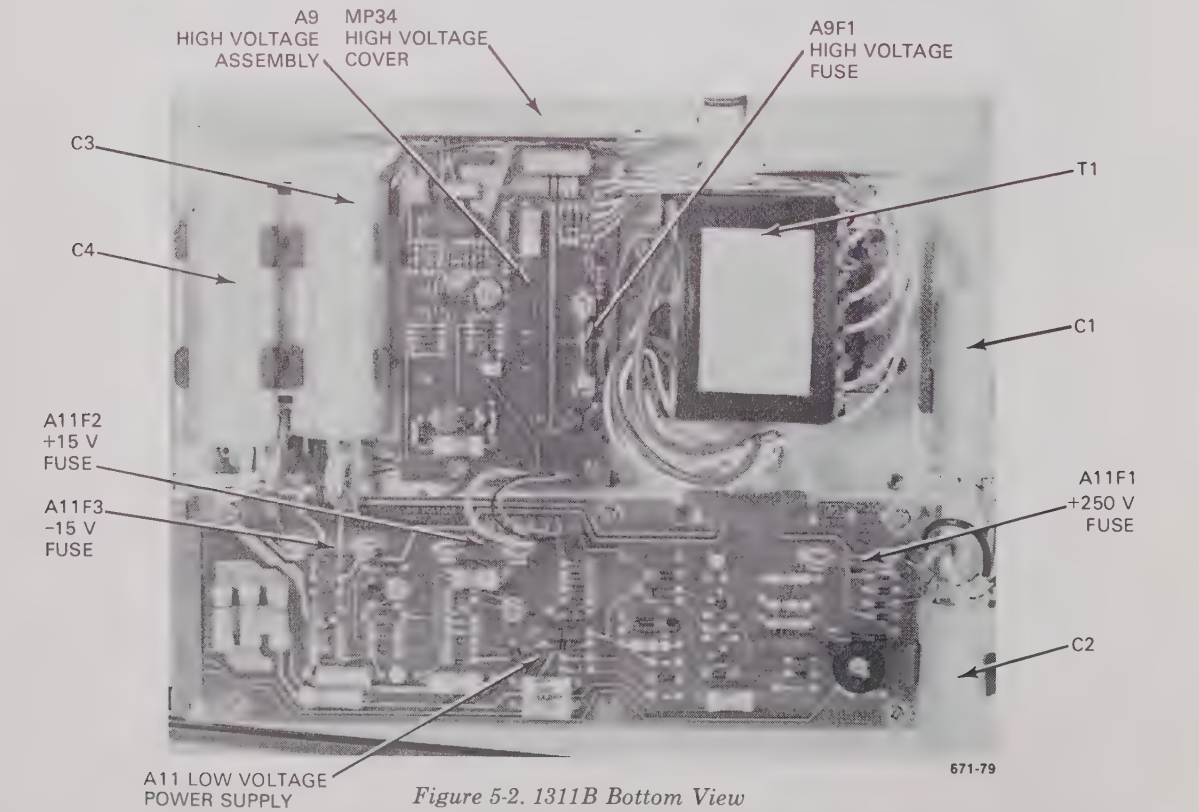

Figure 5-2. 1311B Bottom View

NOTE

The following Adjustment Procedures are written for the standard instrument only. If optional attenuators have been installed, readjust all input signal levels accordingly.

ADJUSTMENTS

5-11. LOW VOLTAGE POWER SUPPLY ADJUSTMENTS.

REFERENCE:
Service Sheet 8.

DESCRIPTION:
The +250 V and the -15 V are the adjustable power supplies. The +15 V supply is referenced to the -15 V supply. The +250 V supply is adjusted to within ±0.1 V. The -15 V supply is adjusted so that both +15 V and -15 V supplies are within ±0.1 V.

EQUIPMENT:
Digital Multimeter

PROCEDURE:

CAUTION

The +250 V supply is used as reference for the CRT cathode regulator circuit. Precise calibration of the +250 supply is essential for proper reference of the cathode supply. If the +250 V supply is not properly calibrated, the cathode voltage may exceed acceptable limits, and may cause activation of the HV shutdown circuit.

a. Connect digital voltmeter between red wire and chassis ground on the low-voltage power supply board A11.

b. Adjust the +250 V supply (A11R12) for +250 V ±0.1 V.

c. Alternately connect the digital voltmeter to the violet and white/red wire on low-voltage power supply board (A11) while adjusting the -15 V (A11R29) supply for equal error between the -15 V and +15 V supply. Final error on either supply must be ≤ ±0.1 V.

ADJUSTMENTS

5-12. HIGH VOLTAGE POWER SUPPLY.

NOTE

The following procedure need be performed only if repairs have been made to the high voltage power supply (A9) or if all of the high-voltage assembly has been replaced.

REFERENCE:
Service Sheet 7.

DESCRIPTION:
This procedure describes calibration of the high voltage shutdown circuit which ensures that the cathode voltage can never exceed –4750 V.

EQUIPMENT REQUIRED:
Digital Voltmeter
1000:1 Divider Probe

WARNING

Proper calibration of the high voltage shutdown circuit is necessary to prevent excessive cathode voltage being applied to the CRT. Cathode voltages in excess of –4750 V may result in x-ray emissions exceeding .5 mR/hr. Proper operation of the high voltage shutdown circuit ensures that x-ray emissions do not exceed .5 mR/hr under normal operating conditions, and under misadjustment and failure conditions. See Section VIII for Theory of Operation.

PROCEDURE:

a. Measure the +250 V power supply and ensure a reading of +250.1 V to 249.9 V. If necessary, readjust the +250 V power supply (see paragraph 5-11).

b. Check the accuracy of the 1000:1 Divider Probe by measuring the +250 V power supply using the digital voltmeter and the 1000:1 Divider Probe. Record the reading as V_{CAL}.

c. Measure the cathode voltage (4 wire on the A5 board) with the digital voltmeter and the 1000:1 Divider Probe. Record the reading as V_K.

d. Plot V_{CAL} and V_K on the Nomograph in figure 5-3. If V_{CAL} plots off the Nomograph, then the 1000:1 Divider Probe does not meet the required ±3% accuracy. If V_K on V_C plot off the Nomograph, then one or more of the following resistors must be out of tolerance: A9R3; A9R4; A9R24.

WARNING

A9TP3 is +250 V dcs.

e. Temporarily connect resistor "R" (value obtained from figure 5-3) between A9TP2 and A9TP3, in parallel with A9R3 (909 kΩ). If the addition of resistor "R" triggers the high-voltage shutdown circuit, (A9TP1 becomes positive and high-voltage shuts down), remove "R" and proceed to the next test. The shutdown takes a few seconds to occur due to the time constant of the circuit.

f. If the addition of resistor "R" does not trigger the high voltage shutdown circuit (A9TP1 remains negative), remove in sequence A9E1, A9E2, and A9E3 until A9TP1 becomes positive and high voltage shutdown occurs. Leave out the required jumper (A9E1, A9E2, A9E3) when high voltage shutdown has been achieved. Complete the adjustment by removing resistor "R".

g. If high voltage shutdown can not be accomplished check the tolerance of the following components:

A9VR3 — should be 5.11 V ±2% (5.01 V to 5.21 V)
A9R21 — should be 38.3k ±1% (37.917k to 38.683k)
A9R22 — should be 274 kΩ ±1% (301.4k to 246.6k)
A9R24 — should be 30 MΩ ±1% (29.7 MΩ to 30.3 MΩ).

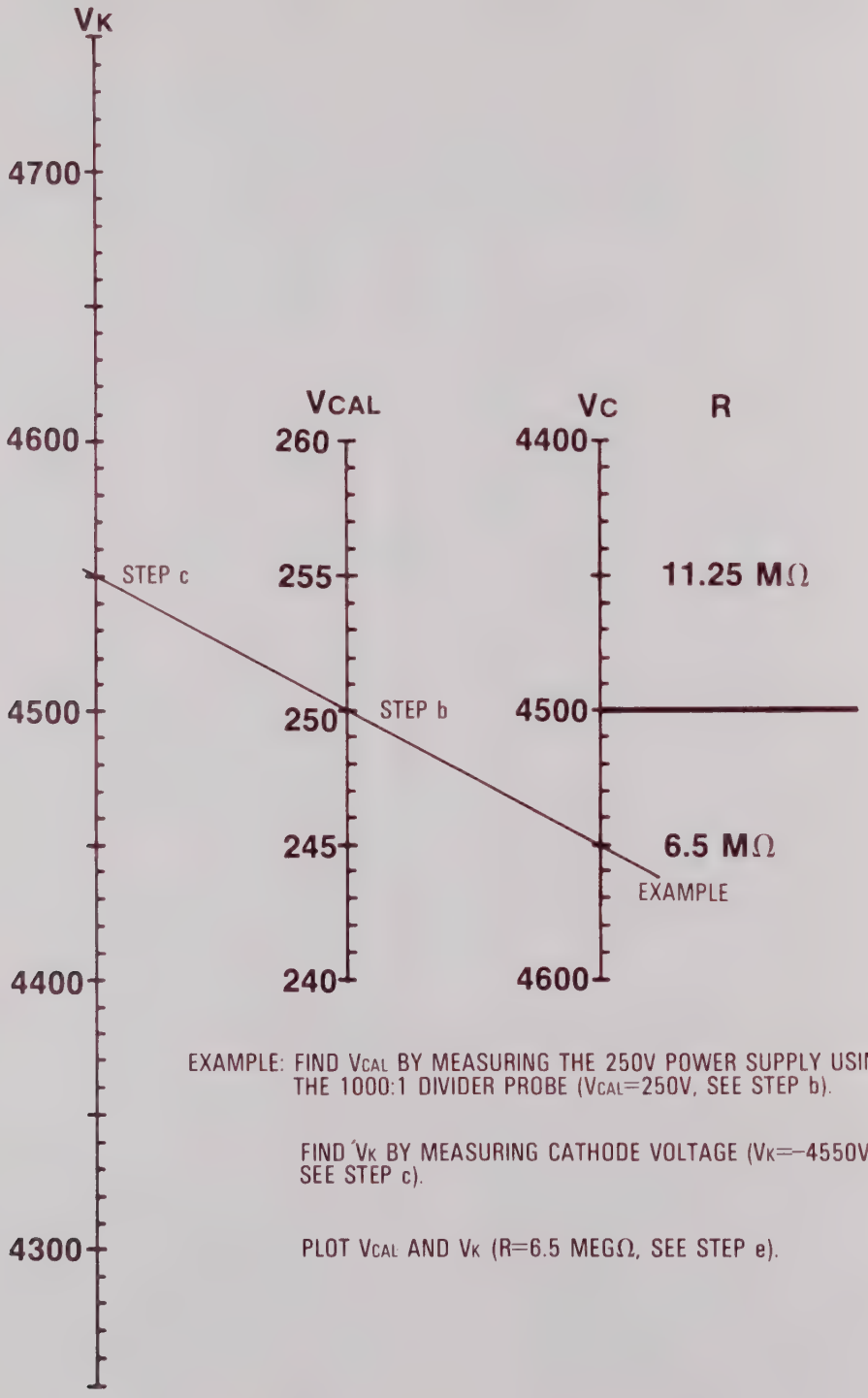

Figure 5-3. High Voltage Shutdown Circuit Nomograph

ADJUSTMENTS

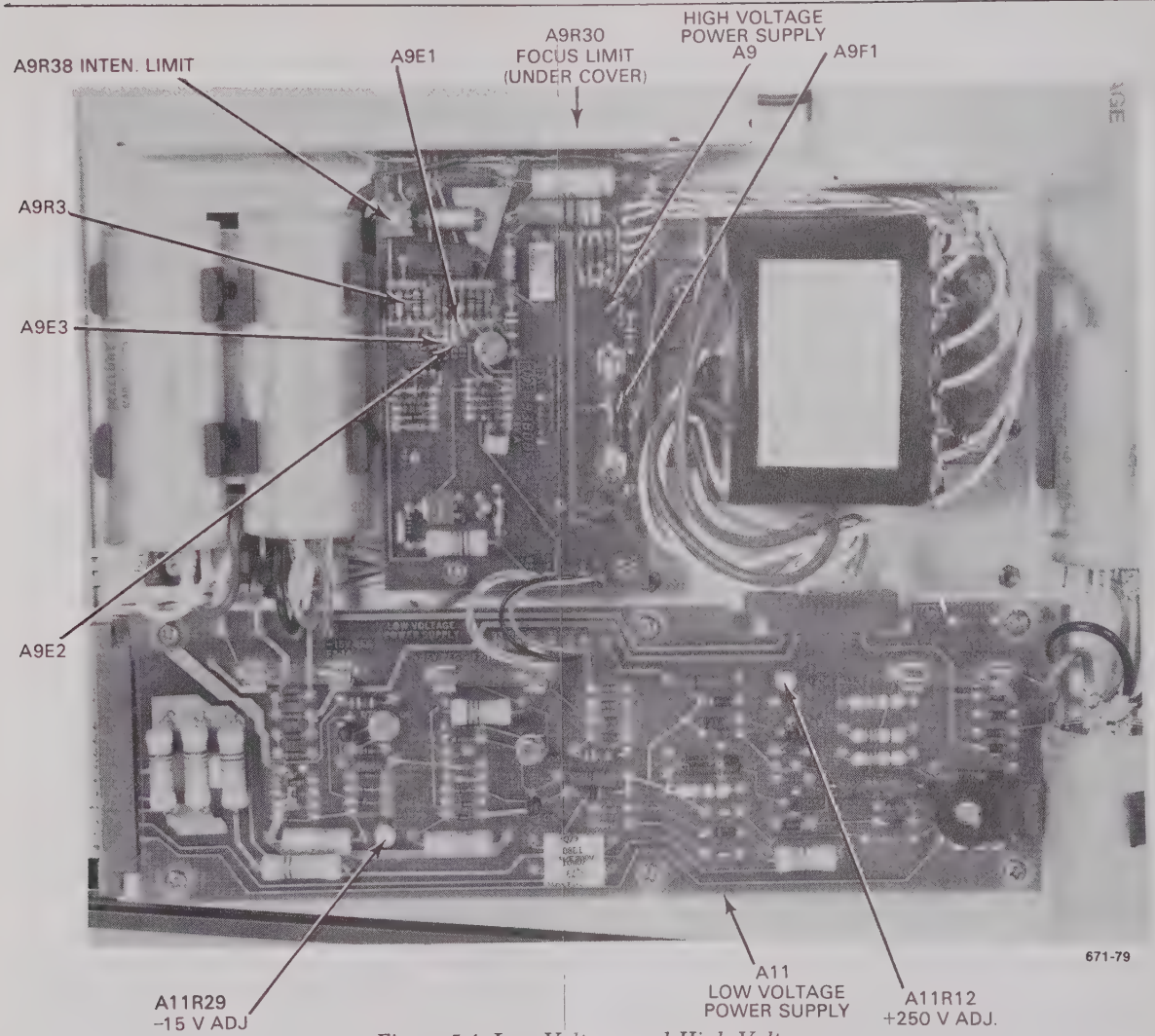

Figure 5-4. Low Voltage and High Voltage Power Supply Adjustment Locations

Table 5-1. Low Voltage and High Voltage Power Supply Adjustments

Reference Designator	Adjustment Name	Adjustment Paragraph	Service Sheet	Description
A11R12	+250 V SUPPLY	5-11	8	Adjust supply for 250 V ±0.1 V
A11R29	–15 V SUPPLY	5-11	8	Adjust –15 V and +15 V Supply for equal error not exceeding ±.1 V
A9E1 A9E2 A9E3	HIGH VOLTAGE SHUTDOWN	5-12	7	Check for high voltage shutdown below –4750 V

ADJUSTMENTS

k. With INTENSITY control full CCW, adjust G Bal (A5R16) for a maximum signal level at A5TPZ of 30 volts (10 volts drive above the 20 volt offset level). The signal should have positive gain. (If using a pulse generator, adjust G Bal for same amplitude signal as above, +10 volt pulse above +20 volt offset level.)

l. Turn INTENSITY full CW. If V CUTOFF (see step G.) was ≥63 volts, adjust G Cal (A5R17) for a maximum signal level of +70 volts at A5TPZ. If amplifier begins to compress signal, reduce <3 volts. If V CUTOFF was <63 volts then adjust G Cal (A5R17) to set maximum signal level at A5TPZ to: 20V + (.8)(V CUTOFF). (If using a pulse generator, adjust for same signal level as when using graphics generator.)

m. If using graphics generator, connect the Binary Input Cable. Seven blinking and non-blinking intensity levels should be visible (see figure 5-6).

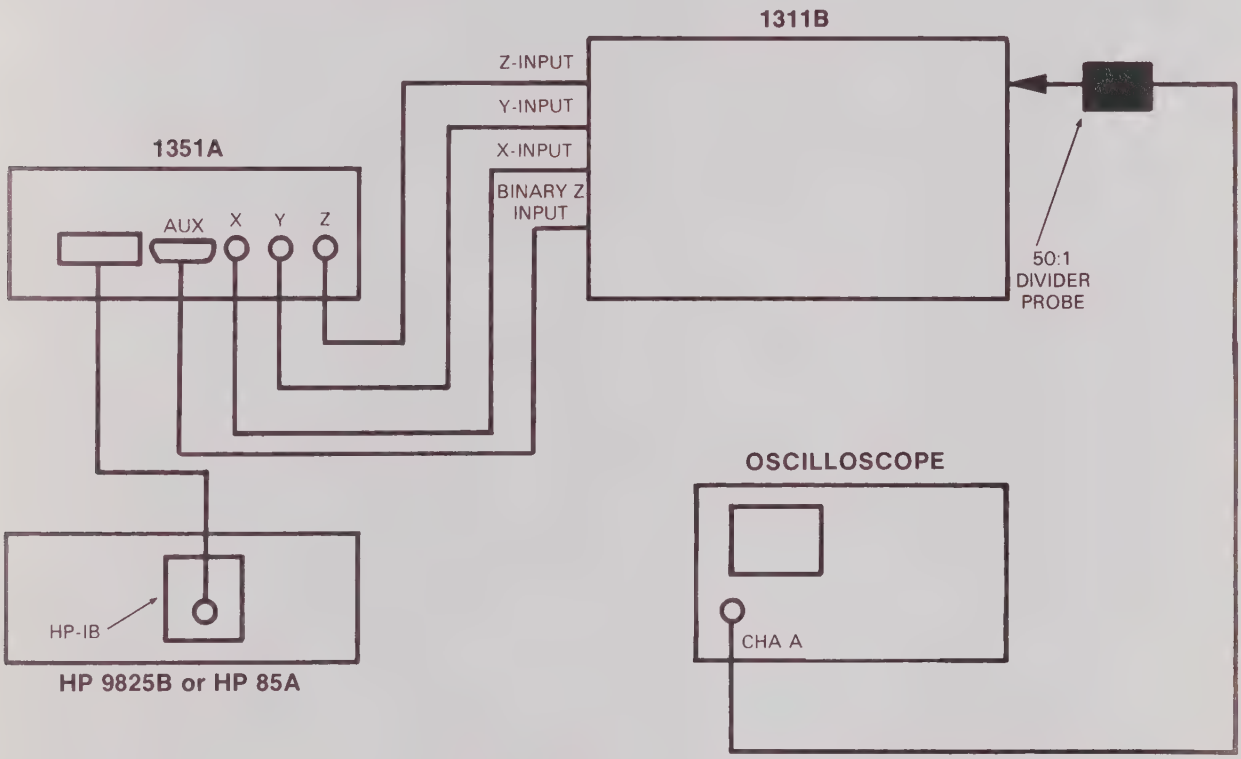

Figure 5-5. Binary Gray Shade Test Setup

Figure 5-6. Gray Shade Test Pattern

ADJUSTMENTS

5-14. Z-AXIS OFFSET, BALANCE, INTENSITY LIMIT, AND GAIN ADJUSTMENTS. OPTION 003 (INTENSITY AS BRIGHTNESS) CONFIGURATION.

REFERENCE:

Service Sheets 4 and 7. Refer to Table 3-6 for jumper configuration.

DESCRIPTION:

Offset adjustment sets the DC level of Z-axis output amplifier. Balance adjustment sets the reference level for the gain stages. Intensity Limit adjustment sets the amount of gain introduced by INTENSITY control. Gain Calibration and Level adjustments set maximum Z-axis amplifier gain.

EQUIPMENT:

Monitor Oscilloscope
Digital Voltmeter
Pulse Generator
Low Capacitance 50:1 Divider Probe

PROCEDURE:

a. With instrument power off, preset the adjustments as follows:

Offset	(A5R21)	full CW
G Bal	(A5R16)	full CCW
Bal	(A5R19)	Midrange
G Cal	(A5R17)	Midrange
Level	(A5R45)	Midrange (Not on Z-Axis board P/N 01311-66505.)

b. Set Z-axis input impedance switch (A5S1) to the 50 ohm position.

c. Turn on instrument power.

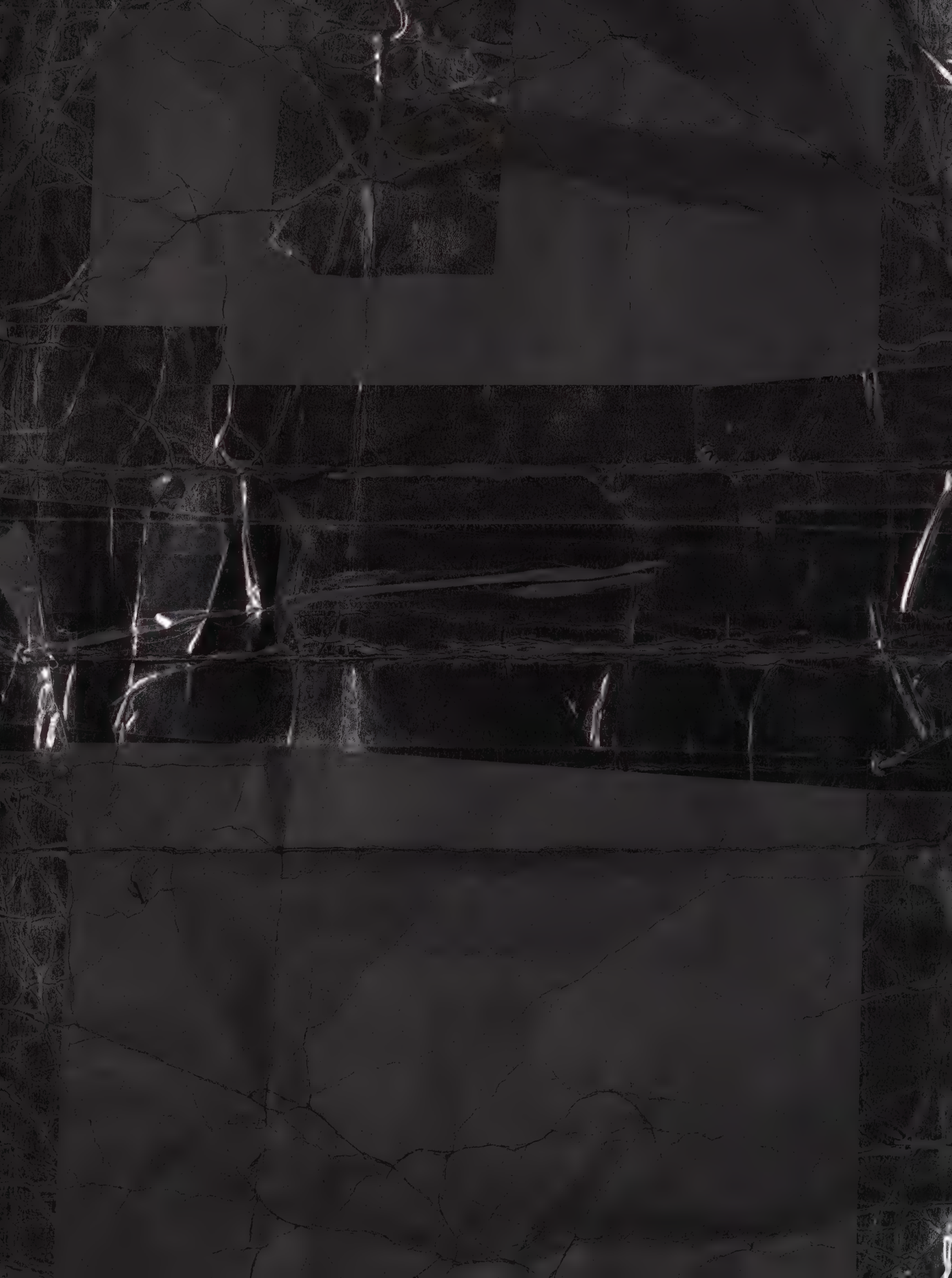

5-13. Z-AXIS OFFSET, BALANCE, INTENSITY LIMIT, AND GAIN ADJUSTMENTS. STANDARD (INTENSITY AS CONTRAST) CONFIGURATION.

REFERENCE:
Service Sheets 4 and 7.

DESCRIPTION:
The Offset adjustment sets the DC level of Z-axis gain stages. The Intensity Limit adjustment prevents CRT damage. The Gain Balance adjustment sets the amount of gain introduced by INTENSITY control and Binary Z Input. The Gain Calibration sets the maximum Z-axis amplifier gain.

EQUIPMENT:
Monitor Oscilloscope
Digital Voltmeter
HP 1351A Graphics Generator
HP 9825A or HP85A Desktop Computer
HP 8120-2739 Binary Z-Input Cable
Low Capacitance 50:1 Divider Probe
Pulse Generator

PROCEDURE:

a. Turn instrument power off, remove high voltage fuse A9F1. Set Z-axis input impedance switch (A5S1) to 50 ohms. Set Phosphor Protect Switch (A8S1) off.

b. Preset the following adjustments as indicated:

Front Panel INTENSITY Control		full counterclockwise (CCW)
OFFSET	(A5R21)	Midrange
G BAL	(A5R16)	Midrange
BAL	(A5R19)	Midrange
G Cal	(A5R17)	Midrange
Level	(A5R45)	full counterclockwise (CCW) (This adjustment is not on Z-Axis board P/N 01311-66505.)

Turn on the instrument power.

c. (Skip this step on Z-Axis board P/N 01311-66505). Apply a 10 KHz, +1 V, 1 microsecond wide (1% duty cycle) pulse with 0 V baseline to Z-INPUT. Turn INTENSITY control full clockwise and adjust Level (A5R45) for a +71 V peak pulse at A5TPZ. Remove signal at Z-INPUT.

d. Adjust Offset (A5R21) for a +20 Volts at A5TPZ with INTENSITY control full CCW.

e. Adjust BAL (A5R19) for a 3 volt positive shift when INTENSITY control is rotated from full counterclockwise to full clockwise. After adjustment, turn INTENSITY control full CCW and turn the instrument off.

f. Replace the high voltage fuse A9F1 and turn on instrument power.

g. Adjust Intensity Limit (A9R38) until beam is just extinguished. Measure the voltage a A9C21 and record this value. The CRT cutoff value is this voltage minus 20 volts.

$$V_{CUTOFF} = V_{A9C21} - 20\ V$$

h. Adjust Intensity Limit (A9R38) for dim beam on CRT screen when INTENSITY control is full CCW.

i. Connect equipment as shown is figure 5-5, but do not connect the Binary Input Cable.

j. If using an HP 9825B Desktop Computer, load and run the Binary Gray Shade Test Pattern program shown in Section IV, Table 4-2. If using an HP85A, load and run the program shown in Table 4-3. (If a desktop computer and graphics generator is not available, apply a +1 V, 1 μs wide, 10 KHz pulse with 0 V baseline to Z-INPUT from a pulse generator and position beam off CRT screen.)

d. Position beam off CRT screen (beam may not be visible at this time).

e. Turn front panel INTENSITY control full CW.

f. (Skip this step on Z-Axis board P/N 01311-66505.) Adjust Level (A5R45) for +71 volts at A5TRZ.

g. Adjust offset (A5R21) for +65 volts at A5TPZ.

h. Turn front panel INTENSITY control full CCW and verify A5TPZ is less than +10 volts.

i. Apply 10 KHz, +1 volt pulse with 0 volt baseline to Z-Axis input.

j. Monitor A5TPZ with oscilloscope and turn INTENSITY control clockwise until baseline at A5TPZ begins to move positive.

k. Adjust G Cal (A5R17) for a pulse signal amplitude at A5TPZ of 50 volts p-p.

l. Remove Z-axis input signal and turn on Phosphor Protect Switch (A8S1).

m. Position beam on CRT screen and turn INTENSITY full clockwise. Verify A5TPZ is approximately 18 volts.

n. Adjust Intensity Limit A9R38 for a dim spot on CRT screen.

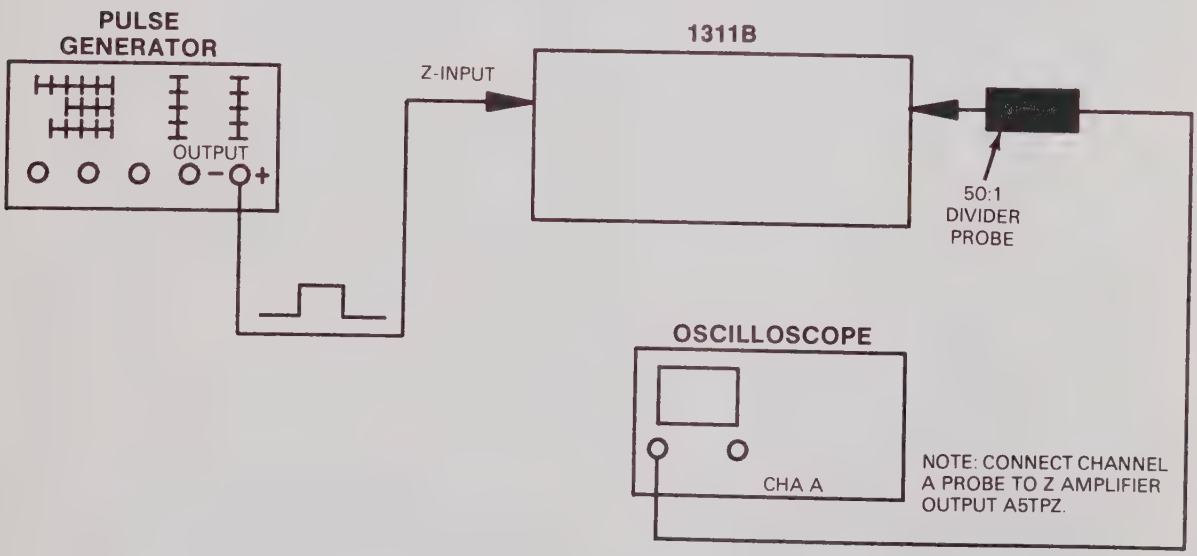

Figure 5-7. Z-axis Option 003 Test Setup

5-15. Z-AXIS AND FOCUS AMPLIFIERS PULSE RESPONSE.

REFERENCE:
Service Sheet 4 and 5.

DESCRIPTION:
The high frequency response adjustments (A5C6, A5R53) adjust the Z-axis amplifier pulse response for [illegible] time consistent with minimum overshoot (rise time = 25 nanoseconds, overshoot typically is 5%). The high [illegible] adjustments (A6C4, A6R47) adjust focus amplifier pulse response for ⩽35 nanosecond risetime.

EQUIPIMENT:
Monitor Oscilloscope
Pulse Generator
Low Capacitance 50:1 Divider Probe

PROCEDURE:

a. Center X POSITION. Use Y POSITION to move beam slightly off screen. Apply 10 kHz, [illegible] microsecond wide, (1% duty cycle) pulse to the Z-axis INPUT.

b. Set front panel INENTISTY counterclockwise.

c. Connect the monitor oscilloscope to the Z-axis output (A5TPZ). Use the 50:1 divider probe.

d. Monitor the oscilloscope and adjust HF1 (A5C6) and HF2 (A5R53) to obtain a pulse of le[illegible] nanosecond rise time with minimum perturbations (±5% typical).

e. Connect monitor oscilloscope to focus output (junction of A6Q25 and A6R102, see Figure 5-21)

f. Turn front panel INTENSITY full clockwise.

g. Adjust HF1 (A6C4) and HF2 (A6R47) for best pulse response (⩽5% perturbations, ⩽35 ns ris[illegible]

h. Disconnect test equipment.

ADJUSTMENTS

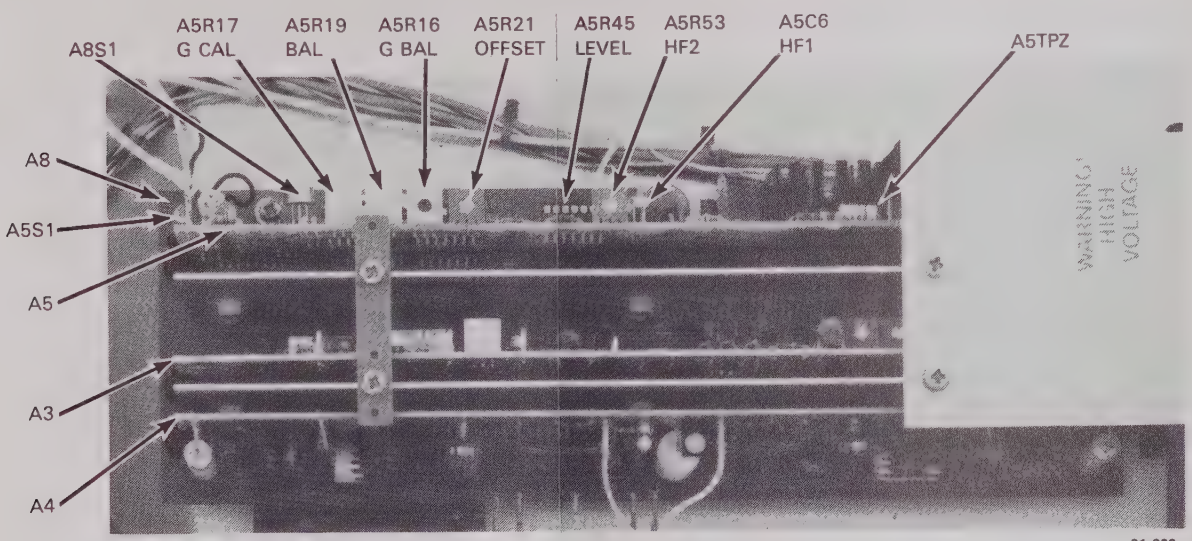

Figure 5-8. Z-axis Amplifier Adjustment Locations

Table 5-2. Z-axis Amplifier Adjustments

Reference Designator	Adjustment Name	Adjustment Paragraph	Service Sheet	Description
A5R21	Z-AXIS OFFSET	5-13	4	Adjust Z-OFFSET for 20 V output Z-AXIS output (A5TPZ)
A5R19	Z-AXIS BALANCE	5-13	4	Adjust for 3 V increase at Z-AXIS output when intensity control is turned from minimum to maximum
A1R16	Z-AXIS GAIN BALANCE	5-13	4	Adjust for 10 V p-p above V_{CUTOFF} at A5TPZ with INTENSITY Control counterclockwise
A9R38	INTENSITY LIMIT	5-13	7	Adjust for dimly visible dot on screen with INTENSITY at minimum and no Z-AXIS input
A5R17	Z-AXIS GAIN CAL	5-14	4	Adjust to 70 V at maximum signal peak (monitor at A5TPZ) with 1 V p-p Z input
A5R45	Z-AXIS LEVEL	5-13	4	Adjust to +71 V maximum level at A5TPZ
A5C6 A5R53	Z-AXIS HF1 Z-AXIS HF2	5-15	4	Adjust for pulse rise time of $\leqslant$25 ns

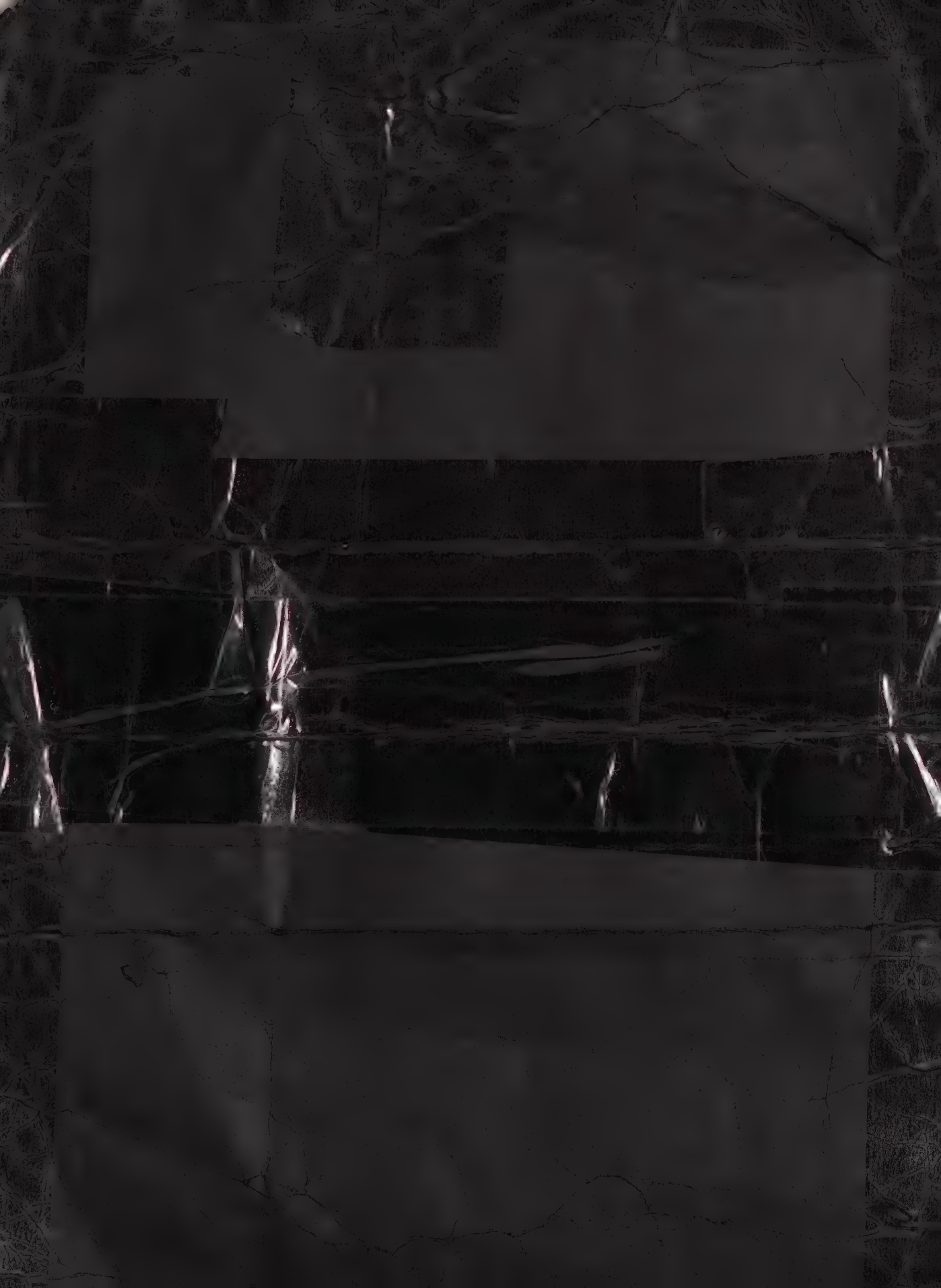

ADJUSTMENTS

5-17. Y-AMPLIFIER GAIN ADJUSTMENT.

REFERENCE:
Service Sheet 2.

DESCRIPTION:
The Y-amplifier Gain is adjusted so that the front panel Y-GAIN control varies the trace length from ≤11.2 cm (4.4 in.) to ≥19.6 cm (7.7 in.) with a 0.9 V input signal.

EQUIPMENT:
Function Generator
Monitor Oscilloscope

PROCEDURE:

a. Connect Equipment as shown in figure 5-9.

b. Set front panel Y-GAIN control fully clockwise.

c. Set Function Generator output as follows:

FREQUENCY ..... 1 kHz
FUNCTION ..... Sine Wave
AMPLITUDE ..... 0.9 V p-p as monitored on oscilloscope

d. Adjust Y-amplifier Gain A3R12 for slightly greater than 19.6 cm (7.7 in.) deflection.

e. Set front panel Y-GAIN fully counter clockwise and check for less than 11.2 cm (4.4 in.) of deflection.

ADJUSTMENTS

5-18. X-AMPLIFIER DC BALANCE ADJUSTMENT.

REFERENCE:
Service Sheet 2.

DESCRIPTION:
The X-amplifier Average and Balance adjustments (A1R64), A1R11) are set to minimize dc shift when the front panel X-GAIN control is rotated throughout its range.

EQUIPMENT:
Digital Voltmeter

PROCEDURE:

a. Remove ground strap from Digital Voltmeter and connect Voltmeter leads differentially to the horizontal deflection plates (9 and 5 wires on X-output amplifier, A2).

b. Set front panel X-POSITION control for a 0 V reading on Digital Voltmeter.

c. Disconnect Digital Voltmeter common lead and connect it to chassis ground.

d. Set Average adjustment (A1R64) for a reading of +108 V on Digital Voltmeter.

e. Turn front panel X-GAIN control back and forth between its clockwise and counterclockwise position while observing spot on display. Set Balance adjustment (A1R11) to minimize movement of spot. Spot movement shall not exceed 0.8 cm (0.3 in.).

5-19. Y-AMPLIFIER DC BALANCE ADJUSTMENT.

REFERENCE:
Service Sheet 2.

DESCRIPTION:
The Y-amplifier Average and Balance adjustments (A3R64), A3R11) are set to minimize dc shift when the front panel Y-GAIN control is rotated throughout its range.

EQUIPMENT:
Digital Voltmeter

PROCEDURE:

a. Remove ground strap from Digital Voltmeter and connect Voltmeter leads differentially to the vertical deflection plates (9 and 5 wires on Y-output amplifier, A4).

b. Set front panel Y-POSITION control for a 0 V reading on Digital Voltmeter.

c. Disconnect Digital Voltmeter common lead and connect it to chassis ground.

d. Set Average adjustment (A3R64) for a reading of +108 V on Digital Voltmeter.

e. Turn front panel X-GAIN control back and forth between its clockwise and counterclockwise position while observing spot on display. Set Balance adjustment (A3R11) to minimize movement of spot. Spot movement shall not exceed 0.8 cm (0.3 in.).

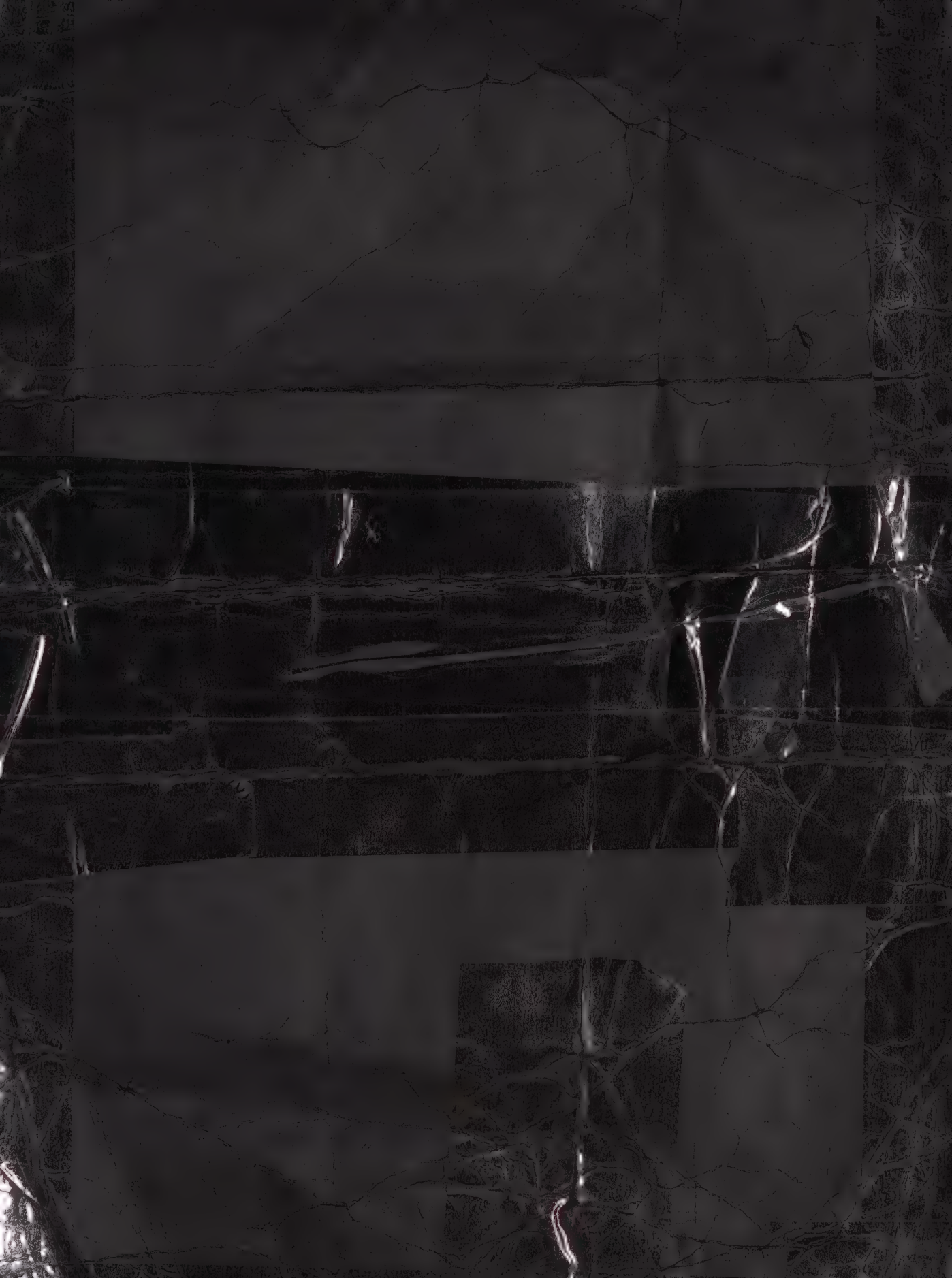

5-16. X-AMPLIFIER GAIN ADJUSTMENT.

REFERENCE:
Service Sheet 2.

DESCRIPTION:
The X-amplifier Gain is adjusted so that the front panel X-GAIN control varies the trace length from ≤14.7 cm (5.8 in.) to ≥25.4 cm (10 in.) with a 0.9 V input signal.

EQUIPMENT:
Function Generator
Monitor Oscilloscope

PROCEDURE:

a. Connect equipment as shown in figure 5-9.

b. Set front panel X-GAIN control fully clockwise.

c. Set Function Generator output as follows:

FREQUENCY .....1 kH
FUNCTION .....Sine Wav
AMPLITUDE .....0.9 V p-p as monitored on oscilloscop

d. Adjust X-amplifier Gain A1R12 for slightly greater than 25.4 cm (10 in.) deflection.

e. Set front panel X-GAIN fully counter clockwise and check for less than 14.7 cm (5.8 in.) deflection.

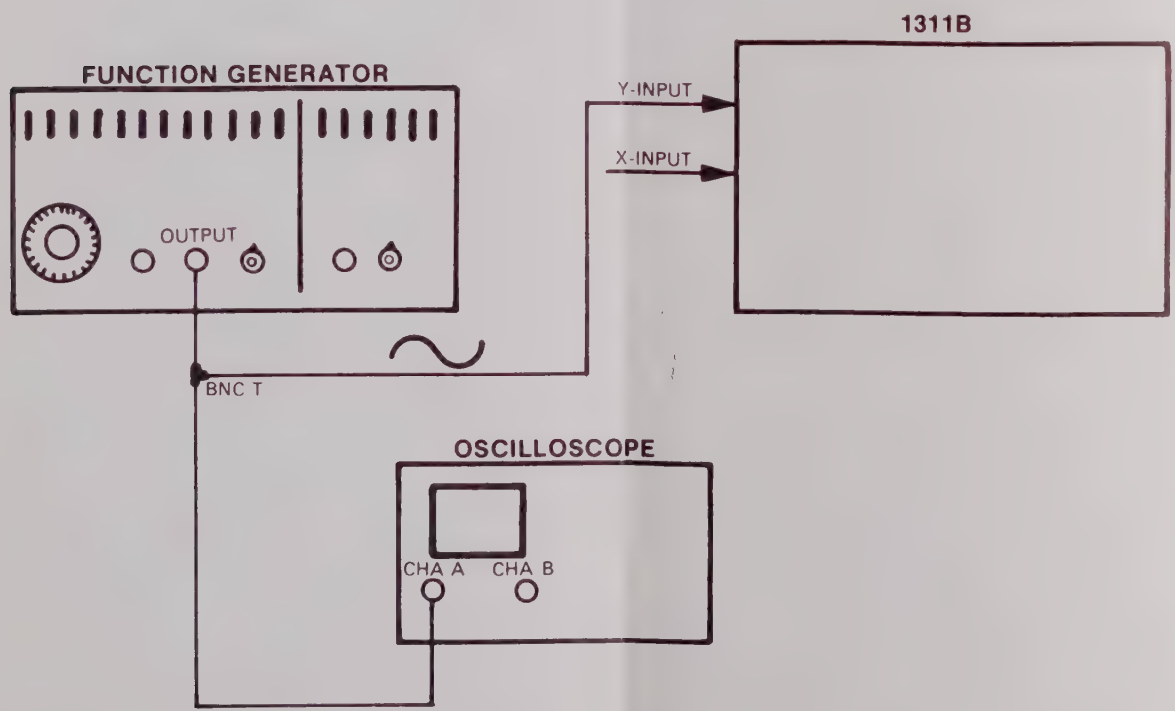

Figure 5-9. Gain-set Adjustment Test Setup

ADJUSTMENTS

5-20. X-AMPLIFIER PULSE RESPONSE AND BANDWIDTH ADJUSTMENTS.

REFERENCE:
Service Sheet 3.

DESCRIPTION:
The X-amplifier response adjustments are set for an amplifier rise time of ⩽75 nanoseconds at minimum overshoot and a bandwidth of 5 mHz.

EQUIPMENT:
Pulse Generator
Monitor Oscilloscope
Function Generator

PROCEDURE:
a. Set 50Ω/10 KΩ input impedance switch (A1S1) to 50Ω.

b. Connect equipment as shown in figure 5-10.

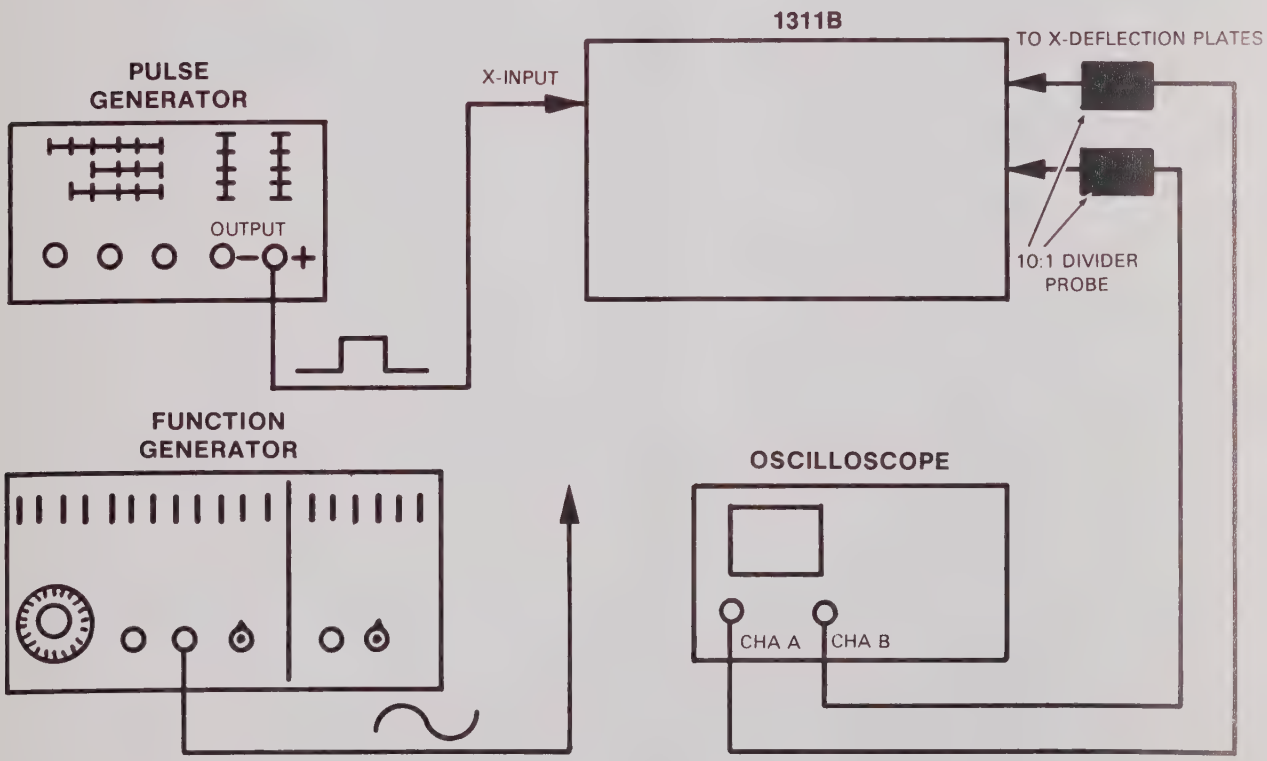

Figure 5-10. X-amplifier Pulse Response and Bandwidth Adjustment Setup

c. Set Pulse Generator controls as follows:

PULSE PERIOD ..... ≅ 10 microsecond
PULSE WIDTH ..... 50% duty cycle
AMPLITUDE ..... full screen deflection

ADJUSTMENTS

d. Connect oscilloscope to the X-deflection plates (9 and 5 wires on X-output amplifier, A2), and set oscilloscope controls as follows:

DISPLAY	A+B
TIME/DIV	10 microsecond/DIV
CHANNEL INPUT ATTENUATORS	1 V/DIV
CHANNEL B	INVERT
COUPLING	AC

e. Set LF ADJ No. 1 (A2R24) and LF ADJ No. 2 (A2C17) for flattest pulse response as indicated in figure 5-11.

f. Adjust HF ADJ No. 1 (A2C8) and HF ADJ No. 2 (A2C12) for fastest and best pulse response.

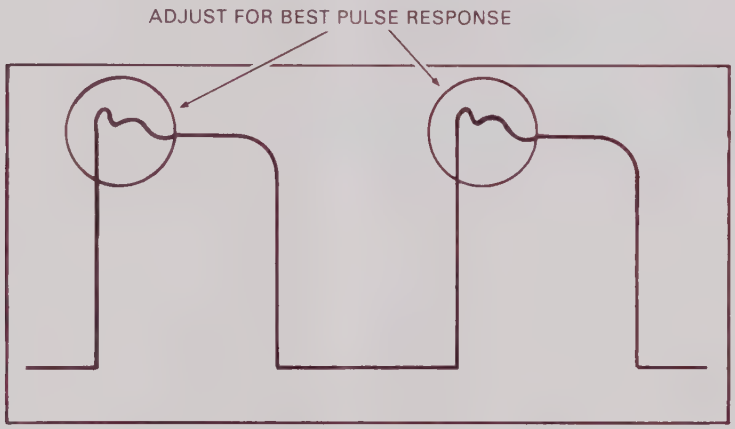

Figure 5-11. X-amplifier Pulse Response Adjustment

g. Measure rise time of the pulse between the 10% to 90% points as displayed on the oscilloscope. Rise time must be ≤75 nanoseconds.

h. Disconnect the oscilloscope probes from the deflection plate wires.

i. Disconnect Pulse Generator from X-INPUT and connect the Function Generator.

j. Apply a 50 kHz sine wave from Function Generator to the X-INPUT. Set output amplitude of Function Generator to cause 12.7 cm (5 in.) deflection on the CRT.

k. Change frequency of Function Generator to 5 MHz and verify that horizontal deflection is ≥9.4 cm (3.6 in.).

l. Repeat steps d through k until amplifier rise time and bandwidth are within specified limits.

ADJUSTMENTS

5-21. Y-AMPLIFIER PULSE RESPONSE AND BANDWIDTH ADJUSTMENTS.

REFERENCE:
Service Sheet 3.

DESCRIPTION:
The Y-amplifier response adjustments are set for an amplifier rise time of ≤75 nanoseconds at minimum overshoot and a bandwidth of 5 MHz.

EQUIPMENT:
Pulse Generator
Monitor Oscilloscope
Function Generator

PROCEDURE:
a. Set 50Ω/10 KΩ input impedance switch (A3S1) to 50Ω.

b. Connect equipment as shown in figure 5-12.

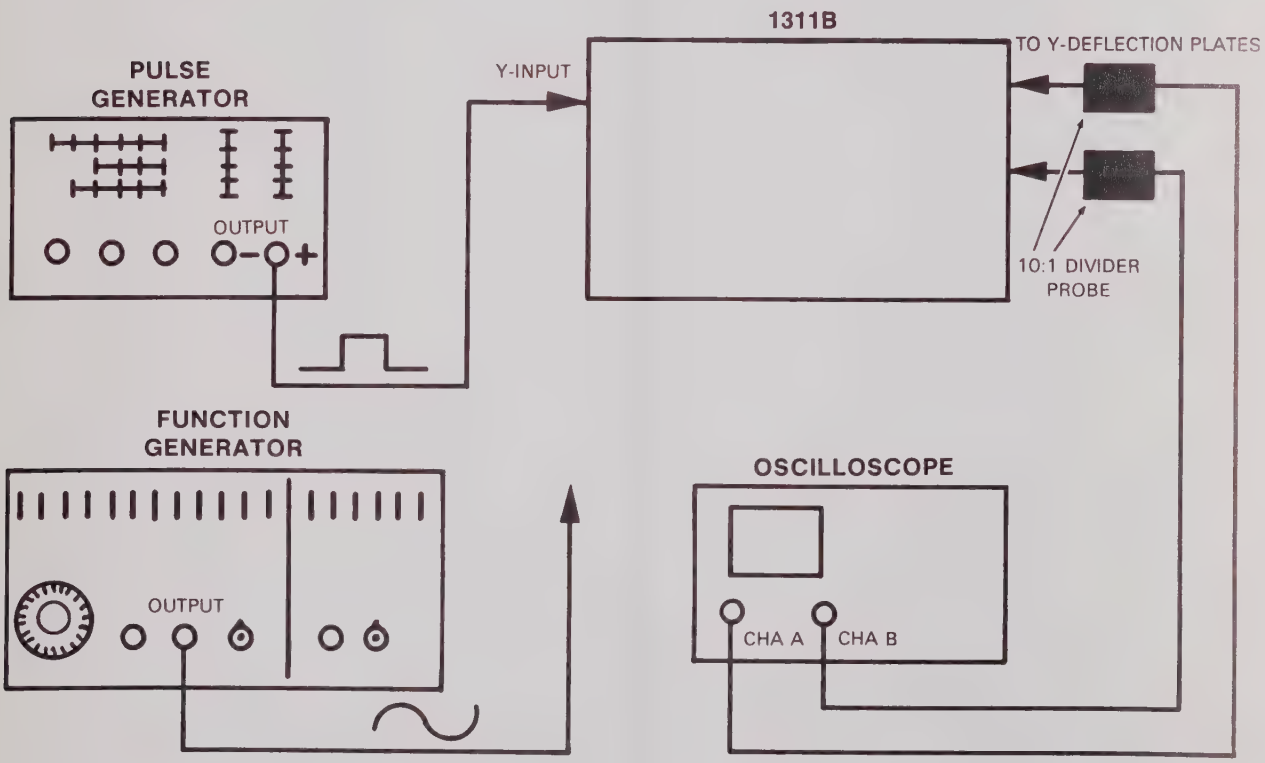

Figure 5-12. Y-amplifier Pulse Response and Bandwidth Adjustment Setup

c. Set Pulse Generator controls as follows:

PULSE PERIOD ..... ≅10 microseconds
PULSE WIDTH ..... 50% duty cycle
AMPLITUDE ..... full screen deflection

d. Connect oscilloscope to the Y-deflection plates (9 and 5 wires on Y-output amplifier, A4), and set oscilloscope controls as follows:

DISPLAY ..... A+B
TIME/DIV ..... 10 microseconds
CHANNEL INPUT ATTENUATORS ..... 1 V/DIV
CHAN B ..... invert

e. Set LF ADJ No. 1 (A4R24) and LF ADJ No. 2 (A4C17) for flattest pulse response as indicated in figure 5-13.

f. Adjust HF ADJ No. 1 (A4C8) and HF ADJ No. 2 (A4C12) for fastest and best pulse response.

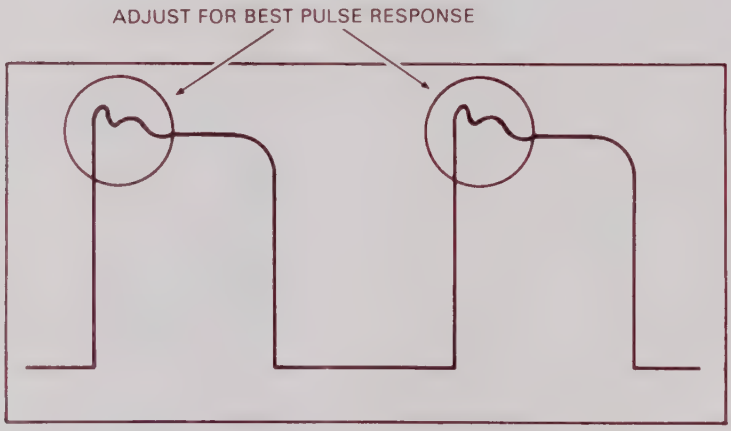

Figure 5-13. Y-amplifier Pulse Response Adjustment

g. Measure rise time of the pulse between the 10% and 90% points as displayed on the oscilloscope. Rise time must be ≤75 nanoseconds.

h. Disconnect oscilloscope probes from deflection plate wires.

i. Disconnect Pulse Generator from Y-INPUT and connect the Function Generator.

j. Apply a 50 kHz sine wave from Function Generator to the Y-INPUT. Set output amplitude of Function Generator to cause 12.7 cm (5 in.) deflection on the CRT.

k. Change frequency of Function Generator to 5 MHz and verify that vertical deflection is ≥9.4 cm (3.6 in.).

l. Repeat steps d through k until amplifier rise time and bandwidth are within specified limits.

ADJUSTMENTS

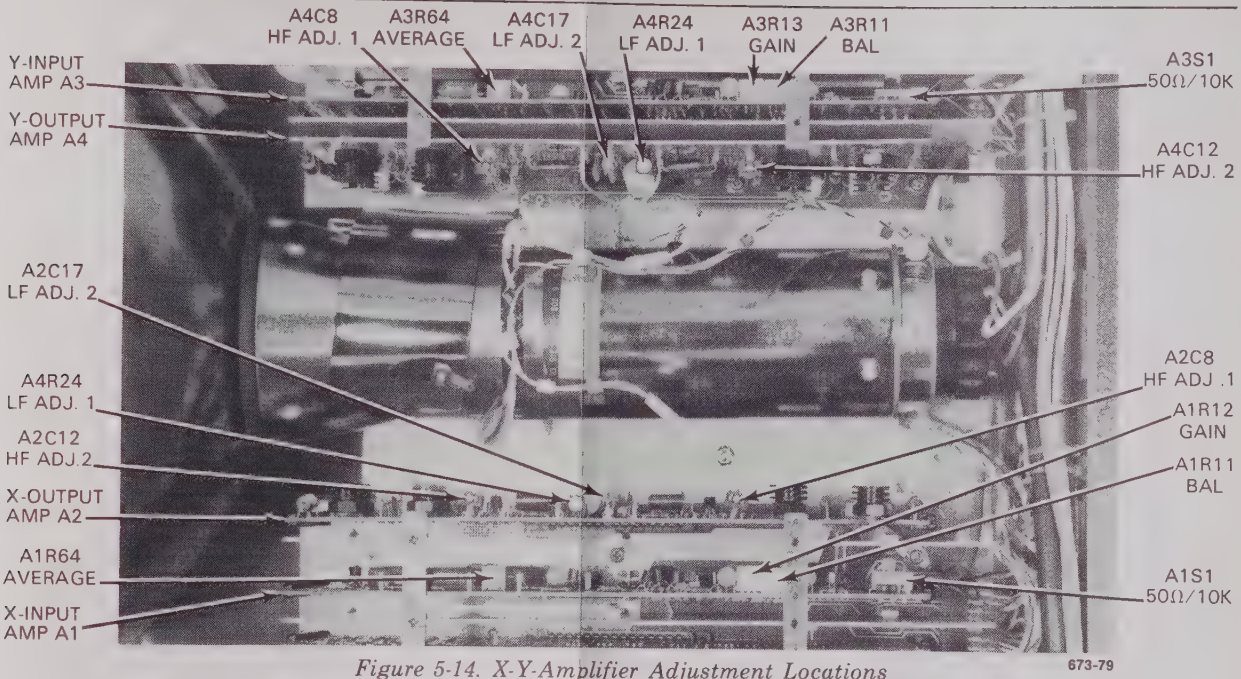

Figure 5-14. X-Y-Amplifier Adjustment Locations

Table 5-3. X- Y-Amplifier Adjustments

Reference Designator	Adjustment Name	Adjustment Paragraph	Service Sheet	Description
A1R12	X-GAIN	5-16	2	Adjust so that front panel X-GAIN provides .9 V to 1.6 V adjustment range.
A1R11	X-BALANCE	5-18	2	Adjust to minimize movement of display when X-GAIN is moved from minimum to maximum
A2R24; A2C17	LF NO. 1; LF NO. 2	5-20	3	Adjust for flattest pulse response at 75 ms
A2C28; A2C12	HF NO. 1; HF NO. 2	5-20	3	Adjust for bandwidth of 5 MHz
A3R12	Y-GAIN	5-17	2	Adjust so that front panel Y-GAIN provides .9 V to 1.6 V adjustment range.
A3R11	Y-BALANCE	5-19	2	Adjust to minimize movement of display when Y-GAIN is moved from minimum to maximum
A4C17; A4R24	LF NO. 1; LV NO. 2	5-21	3	Adjust for flattest pulse response at 75 ms
A4C28; A4C12	HF NO. 1; HF NO. 2	5-21	3	Adjust for bandwidth of 5 MHz

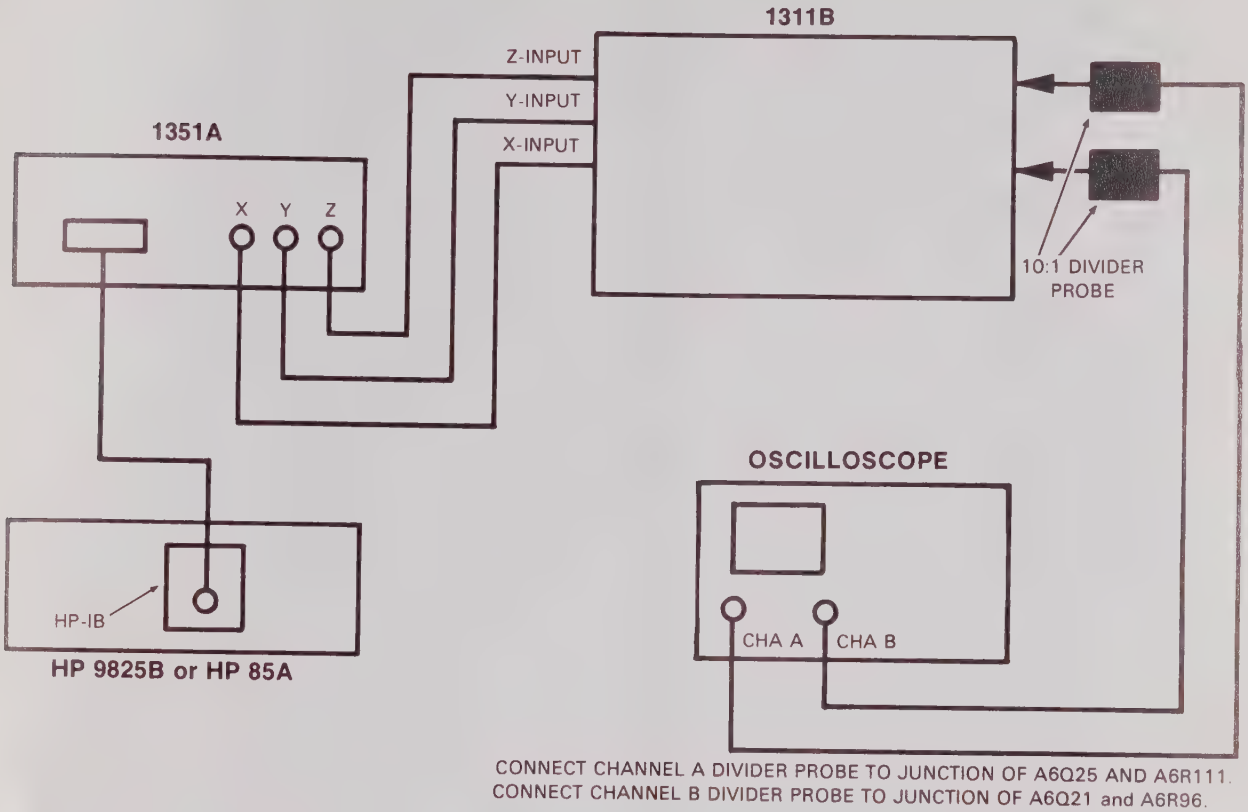

Figure 5-15. Dynamic Focus and Astigmatism Test Setup

NOTE

If Option 003 is installed, set front panel INTENSITY control for a dimly viewable spot before connecting the X-Y-Z-INPUTS. Leave INTENSITY setting for the remainder of this adjustment procedure.

b. Set X- Y- Z-amplifier input impedance switches (A1S1, A3S1, A5S1) to 50Ω.

c. Preset all adjustments on the focus and astigmatism board (A6) to center range.

d. Center the front panel FOCUS and ASTIGMATISM controls.

e. If using an HP 9825B Desktop Computer load and run the Focus and Astigmatism Test Pattern program listed in table 5-4.If using an HP 85A load and run the program listed in table 5-5.

Table 5-4. Focus and Astigmatism Test Program for HP-9825B

```
0: "FOCUS & ASTIG PROGRAM for 9825A/B/T":
1: dim A$[5],B$[5],C$[5],D$[5]
2: cli 7
3: wtb 718,3,20,13,10,"EM::EN::EX::SN::SX::UM::"
4: fmt 1,f4.0,",",f4.0,";"
5: wrt 718,"PE0,:PA0,0"
6: wrt 718,"PE1,::PA0,1020;1020,1020;1020,0;0,0;"
7: 0)X;0)Y;"FC")A$;"AC")B$;gsb "X"
8: 896)Y;gsb "X"
9: 896)X;gsb "X"
10: 0)Y;gsb "X"
11: 0)X;200)Y;"FY1")A$;"AY1")B$;gsb "X"
12: 696)Y;gsb "X"
13: 896)X;gsb "X"
14: 200)Y;gsb "X"
15: 200)X;0)Y;"")A$;"")B$;"FX1")C$;"AX1")D$;gsb "X"
16: 896)Y;gsb "X"
17: 696)X;gsb "X"
18: 0)Y;gsb "X"
19: 448)X;"")A$;"")B$;"FX2")C$;"AX2")D$;gsb "X"
20: 896)Y;gsb "X"
21: 0)X;448)Y;"FY2")A$;"AY2")B$;"")C$;"")D$;gsb "X"
22: 896)X;gsb "X"
23: 448)X;448)Y;"ZG")A$;"ZG")B$;"ZG")C$;"ZG")D$;gsb "X"
24: wrt 718.1,"PE0,::PA",X,Y
25: for I=0 to 353 by 8
26: wrt 718,"PE0,"
27: wrt 718.1,"PA",90cos(I)+511,90sin(I)+511
28: wrt 718,"PE1,"
29: wrt 718.1,"PA",90cos(I)+511,90sin(I)+511
30: next I
31: stp
32: "X":
33: wrt 718.1,"PE0,::PA",X,Y
34: wrt 718.1,"PE1,::PA",X+124,Y+124
35: wrt 718.1,"PE0,::PA",X,Y+124
36: wrt 718.1,"PE1,::PA",X+124,Y
37: wrt 718.1,"PE0,::PA",X+50,Y+5
38: wtb 718,"PE1,::CS0,::TX",A$,3,13,10
39: wrt 718.1,"PE0,::PA",X+50,Y+90
40: wtb 718,"PE1,::CS0,::TX",B$,3,13,10
41: wrt 718.1,"PE0,::PA",X+5,Y+56
42: wtb 718,"PE1,::CS0,::TX",C$,3,13,10
43: wrt 718.1,"PE0,::PA",X+90,Y+56
44: wtb 718,"PE1,::CS0,::TX",D$,3,13,10
45: ret
*4894
```

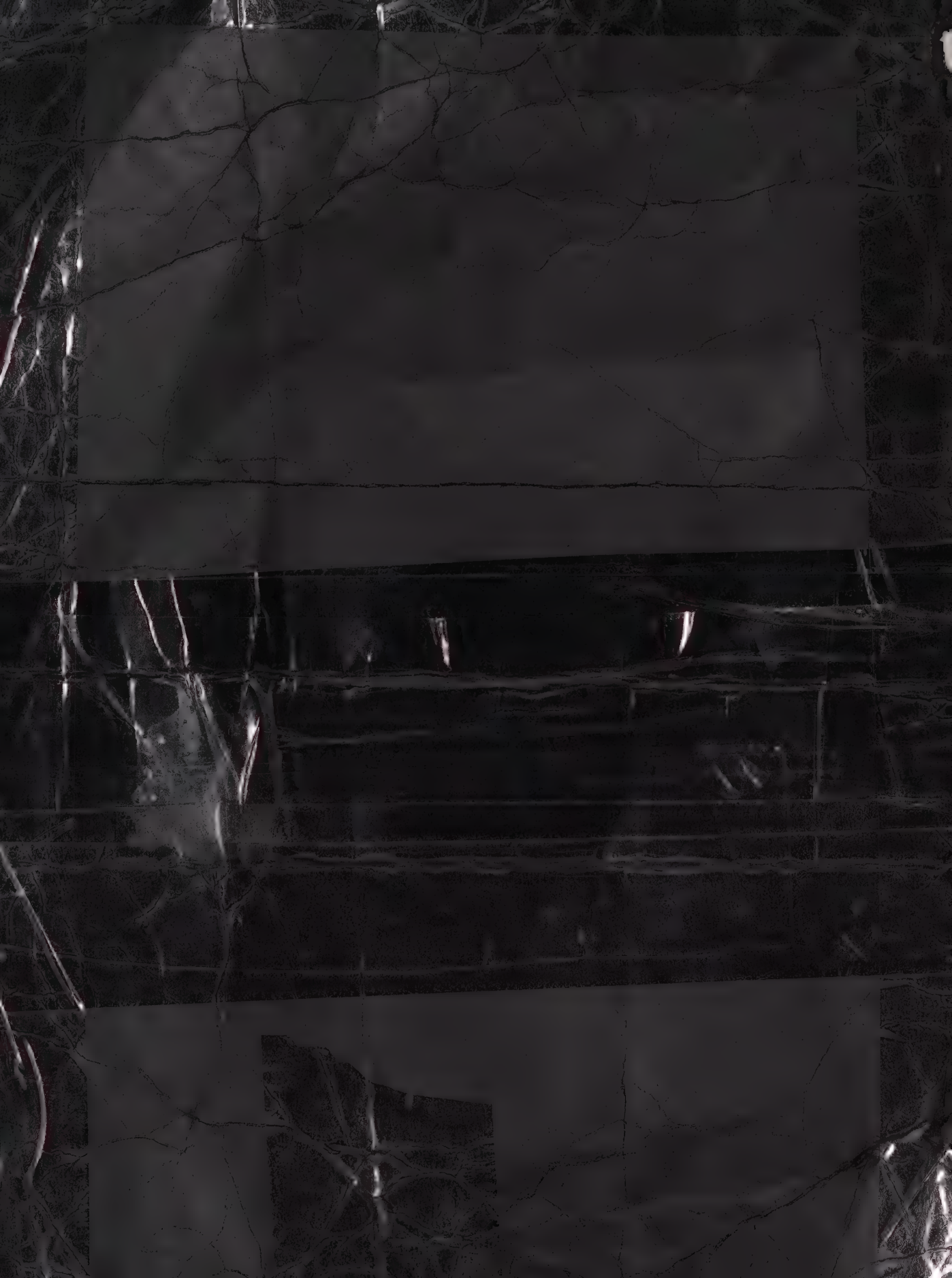

5-22. TRACE-ALIGN AND ORTHO ADJUSTMENT.

REFERENCE:
Service Sheet 7.

DESCRIPTION:
The trace is electrically aligned horizontally and vertically with the sides of the 1311B.

EQUIPMENT:
Function Generator

PROCEDURE:
a. Apply a 1 V p-p, 1 kHz sine wave from Function Generator to the X-INPUT.

b. Set TRACE ALIGN to cause trace to lie parallel to the top or bottom of the cabinet.

c. Disconnect Function Generator from X-INPUT and connect to Y-INPUT.

d. Set ORTHOG to cause the trace to lie parallel to the cabinet sides.

5-23. DYNAMIC FOCUS AND ASTIGMATISM ADJUSTMENT.

REFERENCE:
Service Sheets 5 and 6.

DESCRIPTION:
The following procedure describes the dynamic focus and astigmatism adjustments using the HP Model 1351A Graphics Generator and the HP Model 9825A, HP-IB Controller.

EQUIPMENT:
HP 9825B or HP 85A Desktop Computer
98214 Extended I/O ROM
1351A Graphics Generator
Monitor Oscilloscope.

PROCEDURE:
a. Set up test equipment as shown in figure 5-15.

Table 5-5. Focus and Astigmatism Test Program for HP 85A

```
1 DEG @ FXD 0
2 DIM A$[5],B$[5],C$[5],D$[5]
3 RESET 7
4 OUTPUT 718 ;"EM::EN::EX::SN::UM::"
5 IMAGE 8A,4D,",",4D,";::"
6 IMAGE #,14A
7 OUTPUT 718 ;"PE0,::PA0,0;:"
8 OUTPUT 718 ;"CS0,::PE1,::PA0,1020;1020,1020;1020,0;0,0;::"
9 X=0 @ Y=0 @ A$="FC" @ B$="AC" @ C$="" @ D$="" @ GOSUB 35
10 Y=896 @ GOSUB 35
11 X=896 @ GOSUB 35
12 Y=0 @ GOSUB 35
13 X=0 @ Y=200 @ A$="FY1" @ B$="AY1" @ GOSUB 35
14 Y=696 @ GOSUB 35
15 X=896 @ GOSUB 35
16 Y=200 @ GOSUB 35
17 X=200 @ Y=0 @ A$="" @ B$="" @ C$="FX1" @ D$="AX1" @ GOSUB 35
18 Y=896 @ GOSUB 35
19 X=696 @ GOSUB 35
20 Y=0 @ GOSUB 35
21 X=448 @ A$="" @ B$="" @ C$="FX2" @ D$="AX2" @ GOSUB 35
22 Y=896 @ GOSUB 35
23 X=0 @ Y=448 @ A$="FY2" @ B$="AY2" @ C$="" @ D$="" @ GOSUB 35
24 X=896 @ GOSUB 35
25 X=448 @ Y=448 @ A$="ZG" @ B$="ZG" @ C$="ZG" @ D$="ZG" @ GOSUB 35
26 OUTPUT 718 USING 5 ; "PE0,::PA",X,Y
27 FOR I=0 TO 348 STEP 12
28 P=90*COS(I-135)+X+63 @ Q=90*SIN(I-135)+Y+63
29 OUTPUT 718 USING 5 ; "PE0,::PA",P,Q
30 FOR J=1 TO 2
31 OUTPUT 718 USING 5 ; "PE1,::PA",P,Q
32 NEXT J
33 NEXT I
34 STOP
35 OUTPUT 718 USING 5 ; "PE0,::PA",X,Y
36 OUTPUT 718 USING 5 ; "PE1,::PA",X+124,Y+124
37 OUTPUT 718 USING 5 ; "PE0,::PA",X,Y+124
38 OUTPUT 718 USING 5 ; "PE1,::PA",X+124,Y
39 OUTPUT 718 USING 5 ; "PE0,::PA",X+50,Y+5
40 OUTPUT 718 USING 6 ; "PE1,::CS0,::TX"
41 OUTPUT 718 ;A$,CHR$(3)
42 OUTPUT 718 USING 5 ; "PE0,::PA",X+50,Y+90
43 OUTPUT 718 USING 6 ; "PE1,::CS0,::TX"
44 OUTPUT 718 ;B$,CHR$(3)
45 OUTPUT 718 USING 5 ; "PE0,::PA",X+5,Y+56
46 OUTPUT 718 USING 6 ; "PE1,::CS0,::TX"
47 OUTPUT 718 ;C$,CHR$(3)
48 OUTPUT 718 USING 5 ; "PE0,::PA",X+90,Y+56
49 OUTPUT 718 USING 6 ; "PE1,::CS0,::TX"
50 OUTPUT 718 ;D$,CHR$(3)
51 RETURN
52 END
```

f. Adjust front panel X-Y GAIN and X-Y POSTION controls so that the pattern on screen fills the viewing are. Set front panel INTENSITY fully clockwise (except Option 003). Check figure 5-16 for correct pattern.

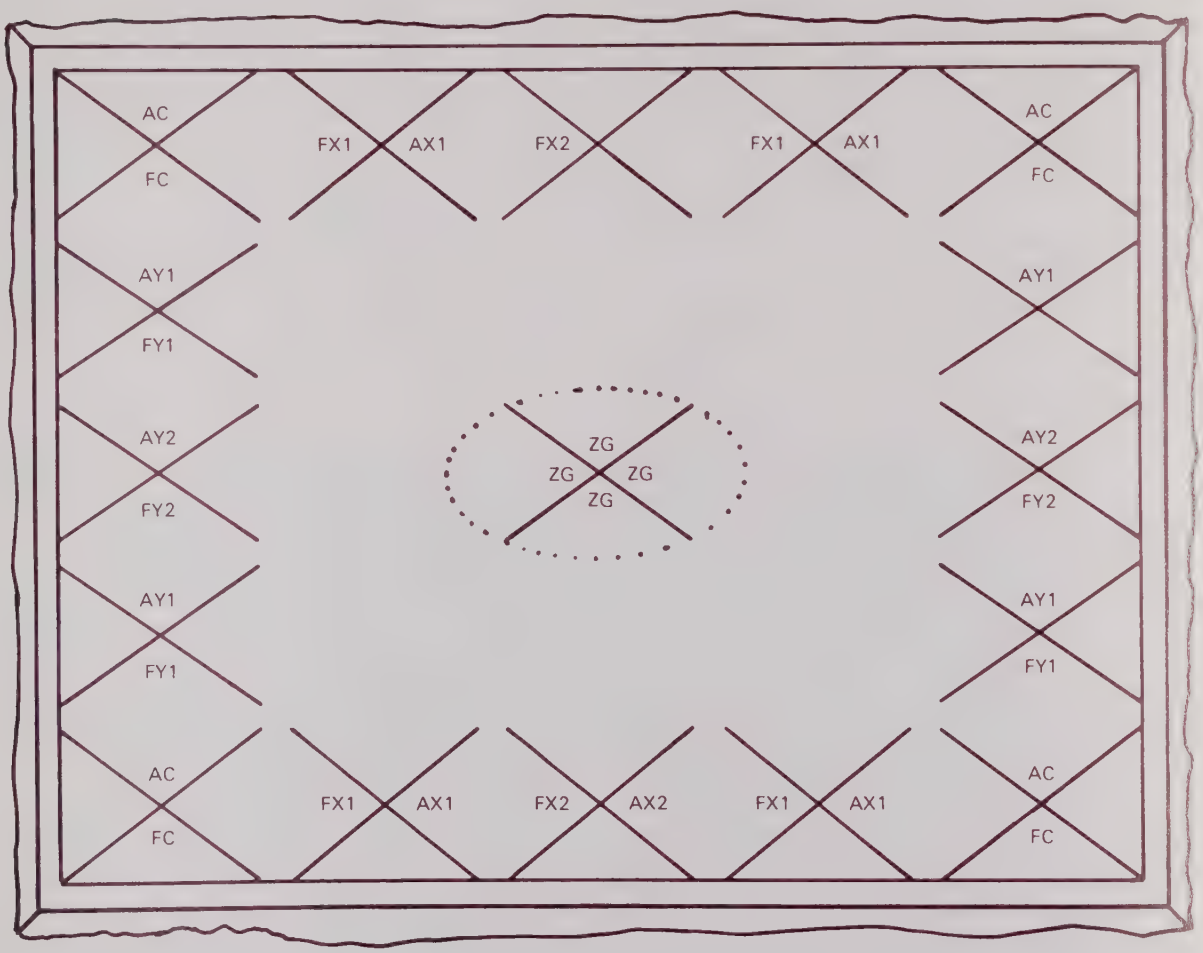

Figure 5-16. Focus and Astigmatism Test Pattern

g. Adjust Astigmatism Balance (A6R90) and Focus Limit (A9R30) for sharpest "X" crossings at the corners of the display.

h. Monitor the focus output (junction of A6Q25 and A6R102) and the astigmatism output (junction of A6Q23 collector and A6R96) with the monitor oscilloscope for the remainder of the adjustment procedure.

i. Set oscilloscope controls as follows and obtain the display as shown in figure 5-17:

DISPLAY ..... ALT
TIME/DIV ..... 2 milliseconds
CHANNEL INPUT ATTENUATORS ..... 50 V/DIV

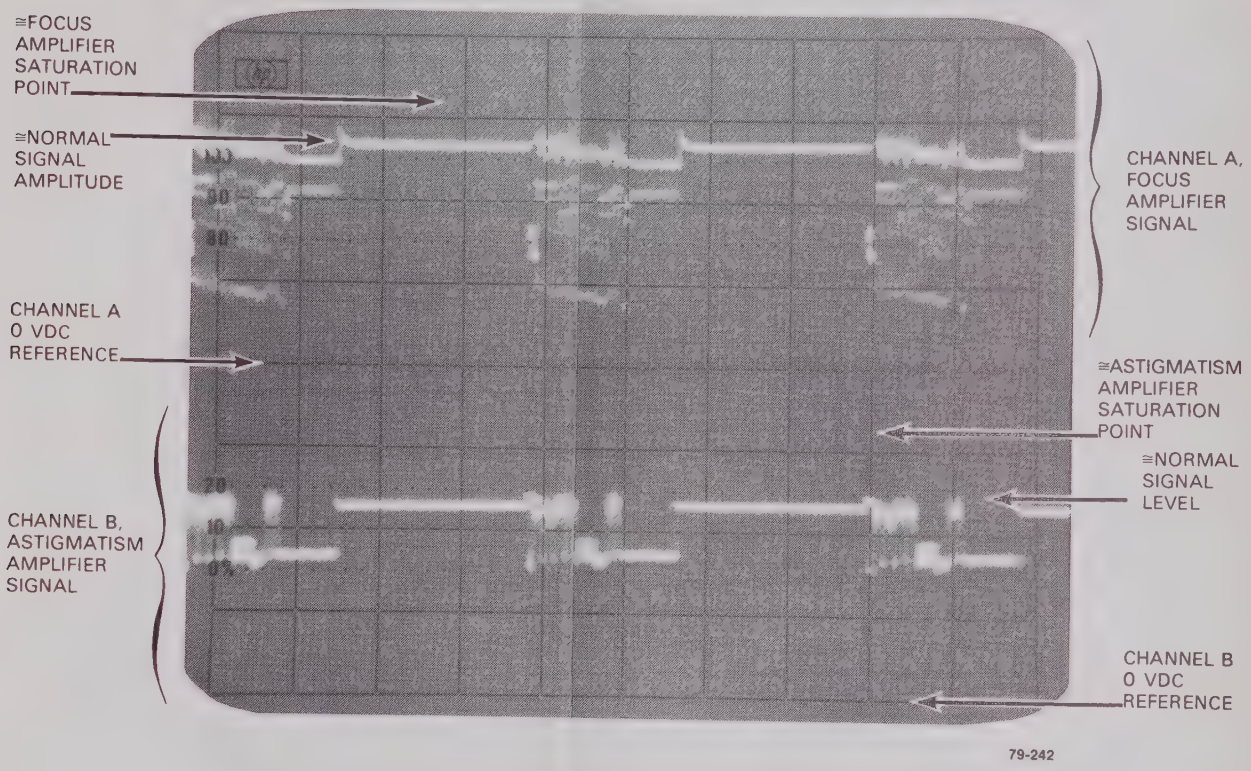

Figure 5-17. Focus and Astigmatism Output Waveforms

j. After each of the following adjustments (steps l through p) check the signal levels displayed on the oscilloscope. If either signal reaches 0 V or +165 V (amplifier saturation), readjust Focus Balance (A6R44) and/or Astigmatism Balance (A6R90) until each signal is between 0 V and +165 V.

k. Adjust FX2 and AX2 for sharpest "X" crossing at positions indicated on screen.

l. Adjust FX1 and AX1 for sharpest "X" crossing at positions indicated on screen.

m. Adjust FY2 and AY2 for sharpest "X" crossing at positions indicated on screen.

n. Adjust FY1 and AY1 for sharpest "X" crossing at positions indicated on screen.

o. All "X" crossings on screen, including the center, should now appear sharply focused. Repeat steps c through o if display is not focused.

p. Adjust Focus Gain (A6R43) for best focused dotted figure at center screen.

q. All elements of the displayed pattern, including alphanumerics, should now be sharply focused. If not, repeat procedure from step l on.

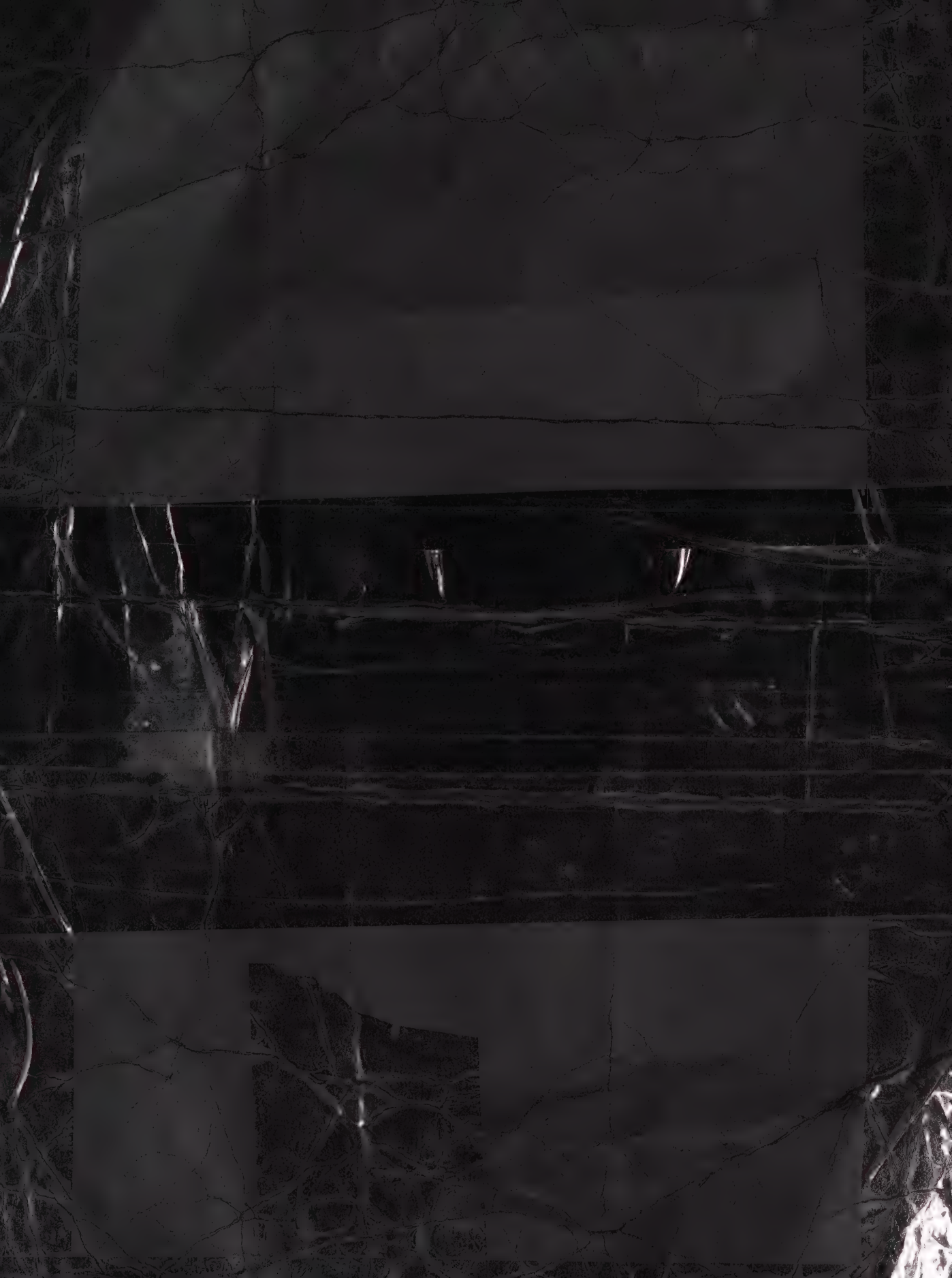

5-24. DYNAMIC FOCUS AND ASTIGMATISM ADJUSTMENT (Alternate Procedure).

REFERENCE:
Service Sheets 5 and 6.

DESCRIPTION:
The following procedure describes the dynamic focus and astigmatism adjustment when the 1351A Graphics Generator and the 9825B HP-IB Controller are not available.

EQUIPMENT:
Pulse Generators (2)
Monitor Oscilloscope

PROCEDURE:
a. Connect equipment as shown in figure 5-18.

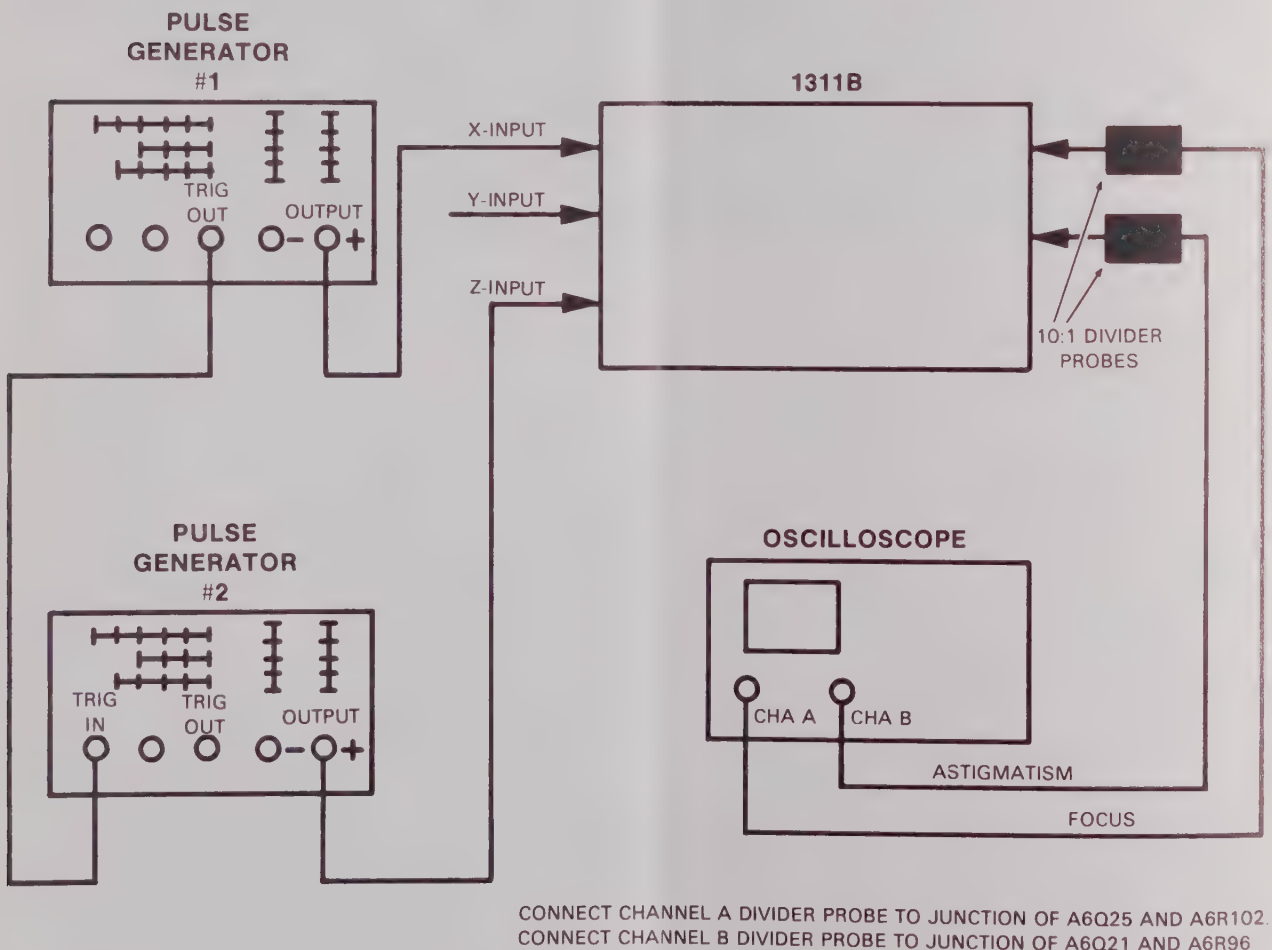

Figure 5-18. Dynamic Focus and Astigmatism Test Setup

ADJUSTMENTS

b. Set Pulse Generator No. 1 controls as follows:

PULSE PERIOD	.2 milliseconds
PULSE WIDTH	50% duty cycle
AMPLITUDE	1 V p-p

c. Set Pulse Generator No. 2 controls as follows:

PULSE PERIOD	EXT. TRIGGER
PULSE WIDTH	10 microseconds
AMPLITUDE	1 V p-p

d. Set oscilloscope controls as follows and obtain the display as shown in figure 5-19.

DISPLAY	ALT
TIME/DIV	50 microseconds
CHANNEL INPUT ATTENUATORS	50 V/DIV

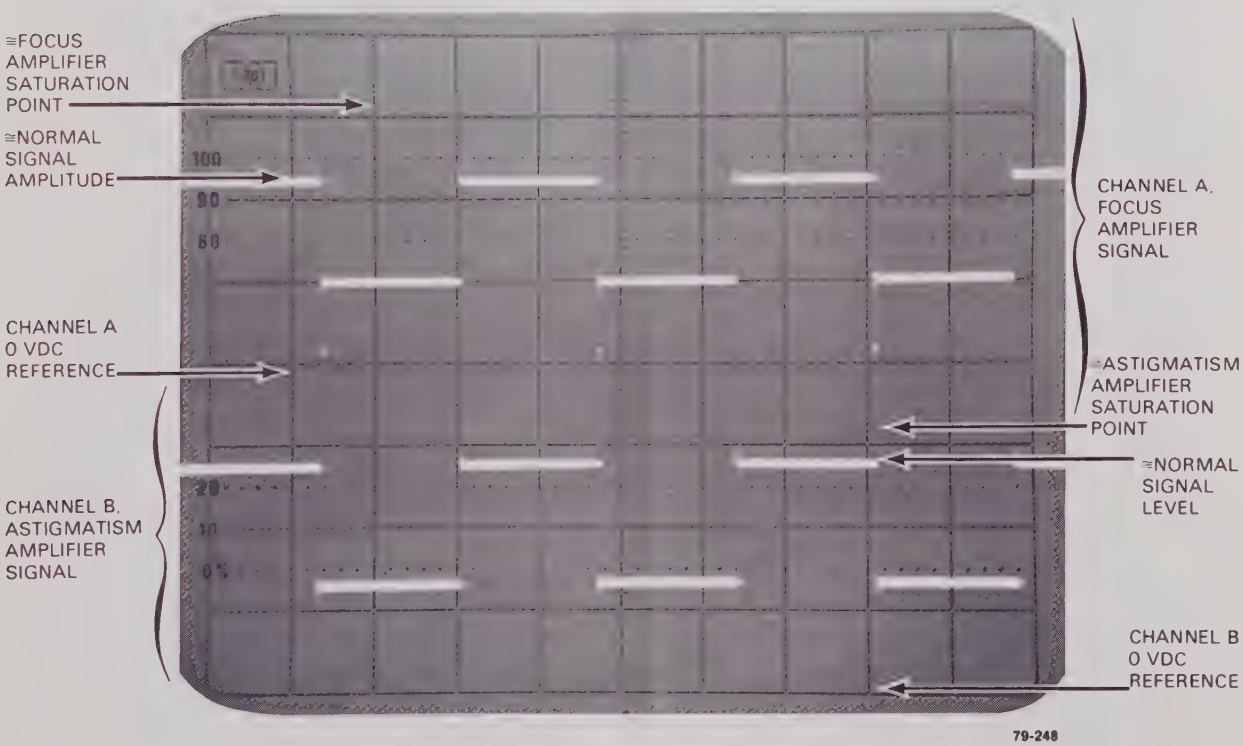

Figure 5-19. Focus and Astigmatism Waveforms

e. **Set all adjustments on the focus and astigmatism assembly (A6) to center. Adjust front panel FOCUS and ASTIGMATISM to center.**

f. Disconnect Pulse Generator No. 1 and position beam to location No. 1 on screen (see figure 5-20).

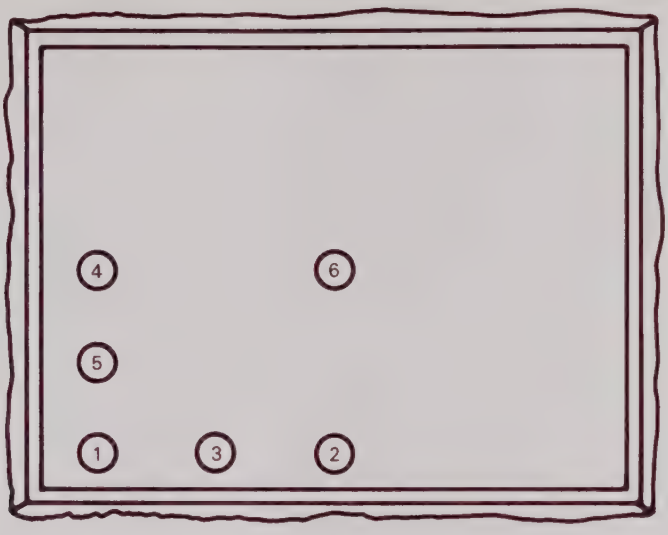

Figure 5-20. Beam Locations for Focus and Astigmatism Procedure

g. Adjust Focus Limit (A9R30) and Astigmatism Balance (A6R90) for best focused dot at location No. 1.

h. Connect Pulse Generator No. 1 to the X-INPUT and adjust amplitude to move beam to location No. 2.

i. After each of the following adjustments (steps j through n) check the signal levels displayed on the oscilloscope. If either signal reaches 0 V or +165 V (amplifier saturation), readjust Focus Balance A6R44) and/or Astigmatism Balance (A6R90) until each signal is between 0 V and +165 V.

j. Adjust FX2 and AX2 for best focused dot at location No. 2.

k. Adjust Pulse Generator No. 1 amplitude to move beam to location No. 3. Adjust FX1 and AX1 for best focused dot at location No. 3.

l. Disconnect Pulse Generator No. 1 from X-INPUT and check focus at location No. 1. If beam is not focused repeat this adjustment procedure from step g on.

m. Connect Pulse Generator No. 1 to the Y-INPUT and adjust amplitude to move beam to location No. 4. Adjust FY2 and AY2 for best focused dot at location No. 4.

n. Adjust Pulse Generator No. 1 amplitude to move beam to location No. 5 and adjust FY1 and AY1 for best focused dot at location No. 5.

o. Disconnect Pulse Generator No. 1 and check focus at location No. 1. If beam appears defocused, repeat this procedure from step g on.

p. Connect Pulse Generator No. 1 to both X- and Y-INPUT and adjust amplitude to move beam to location No. 6. (It may be necessary to readjust X- or Y-GAIN to move beam to location No. 6.)

q. Beam should appear well focused. If not, repeat this procedure starting with step g.

r. Reduce amplitude of Pulse Generator No. 2 and adjust front panel INTENSITY for a dimly viewable beam at location No. 6. Adjust Focus Gain (A6R43) for best focused spot.

s. Recheck beam focus at all locations. Should adjustment be necessary, repeat this procedure starting with step g.

t. After completion of adjustments set input impedance switches (A1S1; A3S1; A5S1) to desired positions.

ADJUSTMENTS

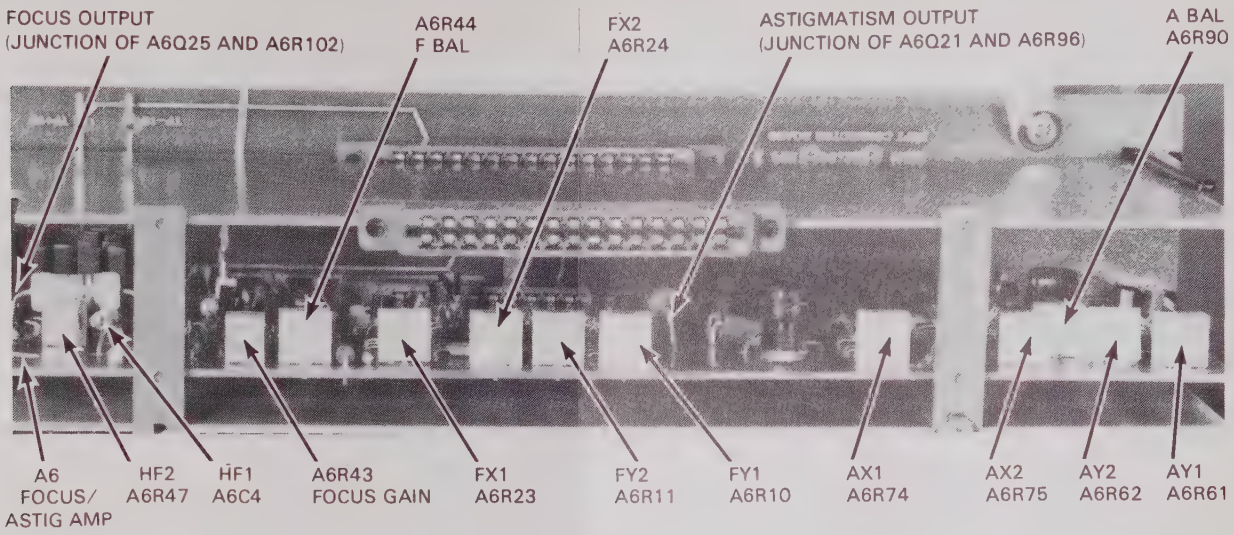

Figure 5-21. Focus and Astigmatism Adjustment Locations

79-676

Table 5-6. Focus and Astigmatism Adjustments

Reference Designator	Adjustment Name	Adjustment Paragraph	Service Sheet	Description
Front Panel Adjustment				
A13R8	TRACE ALIGN	5-22	7	Adjust trace to lie along X-AXIS of CRT
A13R9	ORTHOG	5-22	7	Adjust trace to lie along Y-AXIS of CRT
A9R30	FOCUS LIMIT	5-23; 5-24	7	Adjust for best focus in the corners of the display
A6R90	ASTIGMATISM BALANCE	5-23; 5-24	6	Adjust to keep astigmatism output signal between a signal level of 0 V to +165 V
A6R44	FOCUS BALANCE	5-23; 5-24	5	Adjust to keep focus output signal between a signal level of 0 V to +165 V
A6R24; A6R75	FX2; AX2	5-23; 5-24	5; 6	Adjust for best focused dot at location No. 2 (see figure 5-11 for location)
A6R23; A6R71	FX1; AX1	5-23; 5-24	5; 6	Adjust for best focused dot at location No. 3 (see figure 5-11)
A6R11; A6R62	FY2; AY2	5-23; 5-24	5; 6	Adjust for best focused dot at location No. 4 (see figure 5-11)
A6R10; A6R61	FY1; AY1	5-23; 5-24	5; 6	Adjust for best focused dot at location No. 5 (see figure 5-11)
A6R43	FOCUS GAIN	5-23; 5-24	5	Adjust for best focused dot at location No. 6 (see figure 5-11)

SECTION VI

REPLACEABLE PARTS

6-1. INTRODUCTION.

6-2. This section contains information for ordering parts. Table 6-1 lists abbreviations used in the parts list. Table 6-2 lists all replaceable parts in reference designator order. Table 6-3 contains the names and addresses that correspond to the manufacturer's code numbers. Figure 6-1 shows the illustrated parts breakdown.

6-3. ABBREVIATIONS.

6-4. Table 6-1 lists abbreviations used in the parts list, the schematics, and throughout the manual. In some cases, two forms of the abbreviations are used: one in all capital letters and one partial or no capitals. This occurs because the abbreviations in the parts list are always in capitals. However, in other parts of the manual other abbreviation forms are used with both lowercase and uppercase letters.

6-5. REPLACEABLE PARTS LIST.

6-6. Table 6-2 is the list of replaceable parts and is organized as follows:

a. Electrical assemblies in alphanumerical order by reference designation.

b. Chassis-mounted parts in alphanumerical order by reference designation.

c. Electrical assemblies and their components in alphanumerical order by reference designation.

d. Standard options in numerical order.

The information given for each part consists of the following:

a. Reference designation.

b. Hewlett-Packard part number.

c. Part number Check Digit (CD).

d. Total quantity (Qty) in instrument (or on assembly).

e. Description of part.

f. Typical manufacturer of part in an identifying five-digit code.

g. Manufacturer's number for the part.

The total quantity for each part is given only once — at the first appearance of the part number in the list.

6-7. ORDERING INFORMATION.

6-8. To order a part listed in the material lists, quote the Hewlett-Packard part number, indicate the quantity desired, and address the order to the nearest Hewlett-Packard Sales/Service Office.

6-9. To order a part that is not listed in the material lists, include the instrument model number, instrument serial number, a description of the part (including its function), and the number of parts required. Address the order to the nearest Hewlett-Packard Sales/Service Office.

6-10. DIRECT MAIL ORDER SYSTEM.

6-11. Within the USA, Hewlett-Packard can supply parts through a direct mail order system. Advantages of using this system are:

a. Direct ordering and shipment from the HP Parts Center in Mountain View, California.

b. No maximum or minimum on any mail order (there is a minimum order amount for parts ordered through a local HP office when the orders require billing and invoicing).

c. Prepaid transportation (there is a small handling charge for each order).

d. No invoices.

To provide these advantages, a check or money order must accompany each order.

6-12. Mail order forms and specific ordering information is available through your local HP office. Addresses and phone numbers are located at the back of this manual.

Table 6-1. Reference Designators and Abbreviations

REFERENCE DESIGNATORS

A	= assembly	**F**	= fuse	**MP**	= mechanical part	**U**	= integrated circuit
B	= motor	**FL**	= filter	**P**	= plug	**V**	= vacuum, tube, neon bulb, photocell, etc
BT	= battery	**IC**	= integrated circuit	**Q**	= transistor		
C	= capacitor	**J**	= jack	**R**	= resistor	**VR**	= voltage regulator
CP	= coupler	**K**	= relay	**RT**	= thermistor	**W**	= cable
CR	= diode	**L**	= inductor	**S**	= switch	**X**	= socket
DL	= delay line	**LS**	= loud speaker	**T**	= transformer	**Y**	= crystal
DS	= device signaling (lamp)	**M**	= meter	**TB**	= terminal board	**Z**	= tuned cavity network
E	= misc electronic part	**MK**	= microphone	**TP**	= test point		

ABBREVIATIONS

A	= amperes	**H**	= henries	**N/O**	= normally open	**RMO**	= rack mount only
AFC	= automatic frequency control	**HDW**	= hardware	**NOM**	= nominal	**RMS**	= root-mean square
AMPL	= amplifier	**HEX**	= hexagonal	**NPO**	= negative positive zero (zero temperature coefficient)	**RWV**	= reverse working voltage
		HG	= mercury				
BFO	= beat frequency oscillator	**HR**	= hour(s)				
BE CU	= beryllium copper	**HZ**	= hertz	**NPN**	= negative-positive-negative	**S-B**	= slow-blow
BH	= binder head					**SCR**	= screw
BP	= bandpass			**NRFR**	= not recommended for field replacement	**SE**	= selenium
BRS	= brass	**IF**	= intermediate freq			**SECT**	= section(s)
BWO	= backward wave oscillator	**IMPG**	= impregnated	**NSR**	= not separately replaceable	**SEMICON**	= semiconductor
		INCD	= incandescent			**SI**	= silicon
CCW	= counter-clockwise	**INCL**	= include(s)			**SIL**	= silver
CER	= ceramic	**INS**	= insulation(ed)	**OBD**	= order by description	**SL**	= slide
CMO	= cabinet mount only	**INT**	= internal	**OH**	= oval head	**SPG**	= spring
COEF	= coeficient			**OX**	= oxide	**SPL**	= special
COM	= common	**K**	= kilo=1000			**SST**	= stainless steel
COMP	= composition					**SR**	= split ring
COMPL	= complete	**LH**	= left hand	**P**	= peak	**STL**	= steel
CONN	= connector	**LIN**	= linear taper	**PC**	= printed circuit		
CP	= cadmium plate	**LK WASH**	= lock washer	**PF**	= picofarads= 10^{-12} farads	**TA**	= tantalum
CRT	= cathode-ray tube	**LOG**	= logarithmic taper			**TD**	= time delay
CW	= clockwise	**LPF**	= low pass filter	**PH BRZ**	= phosphor bronze	**TGL**	= toggle
				PHL	= phillips	**THD**	= thread
DEPC	= deposited carbon	**M**	= milli=10^{-3}	**PIV**	= peak inverse voltage	**TI**	= titanium
DR	= drive	**MEG**	= meg=10^{6}	**PNP**	= positive-negative-positive	**TOL**	= tolerance
		MET FLM	= metal film			**TRIM**	= trimmer
ELECT	= electrolytic	**MET OX**	= metallic oxide	**P/O**	= part of	**TWT**	= traveling wave tube
ENCAP	= encapsulated	**MFR**	= manufacturer	**POLY**	= polystyrene		
EXT	= external	**MHZ**	= mega hertz	**PORC**	= porcelain	**U**	= micro=10^{-6}
		MINAT	= miniature	**POS**	= position(s)		
F	= farads	**MOM**	= momentary	**POT**	= potentiometer	**VAR**	= variable
FH	= flat head	**MOS**	= metal oxide substrate	**PP**	= peak-to-peak	**VDCW**	= dc working volts
FIL H	= fillister head	**MTG**	= mounting	**PT**	= point		
FXD	= fixed	**MY**	= "mylar"	**PWV**	= peak working voltage	**W/**	= with
						W	= watts
G	= giga (10^{9})	**N**	= nano (10^{-9})	**RECT**	= rectifier	**WIV**	= working inverse voltage
GE	= germanium	**N/C**	= normally closed	**RF**	= radio frequency		
GL	= glass	**NE**	= neon	**RH**	= round head or right hand	**WW**	= wirewound
GRD	= ground(ed)	**NI PL**	= nickel plate			**W/O**	= without

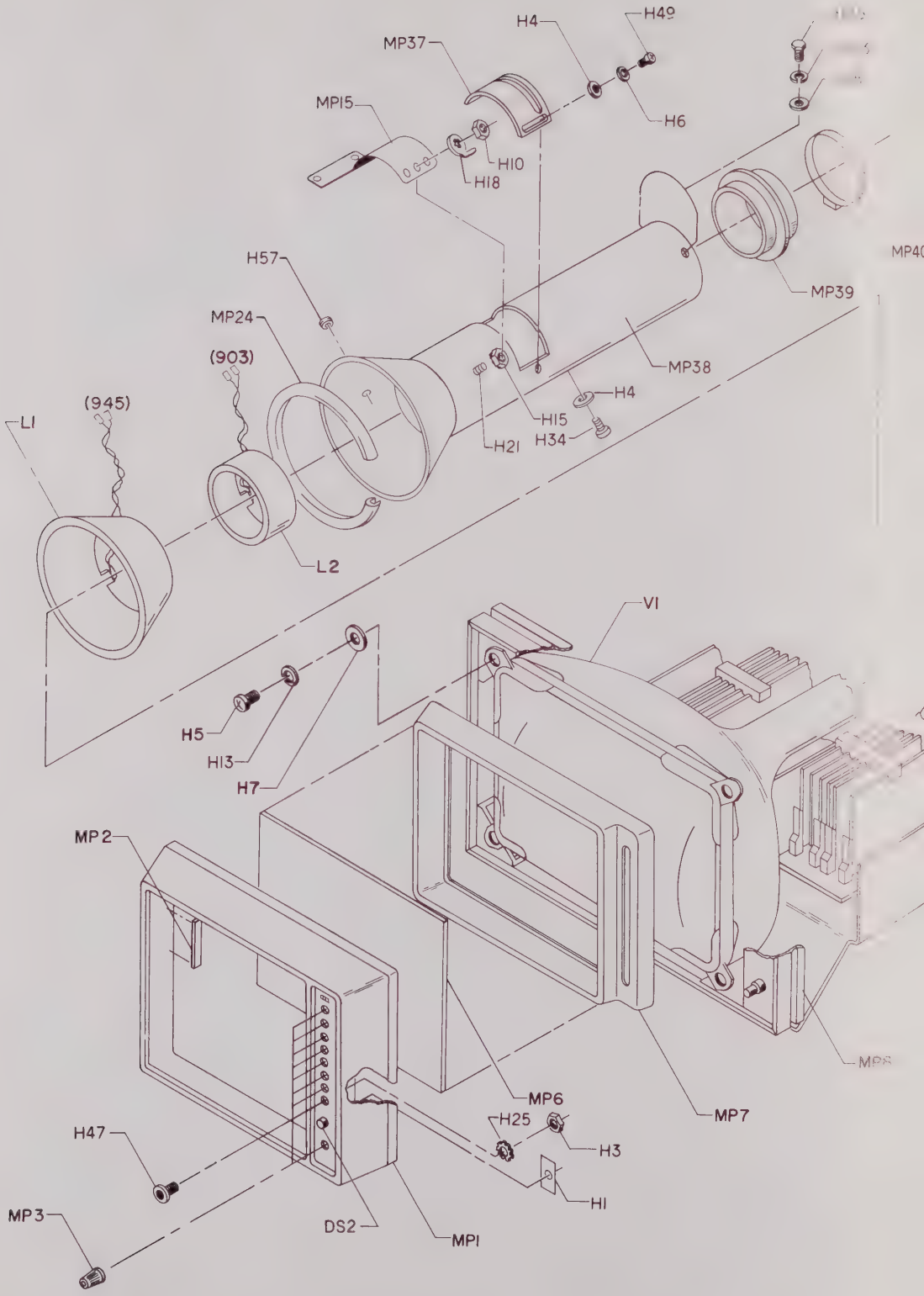
H4
H49
MP37
MP15
H6
H10
H18
H57
MP24
(903)
(945)
LI
L2
MP39
MP38
H4
H15
H21
H34
VI
H5
H13
H7
MP2
MP6
H25
H3
H47
MP7
MP3
DS2
MP1
HI

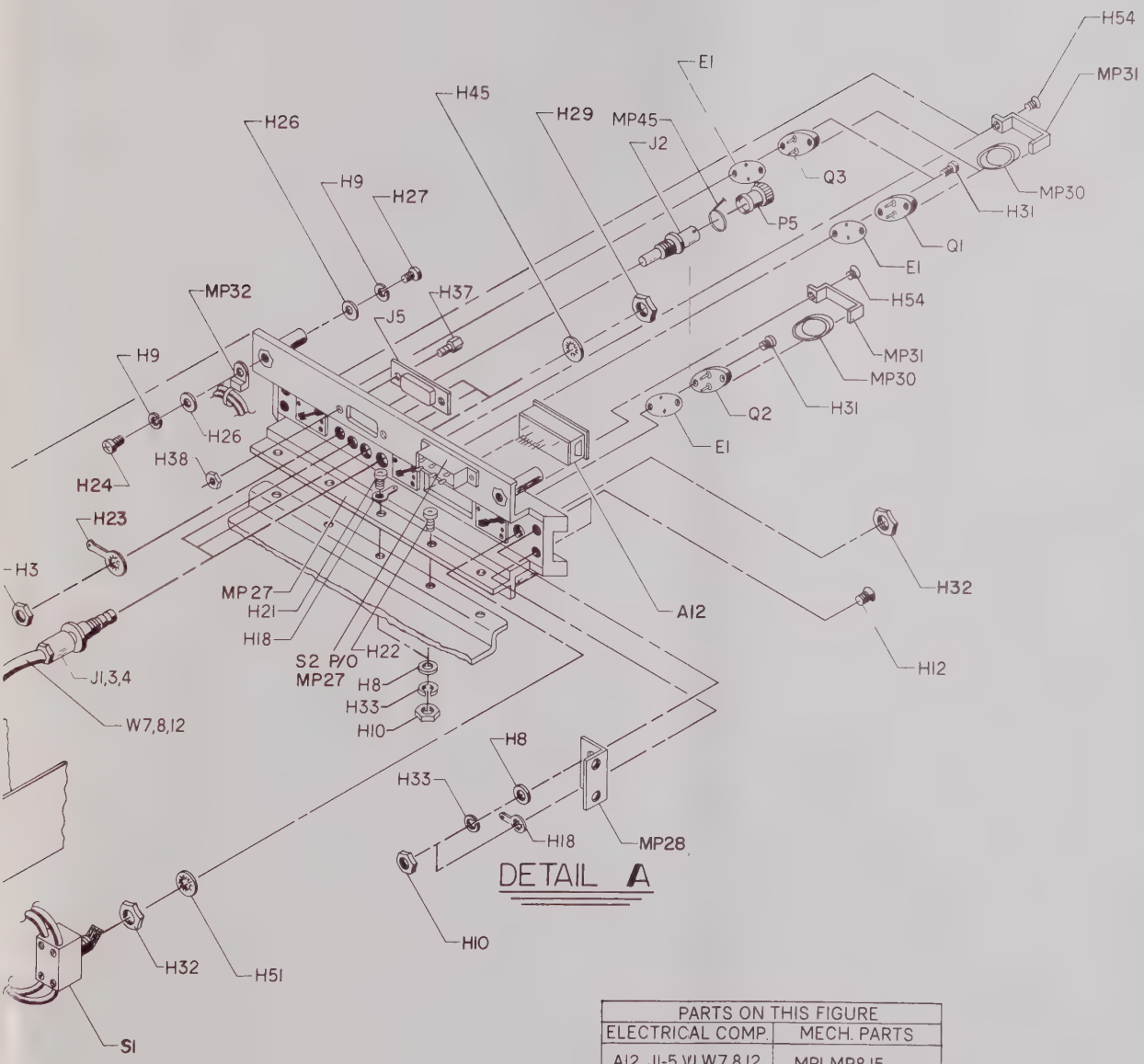

PARTS ON THIS FIGURE	
ELECTRICAL COMP.	MECH. PARTS
A12, J1-5, V1, W7,8,12 DS2 L1,L2 S1,S2 Q1,Q2,Q3	MP1-MP8,15, 24,27,28 30-32, 37-40

Figure 6-1.
Chasis Parts and Board Assembly Identification

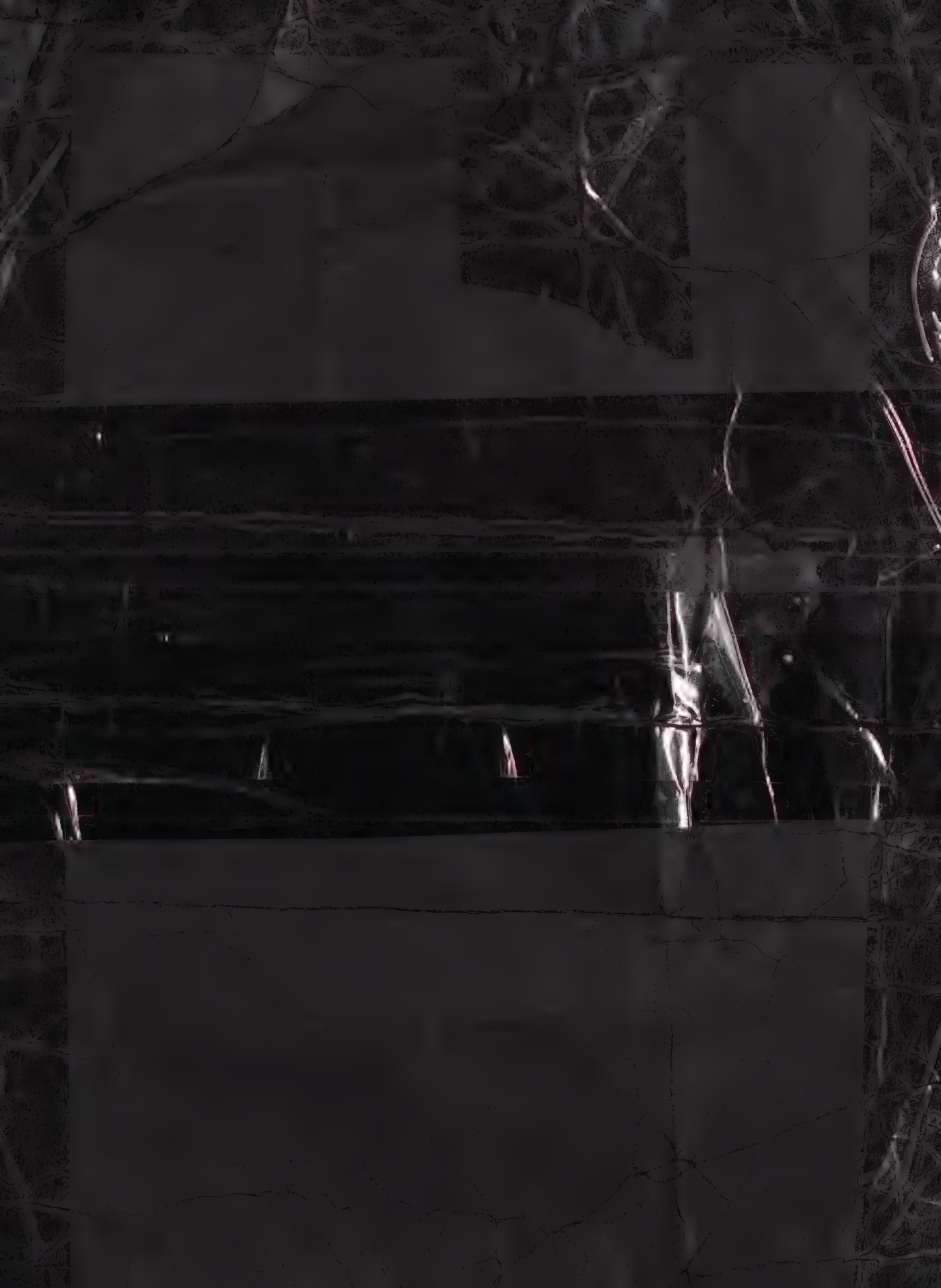

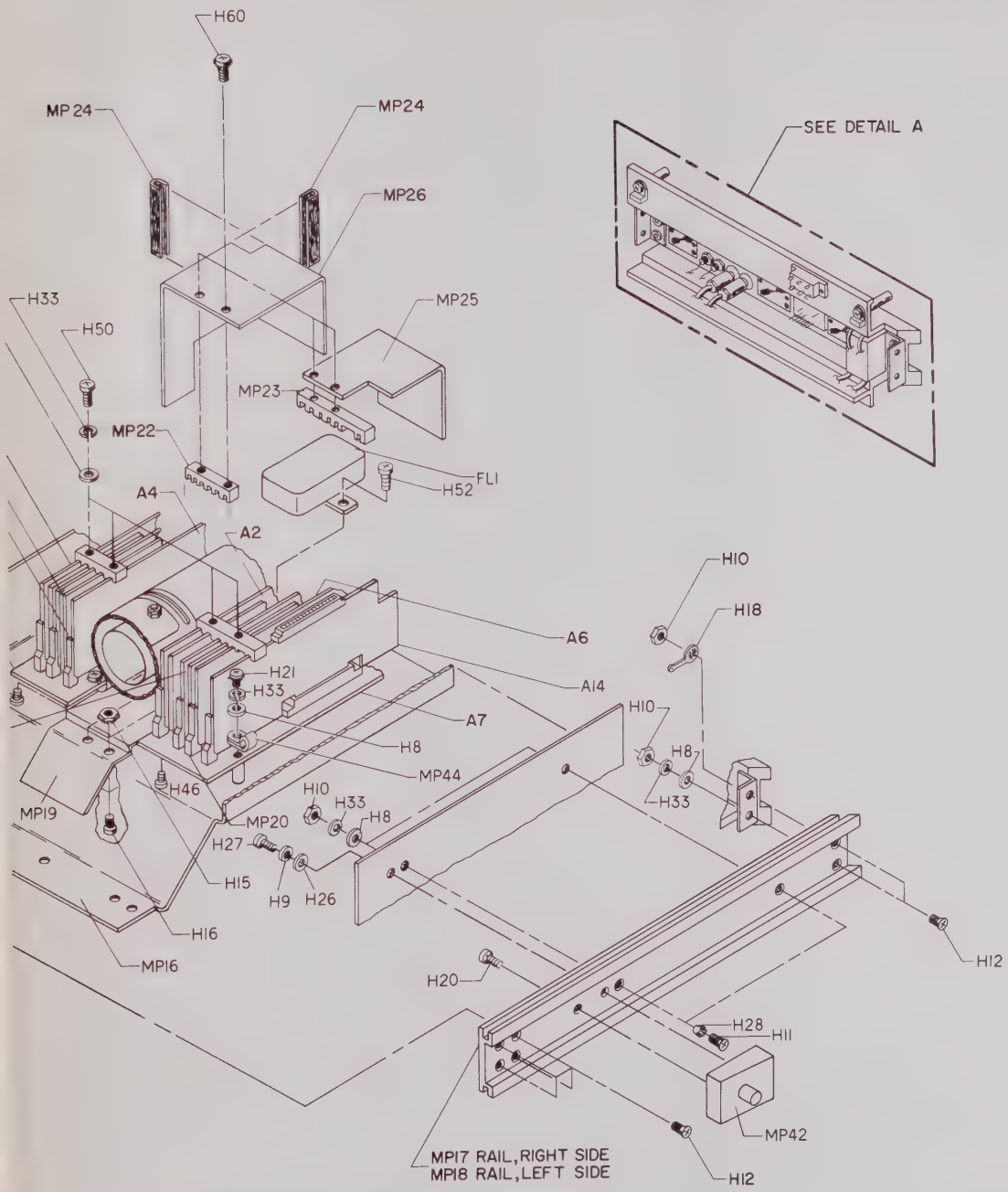

PARTS ON THIS FIGURE	
ELECTRICAL COMP.	MECH. PARTS
A1-A8 A14,R1	MP9-15, 16-26, 41-44

Figure 6-1. Chasis Parts and Board Assembly Identification (Sheet 2 of 3)

PARTS ON THIS FIGURE	
ELECTRICAL COMP.	MECH. PARTS.
A9,A10,A11 C1-C4 E2 Q4,Q5 T1	MP16, 33, 34, 36

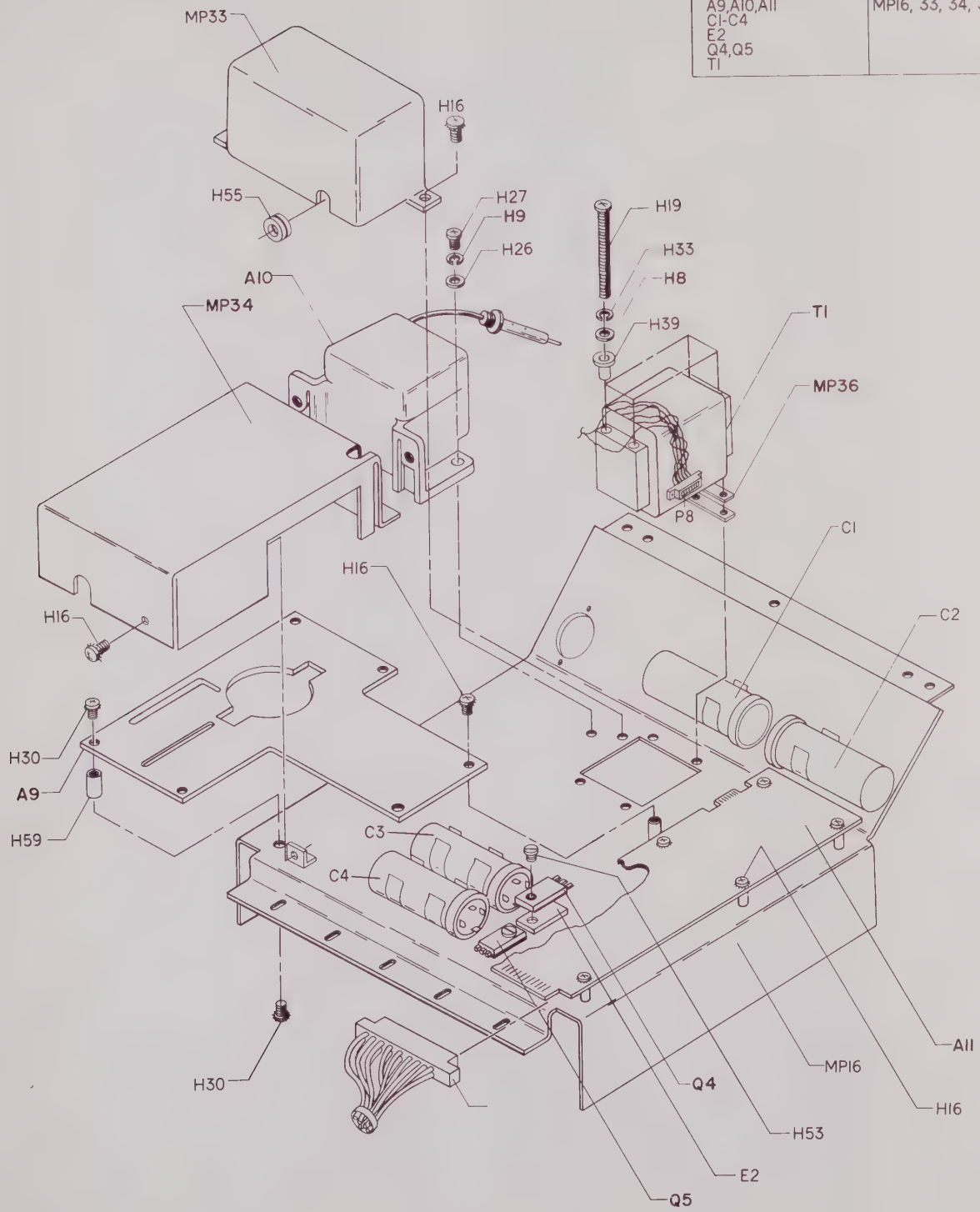

Figure 6-1. Chasis Parts and Board Assembly Identification (Sheet 3 of 3)

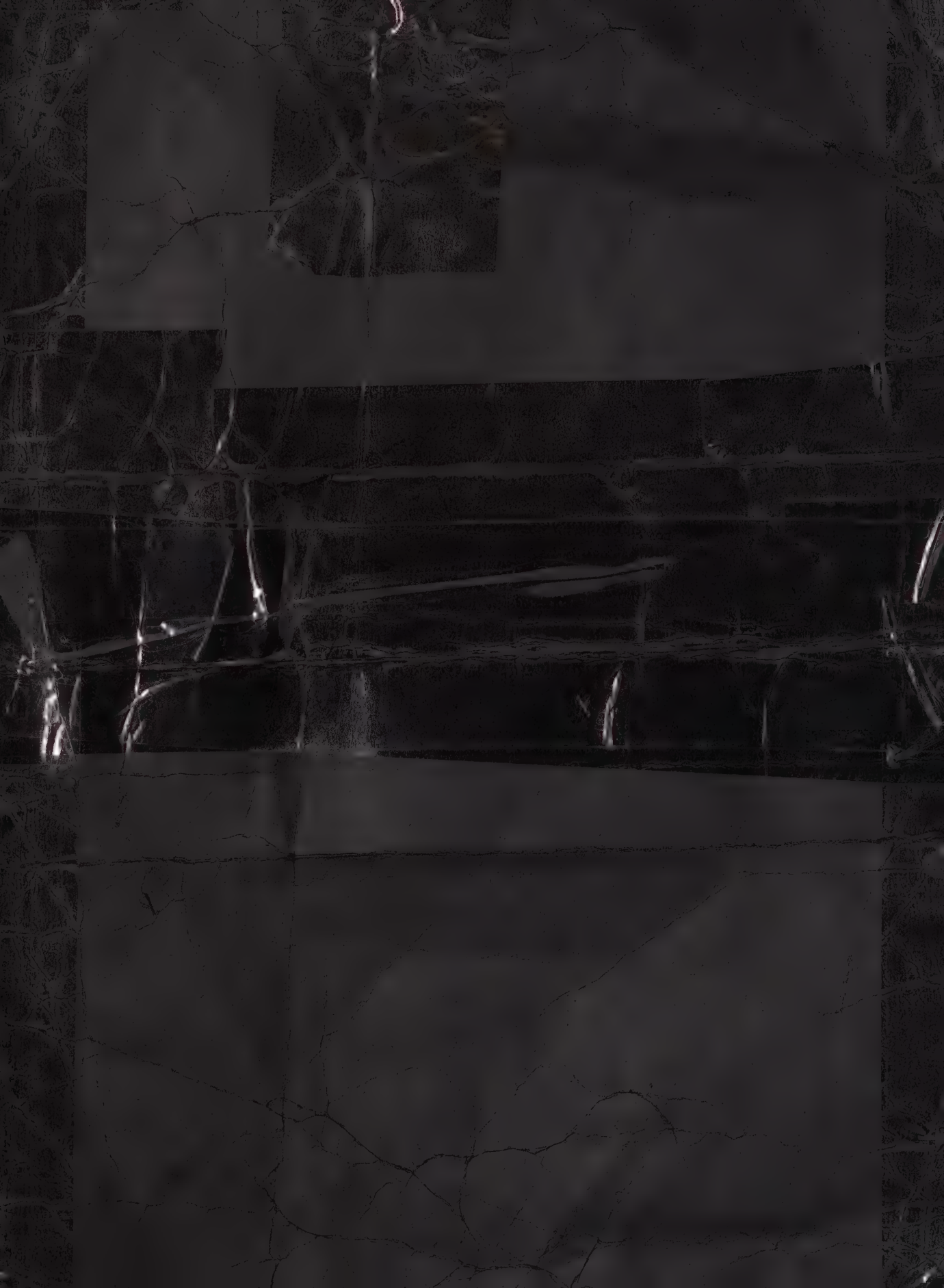

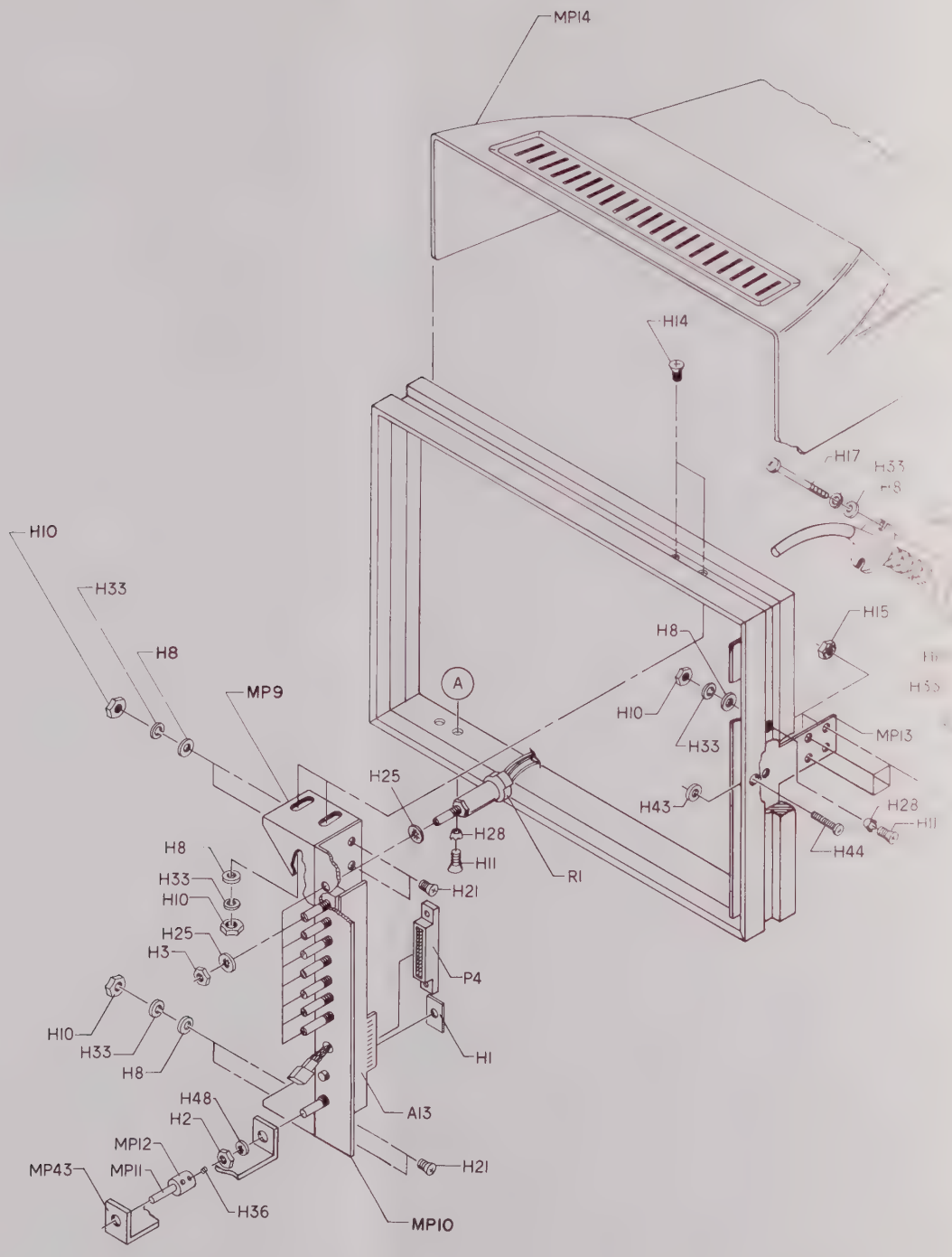
MP14
H14
H17
H33
H8
H10
H33
H8
MP9
A
H8
H10
H33
H15
MP13
H43
H28
H11
H44
H25
H28
H11
H21
R1
H8
H33
H10
H25
H3
P4
H10
H33
H8
H1
H48
H2
A13
MP12
MP43
MP11
H36
H21
MP10

Table 6-2. Replaceable Parts (Cont'd)

Reference Designator	HP Part Number	C D	Qty	Description	Mfr Code	Mfr Part Number
				CHASSIS PARTS		
A1	01317-66503	6	2	PC BOARD ASSEMBLY-INPUT AMPLIFIER	28480	01317-66503
A2	01310-66530	2	2	PC BOARD ASSEMBLY-OUTPUT AMPLIFIER	28480	01310-66530
A3	01317-66503	6		PC BOARD ASSEMBLY-INPUT AMPLIFIER	28480	01317-66503
A4	01310-66530	2		PC BOARD ASSEMBLY-OUTPUT AMPLIFIER	28480	01310-66530
A5	01311-66507	4	1	PC BOARD ASSEMBLY-Z AXIS	28480	01311-66507
A6	01317-66501	4	1	PC BOARD ASSEMBLY-FOCUS	28480	01317-66501
A7	01317-66504	7	1	PC BOARD ASSEMBLY-LEFT CONNECTOR	28480	01317-66504
A8	01317-66505	8	1	PC BOARD ASSEMBLY-RIGHT CONNECTOR	28480	01317-66505
A9	01311-66508	5	1	PC BOARD ASSEMBLY-HIGH VOLTAGE	28480	01311-66508
A10	0960-0560	3	1	MULTIPLIER-HV	28480	0960-0560
A11	01310-66533	5	1	PC BOARD ASSEMBLY-LOW VOLTAGE POWER SUPPLY	28480	01310-66533
A12	0960-0444	2	1	LINE MODULE-UNFILTERED	28480	0960-0444
A13	01311-66503	0	1	PC BOARD ASSEMBLY-CONTROL	28480	01311-66503
A14	01310-66513	1	1	PC BOARD ASSEMBLY-EXTENDER	28480	01310-66513
A15	01311-68710	5	1	TILT STAND ASSY - STANDARD	28480	01311-68710
C1	0180-0030	2	2	CAPACITOR-FXD 120UF+75-10% 350VDC AL	28480	0180-0030
C2	0180-0030	2		CAPACITOR-FXD 120UF+75-10% 350VDC AL	28480	0180-0030
C3	0180-0213	9	2	CAPACITOR-FXD 5000UF+75-10% 25VDC AL	28480	0180-0213
C4	0180-0213	9		CAPACITOR-FXD 5000UF+75-10% 25VDC AL	28480	0180-0213
C5	0150-0052	1	2	CAPACITOR-FXD .05UF +-20% 400VDC CER	28480	0150-0052
C6	0150-0052	1		CAPACITOR-FXD .05UF +-20% 400VDC CER	28480	0150-0052
DS1	1450-0440	8	1	LIGHT-IND WHT-TL .4-DIA FKD-TERM PUSH-ON	28480	1450-0440
DS2	1450-0440	8		LIGHT-IND WHT-TL .4-DIA FKD-TERM PUSH ON	28480	1450-0440
E1	0340-0875	9	3	INSULATOR-TRANSISTOR THERM-COND TO3	28480	0340-0875
E2	0340-0564	3	2	INSULATOR-TRANSISTOR THERM-COND	28480	0340-0564
E3	5040-0421	0	1	INSULATOR-POTENTIOMETER CASE	28480	5040-0421
E4	1200-0050	7	5	CONTACT-CRT SOCKET	28480	1200-0050
E5	0362-0441	1	7	CONNECTOR-SINGLE CONTACT (CRT NECK PIN)	28480	0362-0441
F1	2110-0006	3	1	FUSE 2AT FOR 100/120V OPERATION	71400	MDX2
F1	2110-0007	4	1	FUSE 1AT FOR 100/120V OPERATION	71400	MDX1
FL1	9135-0046	0	1	FILTER-POWER LINE INPUT	28480	9135-0046
H1	0510-0123	1	2	RETAINER-PUSH ON RECT EXT .312-IN-DIA	28480	0510-0123
H2	2950-0006	3	1	NUT-HEX-DBL-CHAM 1/4-32-THD .094-IN-THK	00000	ORDER BY DESCRIPTION
H3	2950-0001	8	18	NUT-HEX-DBL-CHAM 3/8-32-THD .094-IN-THK	00000	ORDER BY DESCRIPTION
H4	3050-0010	2	7	WASHER-FL MTLC NO 6 .147-IN-ID	00000	ORDER BY DESCRIPTION
H5	2680-0105	0	4	SCREW-MACH 10-32 .625-IN-LG PAN-HD-POZI	00000	ORDER BY DESCRIPTION
H6	2190-0019	6	4	WASHER-LK HLCL NO. 4 .115-IN-ID	28480	2190-0019
H7	3050-0179	4	4	WASHER-FL MTLC NO 10 .203-IN-ID	28480	3050-0179
H8	3050-0066	8	41	WASHER-FL MTLC NO. 6 .147-IN-ID	28480	3050-0066
H9	2190-0017	4	8	WASHER-LK HLCL NO. 8 .168-IN-ID	28480	2190-0017
H10	2420-0002	6	34	NUT-HEX-DBL-CHAM 6-32-THD .109-IN-THK	28480	2420-0002
H11	2360-0200	8	12	SCREW-MACH 6-32 .5-IN-LG 100 DEG	00000	ORDER BY DESCRIPTION
H12	2360-0120	1	16	SCREW-MACH 6-32 .438-IN-LG 82 DEG	00000	ORDER BY DESCRIPTION
H13	2190-0034	5	4	WASHER-LK HLCL NO. 10 .194-IN-ID	28480	2190-0034
H14	2360-0210	0	4	SCREW-MACH 6-32 .625-IN-LG 82 DEG	00000	ORDER BY DESCRIPTION
H15	2420-0001	5	13	NUT-HEX-W/LKWR 6-32-THD 109-IN-THK	00000	ORDER BY DESCRIPTION
H16	2360-0115	4	43	SCREW-MACH 6-32 .312-IN-LG PAN-HD-POZI	00000	ORDER BY DESCRIPTION
H17	2360-0137	0	2	SCREW-MACH 6-32 1.75-IN-LG PAN-HD-POZI	00000	ORDER BY DESCRIPTION
H18	0360-0001	5	6	TERMINAL-SLDR LUG LK-MTG FOR-#6-SCR	28480	0360 0001
H19	2360-0139	6	4	SCREW-MACH 6-32 2-IN-LG PAN-HD-POZI	00000	ORDER BY DESCRIPTION
H20	2510-0049	2	2	SCREW-MACH LKING 8-32 .5-IN-LG PAN-HD-POZI	00000	ORDER BY DESCRIPTION
H21	2360-0201	9	13	SCREW-MACH 6-32 .5-IN-LG PAN-HD-POZI	00000	ORDER BY DESCRIPTION
H22	2360-0121	2	3	SCREW-MACH LKING 6-32 .5-IN-LG PAN-HD-POZI	00000	ORDER BY DESCRIPTION
H23	0360-1632	0	1	TERMINAL-SLDR LUG LK-MTG FOR-#3/8-SCR	28480	0360-1632
H24	2510-0103	9	3	SCREW-MACH 8-32 .375-IN-LG PAN-HD-POZI	00000	ORDER BY DESCRIPTION
H25	2190-0016	3	17	WASHER-LK INTL T 3/8 IN .377-IN-ID	28480	2190-0016
H26	3050-0001	1	11	WASHER-FL MTLC NO 8 .172-IN-ID	28480	3050-0001
H27	2510-0107	3	8	SCREW-MACH 8-32 .5-IN-LG PAN-HD-POZI	00000	ORDER BY DESCRIPTION
H28	2190-0047	0	12	WASHER-LK 82 CTSK EXT T NO. 6 .142-IN-ID	28480	2190-0047
H29	2950-0054	1	3	NUT-HEX-DRL-CHAM 1/2-28-THD .125-IN-THK	00000	ORDER BY DESCRIPTION
H30	2360-0361	2	2	SCREW-MACH 6-32 (NYL) .375-IN-LG PAN-HD-SLT	00000	ORDER BY DESCRIPTION
H31	0624-0232	4	6	SCREW-TPG 6-20 .5-IN-LG PAN-HD-SLT STL	00000	ORDER BY DESCRIPTION
H32	2950-0035	8	3	NUT-HEX-DBL-CHAM 15/32-32-THD	00000	ORDER BY DESCRIPTION
H33	2190-0018	5	42	WASHER-LK HLCL NO.6 .141-IN-ID	28480	2190 0018
H34	0624-0206	2	1	SCREW-TPG 6-32 .25-IN-LG PAN-HD-POZI STL	00000	ORDER BY DESCRIPTION
H35	0624-0310	9	2	SCREW-TPG 6-19 .312-IN-LG HEX-HD STL	28480	0624-0310
H36	3030-0007	5	2	SCREW-SET 4-40 .125-IN-LG SMALL CUP-PT	00000	ORDER BY DESCRIPTION
H37	01338-21001	0	2	D CONNECTOR SCREWS	28480	01338-21001
H38	2260-0013	9	2	NUT-HEX-MET LKG 4-40-THD .157-IN-THK	00000	ORDER BY DESCRIPTION
H39	0340-0114	9	4	INSULATOR-FLANGED-BUSHING NYLON	00000	ORDER BY DESCRIPTION
H40	3050-0235	3	4	WASHER-FL MTLC NO 4 .117-IN-ID	28480	3050-0235

See introduction to this section for ordering information

Table 6-2. Replaceable Parts (Cont'd)

Reference Designator	HP Part Number	C D	Qty	Description	Mfr Code	Mfr Part Number
H41	0520-0129	8	2	SCREW-MACH 2-56 .312-IN-LG PAN-HD-POZI	00000	ORDER BY DESCRIPTION
H42	0610-0001	6	2	NUT-HEX-DBL-CHAM 2-56-THD .062-IN-THK	00000	ORDER BY DESCRIPTION
H43	3050-0016	8	2	WASHER-FL MTLC NO. 6 .142-IN-ID	00000	ORDER BY DESCRIPTION
H44	2360-0195	0	2	SCREW-MACH 6-32 .312-IN-LG PAN-HD-POZI	00000	ORDER BY DESCRIPTION
H45	2190-0068	5	3	WASHER-LK INTL T 1/2 IN .505-IN-ID	00000	ORDER BY DESCRIPTION
H46	2200-0105	4	14	SCREW-MACH 4-40 .312-IN-LG PAN-HD-POZI	00000	ORDER BY DESCRIPTION
H47	1410-0052	4	9	BUSHING .PANEL .272-ID .438-LG 3/8-32-THD	00000	ORDER BY DESCRIPTION
H48	2190-0084	5	1	WASHER-LK INTL T 1/4 IN .256-IN-ID	00000	ORDER BY DESCRIPTION
H49	2200-0141	8	2	SCREW-MACH 4-40 .312-IN-LG PAN-HD-POZI	00000	ORDER BY DESCRIPTION
H50	2360-0199	4	4	SCREW-MACH 6-32 .438-IN-LG PAN-HD-POZI	00000	ORDER BY DESCRIPTION
H51	2190-0102	8	1	WASHER-LK INTL T 15/32 IN .472-IN-ID	00000	ORDER BY DESCRIPTION
H52	2200-0103	2	2	SCREW-MACH 4-40 .25-IN-LG PAN-HD-POZI	00000	ORDER BY DESCRIPTION
H53	2360-0370	3	2	SCREW-MACH 6-32 .375-IN-LG PAN-HD-POZI	00000	ORDER BY DESCRIPTION
H54	2200-0542	3		SCREW-MACH 4-40 .25-IN-LG 100 DEG	00000	ORDER BY DESCRIPTION
H55	0400-0010	2	2	GROMMET-ROUND .25-IN-ID .375-IN-GRV-OD	00000	ORDER BY DESCRIPTION
H56	0400-0011	3	1	GROMMET-RND .375-IN-ID .5-IN-GRV-OD	00000	ORDER BY DESCRIPTION
H57	0400-0009	9	3	GROMMET-RND .125-IN-ID .25-IN-GRV-OD	00000	ORDER BY DESCRIPTION
H58	0400-0001	1	1	GROMMET-RND .562-IN-ID .75-IN-GRV-OD	00000	ORDER BY DESCRIPTION
H59	0340-0001	5	1	STANDOFF-RND 1-IN-LG 6-32THD .375-IN-OD	00000	ORDER BY DESCRIPTION
H60	2360-0117	6	4	SCREW-MACH 6-32 .375-IN-LG PAN-HD-POZI	00000	ORDER BY DESCRIPTION
J1	P/O W12			CONNECTOR-RF BNC FEM PLUG 50-OHM		
J2	1250-0118	3	1	CONNECTOR-RF BNC FEM SGL-HOLE-FR 50-OHM	28480	1250-0118
J3	P/O W7			CONNECTOR-RF BNC FEM PLUG 50-OHM		
J4	P/O W8			CONNECTOR-RF BNC FEM PLUG 50-OHM		
J5(P/O W10)	1251-0064	0	1	CONNECTOR-25 PIN, F D SERIES	28480	1251-0064
J7				NOT ASSIGNED		
J8				NOT ASSIGNED		
J9				NOT ASSIGNED		
J10(P/O V1)	1251-2964	3	1	CONNECTOR-SPL PURP,SGL HI-V,F RECP,POLETH	28480	1251-2964
L1	5080-0435	8	1	COIL ASSY-TRACE ALIGN	28480	5060-0435
L2	01336-66002	3	1	COIL ASSY-ORTHOG ALIGN	28480	01336-66002
MP1	01311-44109		1	OUTER FRONT PANEL MASK	28480	01311-44109
MP2	5001-0439		8	BEZEL STRIP	28480	5001-0439
MP3	0370-1093	4	1	KNOB-BASE-PTR 3/8 OBP .125-IN-ID	28480	0370-1093
MP4	01311-00206	2	1	PANEL-FRONT	28480	01311-00206
MP5	1410-0052		1	POT BUSHING	28480	1410-0052
MP6	1000-0565		1	FILTER GLASS	28480	1000-0565
MP7	01311-44108		1	MASK INNER	28480	01311-44108
MP8	01311-63707	0	1	EXTRUSION ASSEMBLY-FRAME	28480	01311-63707
MP9	01310-01203	0	2	BRACKET-CORNER SUPPORT	28480	01310-01203
MP10	01311-00201		1	FRONT SUB PANEL	28480	01311-00201
MP11	01311-23708	7	1	SHAFT-EXTENSION	28480	01311-23708
MP12	1490-0841	7	1	COUPLER-RGD .375-LG BRS	28480	1490-0841
MP13	01311-01201	9	2	BRACKET-T SPLICE	28480	01311-01201
MP14	01311-44106	3	2	COVER	28480	01311-44106
MP15	01311-01203	1	1	GROUND STRAP	28480	01311-01203
MP16	01311-00104	9	1	DECK-MAIN	28480	01311-00104
MP17	01311-23707	6	1	RAIL-RIGHT SIDE	28480	01311-23707
MP18	01311-23706	5	1	RAIL-LEFT SIDE	28480	01311-23706
MP19	01311-00603	3	1	SHIELD-TRANSFORMER	28480	01311-00603
MP20	5040-0170	6	14	GUIDE: PLUG-IN PC BOARD	28480	5040-0170
MP21	01310-00601	0	4	SHIELD-AMPLIFIER	28480	01310-00601
MP22	5040-5892	9	2	HOLDER-PC BOARD, RIGHT	28480	5040-5892
MP23	5040-5891	8	2	HOLDER-PC BOARD, LEFT	28480	5040-5891
MP24	4320-0095	7	AR	U CHANNEL NPRN .047-WD-CHAN .219-WD.	28480	4320-0095
MP25	01321-00601	3	1	SHIELD-FOCUS	28480	01321-00601
MP26	01321-00603	5	1	SHIELD-Z AXIS	28480	01321-00603
MP27	01311-23722	5	1	RAIL-REAR	28480	01311-23722
MP28	01311-01204	2	2	BRACKET-REAR	28480	01311-01204
MP29				NOT ASSIGNED		
MP30	0340-0486	8	3	INSULATOR-COVER NYLON	28480	0340-0486
MP31	01310-01215	4	3	CLAMP-TRANSISTOR COVER	28480	01310-01215
MP32	1400-0335	5	3	CABLE TIE 1.75-DIA .188-WD NYL	28480	1400-0335
MP33	01311-04102	5	1	COVER-MULTIPLIER	28480	01311-04102
MP34	01311-04101	4	1	COVER-HIGH VOLTAGE	28480	01311-04101
MP35				NOT ASSIGNED		
MP36	01310-04702	0	4	SPACER-TRANSFORMER	28480	01310-04702
MP37	01310-00608	7	1	SHIELD-NECK PIN	28480	01310-00608
MP38	01310-00607	2	1	SHIELD-CRT	28480	01310-00607
MP39	01310-21201	0	1	SPACER RING-CRT CLAMP	28480	01310-21201
MP40	1400-0026	1	1	CLAMP-CRT	28480	1400-0026

See introduction to this section for ordering information

Table 6-2. Replaceable Parts (Cont'd)

Reference Designator	HP Part Number	C D	Qty	Description	Mfr Code	Mfr Part Number
MP41	01311-01207	5	1	BRACKET-POST ACCELERATOR CONNECTOR	28480	01311-01207
MP42	01311-61202	6	2	PIVOT BLOCK-TILT STAND MOUNTING	28480	01311-61202
MP43	01311-61203	7	1	BRACKET-INTENSITY CONTROL SHAFT	28480	01311-61203
MP44	1400-0017	0	2	CABLE CLAMP .312-DIA .375-WD	28480	1400-0017
MP45	4040-1008	0	1	STRAP SHORTING PLUG TETHER	28480	4040-1008
P1	1251-1190		2	CONN PC 24 F	28480	1251-1190
P2	1251-1190			CONN PC 24 F	28480	1251-1190
P3	1251-0159		1	CONN PC 30 F	28480	1251-0159
P4	01317-27601		1	CONN PC 20 F	28480	01317-27601
P5	1250-0929	4	1	SHORTING CAP-BNC	28480	1250-0929
P6				NOT ASSIGNED		
P7				NOT ASSIGNED		
P8	1251-1765	0	1	CONNECTOR PC 6 CONTACT FEMALE	28480	1251-1765
Q1	1854-0417	5	1	TRANSISTOR NPN SI TO-3 PD=80W	28480	1854-0417
Q2	1854-0063	7	2	TRANSISTOR NPN 2N3055 SI TO-3 PD=115W	01928	2N3055
Q3	1854-0063	7		TRANSISTOR NPN 2N3055 SI TO-3 PD=115W	01928	2N3055
Q4	1854-0558	5	1	TRANSISTOR NPN SI DARL PD=70W FT=1MHZ	28480	1854-0558
Q5	1854-0433	5	1	TRANSISTOR NPN SI PD=90W FT=2MHZ	28480	1854-0433
R1	2100-3811	3	1	RESISTOR-VAR CONTROL CCP 500K 20% LIN	28480	2100-3811
S1	3101-2332	4	1	SWITCH-TGL BASIC DPST 6A 250VAC/DC SCR	28480	3101-2332
T1	9100-4254	7	1	TRANSFORMER-POWER	28480	9100-4254
V1	5083-3251		1	CRT P31	28480	5083-3251
W1	8120-1378	1	1	POWER CORD ASSY	28480	8120-1378
W2	01310-61629	0	2	CABLE-ASSEMBLY OUTPUT	28480	01310-61629
W3	01310-61629	0		CABLE-ASSEMBLY OUTPUT	28480	01310-61629
W4	01311-61612	2	1	CABLE ASSEMBLY-MAIN	28480	01311-61612
W5				NOT ASSIGNED		
W6				NOT ASSIGNED		
W7	01310-61606	3	2	CABLE ASSEMBLY-INPUT	28480	01310-61606
W8	01310-61606	3		CABLE ASSEMBLY-INPUT	28480	01310-61606
W9	01310-61622	3	1	CABLE ASSEMBLY-HV	28480	01310-61622
W10	01321-61612	4	1	CABLE ASSEMBLY-BINARY TTL INPUT	28480	01321-61612
W11	01311-61602	0	1	CABLE ASSEMBLY-TTL BLANKING INPUT	28480	01311-61602
W12	01310-61626	7	1	CABLE ASSEMBLY-INPUT (Z AXIS)	28480	01310-61626

See introduction to this section for ordering information

Table 6-2. Replaceable Parts (Cont'd)

Reference Designator	HP Part Number	C D	Qty	Description	Mfr Code	Mfr Part Number
A1	01317-66503	6	1	BOARD ASSEMBLY-INPUT AMPLIFIER	28480	01317-66503
A1C1	0160-3451	1	5	CAPACITOR-FXD 01μF +80-20% 100VDC CER	28480	0160-3451
A1C2	0160-3451	1		CAPACITOR-FXD 01μF +80-20% 100VDC CER	28480	0160-3451
A1C3	0160-3451	1		CAPACITOR-FXD 01μF +80-20% 100VDC CER	28480	0160-3451
A1C4	0160-0174	9	2	CAPACITOR-FXD 47μF +80-20% 25VDC CER	28480	0160-0174
A1C5	0160-3443	1	7	CAPACITOR-FXD 1μF +80-20% 50VDC CER	28480	0160-3443
A1C6	0160-3451	1		CAPACITOR-FXD 01μF +80-20% 100VDC CER	28480	0160-3451
A1C7	0160-3443	1		CAPACITOR-FXD 1μF +80-20% 50VDC CER	28480	0160-3443
A1C8	0160-2197	0	2	CAPACITOR-FXD 10PF +5% 300VDC MICA	28480	0160-2197
A1C9	0160-2197	0		CAPACITOR-FXD 10PF ±5% 300VDC MICA	28480	0160-2197
A1C10	0160-0168	1	7	CAPACITOR-FXD 1μF ±10% 200VDC POLYE	28480	0160-0168
A1C11	0160-3443	1		CAPACITOR-FXD 1μF +80-20% 50VDC CER	28480	0160-3443
A1C12	0160-3443	1		CAPACITOR-FXD 1μF +80-20% 50VDC CER	28480	0160-3443
A1C13	0160-0168	1		CAPACITOR-FXD 1μF ±10% 200VDC POLYE	28480	0160-0168
A1C14	0160-0168	1		CAPACITOR-FXD 1μF ±10% 200VDC POLYE	28480	0160-0168
A1C15	0160-0168	1		CAPACITOR-FXD 1μF ±10% 200VDC POLYE	28480	0160-0168
A1C16	0160-3451	1		CAPACITOR-FXD 01μF +80-20% 100VDC CER	28480	0160-3451
A1C17	0160-0168	1		CAPACITOR-FXD 1μF +10% 200VDC POLYE	28480	0160-0168
A1C18	0160-0168	1		CAPACITOR-FXD 1μF ±10% 200VDC POLYE	28480	0160-0168
A1C19	0160-0174	9		CAPACITOR-FXD 47μF +80-20% 25VDC CER	28480	0160-0174
A1C20	0140-0196	3	1	CAPACITOR-FXD 150PF +5% 300VDC MICA	72136	DM15F151J0300WV1CR
A1C21	0160-0168	1		CAPACITOR-FXD 1μF ±10% 200VDC POLYE	28480	0160-0168
A1C22	0160-2254	0	1	CAPACITOR-FXD 7 5PF ± 25PF 500VDC CER	28480	0160-2254
A1C23	0160-3443	1		CAPACITOR-FXD 1μF +80-20% 50VDC CER	28480	0160-3443
A1C24	0160-3443	1		CAPACITOR-FXD 1μF +80-20% 50VDC CER	28480	0160-3443
A1C25	0160-3443	1	7	CAPACITOR-FXD 1μF +80-20% 50VDC CER	28480	0160-3443
A1CR1	1901-0376	6	4	DIODE-GEN PRP 35V 50MA DO-35	28480	1901-0376
A1CR2	1901-0376	6		DIODE-GEN PRP 35V 50MA DO-35	28480	1901-0376
A1CR3	1901-0376	6		DIODE-GEN PRP 35V 50MA DO-35	28480	1901-0376
A1CR4	1901-0376	6		DIODE-GEN PRP 35V 50MA DO-35	28480	1901-0376
A1CR5	1901-0033	2	8	DIODE-GEN PRP 180V 200MA DO-7	28480	1901-0033
A1CR6	1901-0033	2		DIODE-GEN PRP 180V 200MA DO-7	28480	1901-0033
A1CR7	1901-0033	2		DIODE-GEN PRP 180V 200MA DO-7	28480	1901-0033
A1CR8	1901-0033	2		DIODE-GEN PRP 180V 200MA DO-7	28480	1901-0033
A1CR9	1901-0040	1	7	DIODE-SWITCHING 30V 50MA 2NS DO-35	28480	1901-0040
A1CR10	1901-0040	1		DIODE-SWITCHING 30V 50MA 2NS DO-35	28480	1901-0040
A1CR11	1901-0040	1		DIODE-SWITCHING 30V 50MA 2NS DO-35	28480	1901-0040
A1CR12	1901-0040	1		DIODE-SWITCHING 30V 50MA 2NS DO-35	28480	1901-0040
A1CR13	1901-0033	2		DIODE-GEN PRP 180V 200MA DO-7	28480	1901-0033
A1CR14	1901-0033	2		DIODE-GEN PRP 180V 200MA DO-7	28480	1901-0033
A1CR15	1901-0033	2		DIODE-GEN PRP 180V 200MA DO-7	28480	1901-0033
A1CR16	1901-0033	2		DIODE-GEN PRP 180V 200MA DO-7	28480	1901-0033
A1CR17	1901-0040	1		DIODE-SWITCHING 30V 50MA 2NS DO-35	28480	1901-0040
A1CR18	1901-0040	1		DIODE-SWITCHING 30V 50MA 2NS DO-35	28480	1901-0040
A1CR19	1901-0040	1		DIODE-SWITCHING 30V 50MA 2NS DO-35	28480	1901-0040
A1CR20	1901-0513	3	2	DIODE-DUAL 100V	28480	1901-0513
A1CR21				NOT ASSIGNED		
A1CR22				NOT ASSIGNED		
A1CR23	1901-0513	3		DIODE-DUAL 100V	28480	1901-0513
A1L1	9100-2276	9	2	COIL-MLD 100μH 10% Q=50 095DX 25LG-NOM	28480	9100-2276
A1L2	9100-2276	9		COIL-MLD 100μH 10% Q=50 095DX 25LG-NOM	28480	9100-2276
A1Q1	1855-0262	0	1	TRANSISTOR-JFET DUAL N-CHAN D-MODE SI	28480	1855-0262
A1Q2				NOT ASSIGNED		
A1Q3	1853-0036	2	4	TRANSISTOR PNP SI PD=310MW FT=250MHZ	28480	1853-0036
A1Q4	1853-0036	2		TRANSISTOR PNP SI PD=310MW FT=250MHZ	28480	1853-0036
A1Q5	1854-0071	7	7	TRANSISTOR NPN SI PD=300MW FT=200MHZ	28480	1854-0071
A1Q6	1854-0071	7		TRANSISTOR NPN SI PD=300MW FT=200MHZ	28480	1854-0071
A1Q7	1854-0071	7		TRANSISTOR NPN SI PD=300MW FT=200MHZ	28480	1854-0071
A1Q8	1853-0316	1	1	TRANSISTOR-DUAL PNP PD=500MW	28480	1853-0316
A1Q9	1854-0071	7		TRANSISTOR NPN SI PD=300MW FT=200MHZ	28480	1854-0071
A1Q10	1854-0071	7		TRANSISTOR NPN SI PD=300MW FT=200MHZ	28480	1854-0071
A1Q11	1853-0276	2	3	TRANSISTOR PNP SI TO-52 PD=360MW	04713	MM3906
A1Q12	1853-0276	2		TRANSISTOR PNP SI TO-52 PD=360MW	04713	MM3906
A1Q13	1853-0276	2		TRANSISTOR PNP SI TO-52 PD=360MW	04713	MM3906
A1Q14	1853-0036	2		TRANSISTOR PNP SI PD=310MW FT=250MHZ	28480	1853-0036
A1Q15	1853-0036	2		TRANSISTOR PNP SI PD=310MW FT=250MHZ	28480	1853-0036
A1Q16	1854-0071	7		TRANSISTOR NPN SI PD=300MW FT=200MHZ	28480	1854-0071
A1Q17	1854-0071	7		TRANSISTOR NPN SI PD=300MW FT=200MHZ	28480	1854-0071
A1R1	0698-5965	5	1	RESISTOR 50 1% 5W F TC=0±100	28480	0698-5965
A1R2	0687-4701	2	1	RESISTOR 47 10% 5W CC TC=0+412	01121	EB4701
A1R3	0757-0340	6	1	RESISTOR 10K 1% 25W F TC=0±100	24546	C5-1/4-TO-1002-F
A1R4	0684-1041	1	2	RESISTOR 100K 10% 25W FC TC=-400/+800	01121	CB1041
A1R5	0684-1041	1		RESISTOR 100K 10% 25W FC TC=-400/+800	01121	CB1041

See introduction to this section for ordering information

Table 6-2. Replaceable Parts (Cont'd)

Reference Designator	HP Part Number	C D	Qty	Description	Mfr Code	Mfr Part Number
A1R6	0684 3901	6	2	RESISTOR 39 10% 25W FC TC=-400/+500	01121	CB3901
A1R7	0684-3901	6		RESISTOR 39 10% 25W FC TC=-400/+500	01121	CB3901
A1R8				NOT ASSIGNED		
A1R9				NOT ASSIGNED		
A1R10	0757-0280	3	7	RESISTOR 1K 1% 125W F TC=0±100	24546	C4-1/8-TO-1001-F
A1R11	2100-3352	7	2	RESISTOR-TRMR 1K 10% C SIDE-ADJ 1-TRN	28480	2100-3352
A1R12	2100-3352	7		RESISTOR-TRMR 1K 10% C SIDE-ADJ 1-TRN	28480	2100-3352
A1R13	0698-3447	4	1	RESISTOR 422 1% 125W F TC=0±100	24546	C4-1/8-TO-422R-F
A1R14	0757-0283	6	1	RESISTOR 2K 1% 125W F TC =0±100	24546	C4-1/8-TO-2001-F
A1R15	0757-0419	0	1	RESISTOR 681 1% 125W F TC=0±100	24546	C4-1/8-TO-681R-F
A1R16	0757-0412	3	2	RESISTOR 365 1% 125W F TC=0±100	24546	C4-1/8-TO-365R-F
A1R17				NOT ASSIGNED		
A1R18				NOT ASSIGNED		
A1R19	0757-0442	9	4	RESISTOR 10K 1% 125W F TC=0±100	24546	C4-1/8-TO-1002-F
A1R20				NOT ASSIGNED		
A1R21				NOT ASSIGNED		
A1R22	0757-0442	9		RESISTOR 10K 1% 125W F TC=0±100	24546	C4-1/8-TO-1002-F
A1R23	0757-0280	3		RESISTOR 1K 1% 125W F TC=0±100	24546	C4-1/8-TO-1001-F
A1R24	0757-0417	8	2	RESISTOR 562 1% 125W F TC=0±100	24546	C4-1/8-TO-562R-F
A1R25	0757-0417	8		RESISTOR 562 1% 125W F TC=0±100	24546	C4-1/8-TO-562R-F
A1R26	0757-0394	0	2	RESISTOR 51 1 1% 125W F TC=0+100	24546	C4-1/8-TO-51R1-F
A1R27	0757-0401	0	2	RESISTOR 100 1% 125W F TC=0±100	24546	C4-1/8-TO-101-F
A1R28	0757-0442	9		RESISTOR 10K 1% 125W F TC=0±100	24546	C4-1/8-TO-1002-F
A1R29	0757-0401	0		RESISTOR 100 1% 125W F TC=0+100	24546	C4-1/8-TO-101-F
A1R30				NOT ASSIGNED		
A1R31	0757-0394	0		RESISTOR 51 1 1% 125W F TC=0±100	24546	C4-1/8-TO-51R1-F
A1R32	0698-0084	9	2	RESISTOR 2 15K 1% 125W F TC=0±100	24546	C4-1/8-TO-2151-F
A1R33	0757-0408	7	2	RESISTOR 243 1% 125W F TC=0±100	24546	C4-1/8-TO-243R-F
A1R34	0757-0273	4	1	RESISTOR 3 01K 1% 125W F TC=0+100	24546	C4-1/8-TO-3011-F
A1R35	0757-0408	7		RESISTOR 243 1% 125W F TC=0±100	24546	C4-1/8-TO-243R-F
A1R36	0757-0416	7	3	RESISTOR 511 1% 125W F TC=0±100	24546	C4-1/8-TO-511R-F
A1R37	0757-0416	7		RESISTOR 511 1% 125W F TC=0±100	24546	C4-1/8-TO-511R-F
A1R38	0757-0412	3		RESISTOR 365 1% 125W F TC=0+100	24546	C4-1/8-TO-365R-F
A1R39	0684-5621	1	3	RESISTOR 5 6K 10% 25W FC TC=-400/+700	01121	CB5621
A1R40	0684-1531	4	2	RESISTOR 15K 10% 25W FC TC=-400/+800	01121	CB1531
A1R41	0757-0442	9		RESISTOR 10K 1% 125W F TC=0±100	24546	C4-1/8-TO-1002-F
A1R42	0757-0415	6	2	RESISTOR 475 1% 125W F TC=0±100	24546	C4-1/8-TO-475R-F
A1R43	0757-0415	6		RESISTOR 475 1% 125W F TC=0±100	24546	C4-1/8-TO-475R-F
A1R44	0698-0085	0	1	RESISTOR 2 61K 1% 125W F TC=0±100	24546	C4-1/8-TO-2611-F
A1R45	0757-0421	4	1	RESISTOR 825 1% 125W F TC=0±100	24546	C4-1/8-TO-825R-F
A1R46	0757-0280	3		RESISTOR 1K 1% 125W F TC=0±100	24546	C4-1/8-TO-1001-F
A1R47	0684-2201	7	5	RESISTOR 22 10% 25W FC TC=-400/+500	01121	CB2201
A1R48	0757-0280	3		RESISTOR 1K 1% 125W F TC=0±100	24546	C4-1/8-TO-1001-F
A1R49	0757-0281	4	4	RESISTOR 2 74K 1% 125W F TC=0±100	24546	C4-1/8-TO-2741-F
A1R50	0757-0416	7		RESISTOR 511 1% 125W F TC=0±100	24546	C4-1/8-TO-511R-F
A1R51	0684-2201	7		RESISTOR 22 10% 25W FC TC=-400/+500	01121	CB2201
A1R52	0757-0280	3		RESISTOR 1K 1% 125W F TC=0±100	24546	C4-1/8-TO-1001-F
A1R53	0757-0281	4		RESISTOR 2 74K 1% 125W F TC=0±100	24546	C4-1/8-TO-2741-F
A1R54	0684-2201	7		RESISTOR 22 10% 25W FC TC=-400/+500	01121	CB2201
A1R55	0684-2201	7		RESISTOR 22 10% 25W FC TC=-400/+500	01121	CB2201
A1R56	0684-2221	1	2	RESISTOR 2 2K 10% 25W FC TC=-400/+700	01121	CB2221
A1R57	0684-1021	7	2	RESISTOR 1K 10% 25W FC TC=-400/+600	01121	CB1021
A1R58	0684-2221	1		RESISTOR 2 2K 10% 25W FC TC=-400/+700	01121	CB2221
A1R59	0684-1021	7		RESISTOR 1K 10% 25W FC TC=-400/+600	01121	CB1021
A1R60	0684-2201	7		RESISTOR 22 10% 25W FC TC=-400/+500	01121	CB2201
A1R61	0698-3150	6	1	RESISTOR 2 37K 1% 125W F TC=0±100	24546	C4-1/8-TO-2371-F
A1R62	0684-5601	7	11	RESISTOR 56 10% 25W FC TC=-400/+500	01121	CB5601
A1R63	0684-5601	7		RESISTOR 56 10% 25W FC TC=-400/+500	01121	CB5601
A1R64	2100-3349	2	1	RESISTOR-TRMR 100 10% C SIDE-ADJ 1-TRN	28480	2100-3349
A1R65	0684-5601	7		RESISTOR 56 10% 25W FC TC=-400/+500	01121	CB5601
A1R66	0684-5621	1		RESISTOR 5 6K 10% 25W FC TC=-400/+700	01121	CB5621
A1R67	0684-5601	7		RESISTOR 56 10% 25W FC TC=-400/+500	01121	CB5601
A1R68	0757-0281	4		RESISTOR 2 74K 1% 125W F TC=0±100	24546	C4-1/8-TO-2741-F
A1R69	0757-0280	3		RESISTOR 1K 1% 125W F TC=0±100	24546	C4-1/8-TO-1001-F
A1R70	0757-0281	4		RESISTOR 2 74K 1% 125W F TC=0±100	24546	C4-1/8-TO-2741-F
A1R71	0684-5621	1	3	RESISTOR 5 6K 10% 25W FC TC=-400/+700	01121	CB5621
A1R72	0684-5601	7		RESISTOR 56 10% 25W FC TC=-400/+500	1121	CB5601
A1R73	0684-5601	7		RESISTOR 56 10% 25W FC TC=-400/+500	1121	CB5601
A1R74	0698-3153	9	2	RESISTOR 3 83K 1% 125W F TC=0±100	24546	C4-1/8-TO-3831-F
A1R75	0698-3153	9		RESISTOR 3 83K 1% 125W F TC=0±100	24546	C4-1/8-TO-3831-F
A1R76	0684-1841	9	1	RESISTOR 180K 10% 25W FC TC=-800/+900	01121	CB1841
A1R77	0684-5601	7		RESISTOR 56 10% 25W FC TC=-400/+500	1121	CB5601
A1R78	0684-1051	3	1	RESISTOR 1M 10% 25W FC TC=-800/+900	01121	CB1051
A1R79	0684-2231	3	1	RESISTOR 22K 10% 25W FC TC=-400/+800	01121	CB2231
A1R80	0684-1531	4		RESISTOR 15K 10% 25W FC TC=-400/+800	01121	CB1531

See introduction to this section for ordering information

Table 6-2. Replaceable Parts (Cont'd)

Reference Designator	HP Part Number	C D	Qty	Description	Mfr Code	Mfr Part Number
A1R81	0684 5601	7		RESISTOR 56 10% 25W FC TC -400/+500	01121	CB5601
A1R82	0757-0284	7	2	RESISTOR 150 1% 125W F TC=0±100	24546	C4-1/8-TO-151-F
A1R83	0757-0469	0	1	RESISTOR 150K 1% 125W F TC=0±100	24546	C4 1/8-TO-1503-F
A1R84	0757-0284	7	2	RESISTOR 150 1% 125W F TC=0+100	24546	C4 1/8-TO-151 F
A1R85	0684-5601	7		RESISTOR 56 10% 25W FC TC- 400/+500	01121	CB5601
A1R86	0757-0407	6	1	RESISTOR 200 1% 125W F TC 0+100	24546	C4-1/8-TO 201-F
A1R87	0757-0280	3		RESISTOR 1K 1% 125W F TC=0±100	24546	C4-1/8-TO-1001-F
A1R88	0698-0084	9		RESISTOR 2 15K 1% 125W F TC 0±100	24546	C4-1/8-TO-2151-F
A1R89	0684-5601	7		RESISTOR 56 10% 25W FC TC= 400 ·500	01121	CB5601
A1R90	0684-5601	7		RESISTOR 56 10% 25W FC TC -400 +500	01121	CB5601
A1R91	0757-0441	8	1	RESISTOR 8 25K 1% 125W F TC 0+100	24546	C4 1 8-TO 8251 F
A1S1	3101-0973	5	1	SWITCH-SL DPDT MINTR 5A 125VAC/DC PC	28480	3101-0973
A1U1	1820-0352	6	1	TRANSISTOR ARRAY	02735	CA3018
A1U2	1858-0040	8	1	TRANSISTOR ARRAY	02735	CA3127A
A1XU1	1200-0607	0	1	SOCKET-IC 16-CONT DIP SLDR	28480	1200-0607
A1VR1	1902 3139	7	1	DIODE-ZNR 8 25V DO-7 PD- 4W TC=+ 053%	28480	1902-3139

See introduction to this section for ordering information

Table 6-2. Replaceable Parts (Cont'd)

Reference Designator	HP Part Number	C D	Qty	Description	Mfr Code	Mfr Part Number
A2	01310-66530	2	1	PC BOARD ASSEMBLY-OUTPUT AMPLIFIER	28480	01310-66530
A2C1	0160-3451	1	8	CAPACITOR-FXD .01μF +80-20% 100VDC CER	28480	0160-3451
A2C2	0160-3451	1		CAPACITOR-FXD .01μF +80-20% 100VDC CER	28480	0160-3451
A2C3	0160 2150	5	2	CAPACITOR-FXD 33PF ±5% 300VDC MICA	28480	0160-2150
A2C4	0160-3451	1		CAPACITOR-FXD .01μF +80-20% 100VDC CER	28480	0160-3451
A2C5	0160-3451	1		CAPACITOR-FXD .01μF +80-20% 100VDC CER	28480	0160-3451
A2C6	0170-0063	6	2	CAPACITOR-FXD .02μF ±10% 400VDC POLYE	84411	663UW20394
A2C7	0160-3451	1		CAPACITOR-FXD .01μF +80-20% 100VDC CER	28480	0160-3451
A2C8	0121-0407	9	2	CAPACITOR-V TRMR PSTN 7-3PF 600V	72982	536-016
A2C9	0170-0022	7	3	CAPACITOR-FXD 1μF ±20% 600VDC POLYE	28480	0170-0022
A2C10				NOT ASSIGNED		
A2C11	0160-2150	5		CAPACITOR-FXD 33PF ±5% 300VDC MICA	28480	0160-2150
A2C12	0121-0407	9		CAPACITOR-V TRMR PSTN 7-3PF 600V	72982	536-016
A2C13	0160-3451	1		CAPACITOR-FXD .01μF +80-20% 100VDC CER	28480	0160-3451
A2C14	0160-3451	1		CAPACITOR-FXD .01μF +80-20% 100VDC CER	28480	0160-3451
A2C15	0170-0063	6		CAPACITOR-FXD .02μF ±10% 400VDC POLYE	84411	663UW20394
A2C16	0160-3451	1		CAPACITOR-FXD .01μF +80-20% 100VDC CER	28480	0160-3451
A2C17	0121-0474	0	1	CAPACITOR-V TRMR PSTN 3-1 5PF 600V	28480	0121-0474
A2C18	0170-0022	7		CAPACITOR-FXD 1μF ±20% 600VDC POLYE	28480	0170-0022
A2C19	0170-0022	7		CAPACITOR-FXD 1μF ±20% 600VDC POLYE	28480	0170-0022
A2C20	0180-0374	3	2	CAPACITOR-FXD 10μF ±10% 20VDC TA	56289	150D106X9020B2
A2C21	0180-0374	3		CAPACITOR-FXD 10μF ±10% 20VDC TA	56289	150D106X9020B2
A2C22	0160-3443	1	2	CAPACITOR-FXD 1μF +80-20% 50VDC CER	28480	0160-3443
A2C23	0160-3443	1		CAPACITOR-FXD 1μF +80-20% 50VDC CER	28480	0160-3443
A2CR1	1901-0033	2	4	DIODE-GEN PRP 180V 200MA DO-7	28480	1901-0033
A2CR2	1901-0033	2		DIODE-GEN PRP 180V 200MA DO-7	28480	1901-0033
A2CR3	1901-0033	2		DIODE-GEN PRP 180V 200MA DO-7	28480	1901-0033
A2CR4	1901-0033	2		DIODE-GEN PRP 180V 200MA DO-7	28480	1901-0033
A2CR5	1901-0040	1	12	DIODE-SWITCHING 30V 50MA 2NS DO-35	28480	1901-0040
A2CR6	1901-0040	1		DIODE-SWITCHING 30V 50MA 2NS DO-35	28480	1901-0040
A2CR7	1901-0040	1		DIODE-SWITCHING 30V 50MA 2NS DO-35	28480	1901-0040
A2CR8	1901-0040	1		DIODE-SWITCHING 30V 50MA 2NS DO-35	28480	1901-0040
A2CR9	1901-0040	1		DIODE-SWITCHING 30V 50MA 2NS DO-35	28480	1901-0040
A2CR10	1901-0040	1		DIODE-SWITCHING 30V 50MA 2NS DO-35	28480	1901-0040
A2CR11	1901-0040	1		DIODE-SWITCHING 30V 50MA 2NS DO-35	28480	1901-0040
A2CR12	1901-0040	1		DIODE-SWITCHING 30V 50MA 2NS DO-35	28480	1901-0040
A2CR13	1901-0040	1		DIODE-SWITCHING 30V 50MA 2NS DO-35	28480	1901-0040
A2CR14	1901-0040	1		DIODE-SWITCHING 30V 50MA 2NS DO-35	28480	1901-0040
A2CR15	1901-0040	1		DIODE-SWITCHING 30V 50MA 2NS DO-35	28480	1901-0040
A2CR16	1901-0040	1		DIODE-SWITCHING 30V 50MA 2NS DO-35	28480	1901-0040
A2Q1	1853-0036	2	4	TRANSISTOR PNP SI PD=310MW FT=250MHZ	28480	1853-0036
A2Q2	1853-0036	2		TRANSISTOR PNP SI PD 310MW FT=250MHZ	28480	1853-0036
A2Q3				NOT ASSIGNED		
A2Q4	1853-0036	2		TRANSISTOR PNP SI PD=310MW FT=250MHZ	28480	1853-0036
A2Q5	1854-0215	1	2	TRANSISTOR NPN SI PD=350MW FT=300MHZ	04713	2N3904
A2Q6	1853-0038	4	4	TRANSISTOR PNP SI TO-39 PD=1W FT=100MHZ	28480	1853-0038
A2Q7	1853-0038	4		TRANSISTOR PNP SI TO-39 PD=1W FT=100MHZ	28480	1853-0038
A2Q8	1854-0271	9	2	TRANSISTOR NPN SI TO-39 PD=1W FT=150MHZ	28480	1854-0271
A2Q9	1854-0523	4	2	TRANSISTOR NPN SI TO-39 PD=1W FT=150MHZ	28480	1854-0523
A2Q10	1854-0215	1		TRANSISTOR NPN SI PD=350MW FT=300MHZ	04713	2N3904
A2Q11	1853-0036	2		TRANSISTOR PNP SI PD=310MW FT=250MHZ	28480	1853-0036
A2Q12	1854-0271	9		TRANSISTOR NPN SI TO-39 PD=1W FT=150MHZ	28480	1854-0271
A2Q13	1854-0523	4		TRANSISTOR NPN SI TO-39 PD=1W FT=150MHZ	28480	1854-0523
A2Q14	1853-0038	4		TRANSISTOR PNP SI TO-39 PD=1W FT=100MHZ	28480	1853-0038
A2Q15	1853-0038	4		TRANSISTOR PNP SI TO-39 PD=1W FT=100MHZ	28480	1853-0038
A2R1	0684-4701	6	4	RESISTOR 47 10% 25W FC TC=-400/+500	01121	CB4701
A2R2	0684-4701	6		RESISTOR 47 10% 25W FC TC=-400/+500	01121	CB4701
A2R3	0684-5601	7	2	RESISTOR 56 10% 25W FC TC= 400/+500	01121	CB5601
A2R4	0684-5601	7		RESISTOR 56 10% 25W FC TC=-400/+500	01121	CB5601
A2R5	0698-3153	9	1	RESISTOR 3 83K 1% 125W F TC=0±100	24546	C4-1/8-TO-3831-F
A2R6	0757-0280	3	1	RESISTOR 1K 1% 125W F TC=0±100	24546	C4-1/8-TO-1001 F
A2R7	0698-0085	0	2	RESISTOR 2 61K 1% 125W F TC=0±100	24546	C4-1/8-TO-2611-F
A2R8	0757-0278	9	2	RESISTOR 1 78K 1% 125W F TC=0±100	24546	C4-1/8-TO-1781-F
A2R9	0698-3159	5	2	RESISTOR 26 1K 1% 125W F TC=0±100	24546	C4-1/8-TO-2612-F
A2R10	0684-1811	3	5	RESISTOR 180 10% 25W FC TC=-400/+600	01121	CB1811
A2R11	0684-2711	4	2	RESISTOR 270 10% 25W FC TC -400/+600	01121	CB2711
A2R12	0698-0085	0		RESISTOR 2 61K 1% 125W F TC=0±100	24546	C4-1/8-TO-2611-F
A2R13	0757-0278	9		RESISTOR 1 78K 1% 125W F TC=0±100	24546	C4-1/8-TO-1781-F
A2R14	0698-3159	5		RESISTOR 26 1K 1% 125W F TC=0±100	24546	C4-1/8-TO-2612-F
A2R15	0684-2711	4		RESISTOR 270 10% 25W FC TC=-400/+600	01121	CB2711
A2R16	0684-1811	3		RESISTOR 180 10% 25W FC TC=-400/+600	01121	CB1811
A2R17	0684-1001	3	2	RESISTOR 10 10% 25W FC TC=-400/+500	01121	CB1001
A2R18	0698-3655	6	2	RESISTOR 56K 5% 2W MO TC=0±200	27167	FP42-2-TOO-5602-J
A2R19	0698-3155	1	2	RESISTOR 4 64K 1% 125W F TC=0±100	24546	C4-1/8-TO-4641-F
A2R20	0757-0159	5	2	RESISTOR 1K 1% 5W F TC=0±100	28480	0757-0159

See introduction to this section for ordering information

Table 6-2. Replaceable Parts (Cont'd)

Reference Designator	HP Part Number	C D	Qty	Description	Mfr Code	Mfr Part Number
A2R21	0764-0021	5	4	RESISTOR 9 1K 5% 2W MO TC=0±200	28480	0764-0021
A2R22	0764-0021	5		RESISTOR 9 1K 5% 2W MO TC=0±200	28480	0764-0021
A2R23	0684-1021	7	2	RESISTOR 1K 10% 25W FC TC=-400/+600	01121	CB1021
A2R24	2100-2692	6	1	RESISTOR-TRMR 1M 20% C SIDE-ADJ 1-TRN	30983	ET50X105
A2R25	0757-0438	3	2	RESISTOR 5 11K 1% 125W F TC=0±100	24546	C4-1/8-TO-5111-F
A2R26	0684-4701	6		RESISTOR 47 10% 25W FC TC=-400/+500	01121	CB4701
A2R27	0761-0076	4	2	RESISTOR 18K 5% 1W MO TC=0+200	28480	0761-0076
A2R28	0761-0074	2	2	RESISTOR 15K 5% 1W MO TC=0±200	28480	0761-0074
A2R29	0698-3646	5	4	RESISTOR 12K 5% 2W MO TC=0±200	27167	FP42-2-TOO-1202-J
A2R30	0698-3646	5		RESISTOR 12K 5% 2W MO TC=0+200	27167	FP42-2-TOO-1202-J
A2R31	0757-0480	5	1	RESISTOR 432K 1% 125W F TC=0±100	19701	MF4C1/8 TO-4323 F
A2R32	0698-3646	5		RESISTOR 12K 5% 2W MO TC=0±200	27167	FP42-2-TOO-1202 J
A2R33	0684-1811	3		RESISTOR 180 10% 25W FC TC=-400/+600	01121	CB1811
A2R34	0698-3646	5		RESISTOR 12K 5% 2W MO TC=0±200	27167	FP42-2-TOO-1202-J
A2R35	0757-0438	3		RESISTOR 5 11K 1% 125W F TC=0±100	24546	C4-1/8-TO-5111-F
A2R36	0684-4701	6		RESISTOR 47 10% 25W FC TC=-400/+500	01121	CB4701
A2R37	0684-1001	3		RESISTOR 10 10% 25W FC TC=-400/+500	01121	CB1001
A2R38	0698-3655	6		RESISTOR 56K 5% 2W MO TC=0±200	27167	FP42-2-TOO-5602-J
A2R39	0684-1811	3		RESISTOR 180 10% 25W FC TC= 400/+600	01121	CB1811
A2R40	0698-3155	1		RESISTOR 4 64K 1% 125W F TC=0±100	24546	C4-1/8-TO-4641 F
A2R41	0757-0159	5		RESISTOR 1K 1% 5W F TC=0+100	28480	0757-0159
A2R42	0761-0074	2		RESISTOR 15K 5% 1W MO TC=0+200	28480	0761-0074
A2R43	0761-0076	4		RESISTOR 18K 5% 1W MO TC=0+200	28480	0761-0076
A2R44	0764-0021	5		RESISTOR 9 1K 5% 2W MO TC=0±200	28480	0764-0021
A2R45	0764-0021	5		RESISTOR 9 1K 5% 2W MO TC=0±200	28480	0764-0021
A2R46	0684-1021	7		RESISTOR 1K 10% 25W FC TC= 400/+600	01121	CB1021
A2R47	0684-1811	3		RESISTOR 180 10% 25W FC TC=-400/+600	01121	CB1811
				MISCELLANEOUS PARTS		
	1200-0185	9	8	INSULATOR-XSTR NYLON	28480	1200-0185
	1205-0073	4	8	HEAT SINK TO-5/TO-39-CS	28480	1205-0073

See introduction to this section for ordering information

Table 6-2. Replaceable Parts (Cont'd)

Reference Designator	HP Part Number	C D	Qty	Description	Mfr Code	Mfr Part Number
A3	01317-66503	6	1	PC BOARD ASSEMBLY-INPUT AMPLIFIER	28480	01317-66503
A3C1	0160-3451	1	5	CAPACITOR-FXD 01μF +80-20% 100VDC CER	28480	0160-3451
A3C2	0160-3451	1		CAPACITOR-FXD 01μF +80-20% 100VDC CER	28480	0160-3451
A3C3	0160-3451	1		CAPACITOR-FXD 01μF +80-20% 100VDC CER	28480	0160-3451
A3C4	0160-0174	9	2	CAPACITOR-FXD 47μF +80-20%25VDC CER	28480	0160-0174
A3C5	0160-3443	1	7	CAPACITOR-FXD 1μF +80-20% 50VDC CER	28480	0160-3443
A3C6	0160-3451	1		CAPACITOR-FXD 01μF +80-20% 100VDC CER	28480	0160-3451
A3C7	0160-3443	1		CAPACITOR-FXD 1μF +80-20% 50VDC CER	28480	0160-3443
A3C8	0160-2197	0	2	CAPACITOR-FXD 10PF ±5% 300VDC MICA	28480	0160-2197
A3C9	0160-2197	0		CAPACITOR-FXD 10PF ±5% 300VDC MICA	28480	0160-2197
A3C10	0160-0168	1	7	CAPACITOR-FXD 1μF ±10% 200VDC POLYE	28480	0160-0168
A3C11	0160-3443	1		CAPACITOR-FXD 1μF +80-20% 50VDC CER	28480	0160-3443
A3C12	0160-3443	1		CAPACITOR-FXD 1μF +80-20% 50VDC CER	28480	0160-3443
A3C13	0160-0168	1		CAPACITOR-FXD 1μF ±10% 200VDC POLYE	28480	0160-0168
A3C14	0160-0168	1		CAPACITOR-FXD 1μF ±10% 200VDC POLYE	28480	0160-0168
A3C15	0160-0168	1		CAPACITOR-FXD 1μF ±10% 200VDC POLYE	28480	0160-0168
A3C16	0160-3451	1		CAPACITOR-FXD 01μF +80-20% 100VDC CER	28480	0160-3451
A3C17	0160-0168	1		CAPACITOR-FXD 1μF ±10% 200VDC POLYE	28480	0160-0168
A3C18	0160-0168	1		CAPACITOR-FXD 1μF ±10% 200VDC POLYE	28480	0160-0168
A3C19	0160-0174	9		CAPACITOR-FXD 47μF +80-20%25VDC CER	28480	0160-0174
A3C20	0140-0196	3	1	CAPACITOR-FXD 150PF ±5% 300VDC MICA	72136	DM15F151J0300WV1CR
A3C21	0160-0168	1		CAPACITOR-FXD 1μF ±10% 200VDC POLYE	28480	0160-0168
A3C22	0160-2254	0	1	CAPACITOR-FXD 7 5PF ± 25PF 500VDC CER	28480	0160-2254
A3C23	0160-3443	1		CAPACITOR-FXD 1μF +80-20% 50VDC CER	28480	0160-3443
A3C24	0160-3443	1		CAPACITOR-FXD 1μF +80-20% 50VDC CER	28480	0160-3443
A3C25	0160-3443	1		CAPACITOR-FXD 1μF +80-20% 50VDC CER	28480	0160-3443
A3CR1	1901-0376	6	4	DIODE-GEN PRP 35V 50MA DO-35	28480	1901-0376
A3CR2	1901-0376	6		DIODE-GEN PRP 35V 50MA DO-35	28480	1901-0376
A3CR3	1901-0376	6		DIODE-GEN PRP 35V 50MA DO-35	28480	1901-0376
A3CR4	1901-0376	6		DIODE-GEN PRP 35V 50MA DO-35	28480	1901-0376
A3CR5	1901-0033	2	8	DIODE-GEN PRP 180V 200MA DO-7	28480	1901-0033
A3CR6	1901-0033	2		DIODE-GEN PRP 180V 200MA DO-7	28480	1901-0033
A3CR7	1901-0033	2		DIODE-GEN PRP 180V 200MA DO-7	28480	1901-0033
A3CR8	1901-0033	2		DIODE-GEN PRP 180V 200MA DO-7	28480	1901-0033
A3CR9	1901-0040	1	7	DIODE-SWITCHING 30V 50MA 2NS DO-35	28480	1901-0040
A3CR10	1901-0040	1		DIODE-SWITCHING 30V 50MA 2NS DO-35	28480	1901-0040
A3CR11	1901-0040	1		DIODE-SWITCHING 30V 50MA 2NS DO-35	28480	1901-0040
A3CR12	1901-0040	1		DIODE-SWITCHING 30V 50MA 2NS DO-35	28480	1901-0040
A3CR13	1901-0033	2		DIODE-GEN PRP 180V 200MA DO-7	28480	1901-0033
A3CR14	1901-0033	2		DIODE-GEN PRP 180V 200MA DO-7	28480	1901-0033
A3CR15	1901-0033	2		DIODE-GEN PRP 180V 200MA DO-7	28480	1901-0033
A3CR16	1901-0033	2		DIODE-GEN PRP 180V 200MA DO-7	28480	1901-0033
A3CR17	1901-0040	1		DIODE-SWITCHING 30V 50MA 2NS DO-35	28480	1901-0040
A3CR18	1901-0040	1		DIODE-SWITCHING 30V 50MA 2NS DO-35	28480	1901-0040
A3CR19				NOT ASSIGNED		
A3CR20	1901-0513	3	2	DIODE-DUAL 100V	28480	1901-0513
A3CR21	1901-0513	3		DIODE-DUAL 100V	28480	1901-0513
A3CR22				NOT ASSIGNED		
A3CR23				NOT ASSIGNED		
A3CR24	1901-0040	1		DIODE-SWITCHING 30V 50MA 2NS DO-35	28480	1901-0040
A3L1	9100-2276	9	2	COIL-MLD 100μM 10% Q=50 095DX 25LG-NOM	28480	9100-2276
A3L2	9100-2276	9		COIL-MLD 100μM 10% Q=50 095DX 25LG-NOM	28480	9100-2276
A3Q1	1855-0262	0	1	TRANSISTOR-JFET DUAL N-CHAN D-MODE SI	28480	1855-0262
A3Q2				NOT ASSIGNED		
A3Q3	1853-0036	2	4	TRANSISTOR PNP SI PD=310MW FT=250MHZ	28480	1853-0036
A3Q4	1853-0036	2		TRANSISTOR PNP SI PD=310MW FT=250MHZ	28480	1853-0036
A3Q5	1854-0071	7	7	TRANSISTOR NPN SI PD=300MW FT=200 MHZ	28480	1854-0071
A3Q6	1854-0071	7		TRANSISTOR NPN SI PD=300MW FT=200 MHZ	28480	1854-0071
A3Q7	1854-0071	7		TRANSISTOR NPN SI PD=300MW FT=200 MHZ	28480	1854-0071
A3Q8	1853-0316	1	1	TRANSISTOR-DUAL PNP PD=500MW	28480	1853-0316
A3Q9	1854-0071	7		TRANSISTOR NPN SI PD=300MW FT=200 MHZ	28480	1854-0071
A3Q10	1854-0071	7		TRANSISTOR NPN SI PD=300MW FT=200 MHZ	28480	1854-0071
A3Q11	1853-0276	2	3	TRANSISTOR PNP SI TO-52 PD=360MW	04713	MM3906
A3Q12	1853-0276	2		TRANSISTOR PNP SI TO-52 PD=360MW	04713	MM3906
A3Q13	1853-0276	2		TRANSISTOR PNP SI TO-52 PD=360MW	04713	MM3906
A3Q14	1853-0036	2		TRANSISTOR PNP SI PD=310MW FT=250MHZ	28480	1853-0036
A3Q15	1853-0036	2		TRANSISTOR PNP SI PD=310MW FT=250MHZ	28480	1853-0036
A3Q16	1854-0071	7		TRANSISTOR NPN SI PD=300MW FT=200 MHZ	28480	1854-0071
A3Q17	1854-0071	7		TRANSISTOR NPN SI PD=300MW FT=200 MHZ	28480	1854-0071
A3R1	0698-5965	5	1	RESISTOR 50 1% 5W F TC=0±100	28480	0698-5965
A3R2	0687-4701	2	1	RESISTOR 47 10% 5W CC TC=0+412	01121	EB4701
A3R3	0757-0340	6	1	RESISTOR 10K 1% 25W F TC=0±100	24546	C5-1/4-TO-1002-F
A3R4	0684-1041	1	2	RESISTOR 100K 10% 25W FC TC=-400/+800	01121	CB1041
A3R5	0684-1041	1		RESISTOR 100K 10% 25W FC TC=-400/+800	01121	CB1041

See introduction to this section for ordering information

Table 6-2. Replaceable Parts (Cont'd)

Reference Designator	HP Part Number	C D	Qty	Description	Mfr Code	Mfr Part Number
A3R6	0684-3901	6	2	RESISTOR 39 10% 25W FC TC=-400/+500	01121	CB3901
A3R7	0684-3901	6		RESISTOR 39 10% 25W FC TC=-400/+500	01121	CB3901
A3R8				NOT ASSIGNED		
A3R9				NOT ASSIGNED		
A3R10	0757-0280	3	7	RESISTOR 1K 1% 125W F TC=0±100	24546	C4-1/8-TO-1001-F
A3R11	2100 3352	7	2	RESISTOR-TRMR 1K 10% C SIDE-ADJ 1-TRN	28480	2100-3352
A3R12	2100-3352	7		RESISTOR-TRMR 1K 10% C SIDE-ADJ 1-TRN	28480	2100-3352
A3R13	0698 3447	4	1	RESISTOR 422 1% 125W F TC=0±100	24546	C4-1/8-TO-422R-F
A3R14	0757-0283	6	1	RESISTOR 2K 1% 125W F TC=0+100	24546	C4-1/8-TO-2001-F
A3R15	0757 0419	0	1	RESISTOR 681 1% 125W F TC=0±100	24546	C4-1/8-TO-681R-F
A3R16	0757 0412	3	2	RESISTOR 365 1% 125W F TC=0±100	24546	C4-1/8-TO-365R-F
A3R17				NOT ASSIGNED		
A3R18				NOT ASSIGNED		
A3R19	0757 0442	9	4	RESISTOR 10K 1% 125W F TC=0+100	24546	C4-1/8-TO-1002 F
A3R20				NOT ASSIGNED		
A3R21				NOT ASSIGNED		
A3R22	0757-0442	9		RESISTOR 10K 1% 125W F TC=0±100	24546	C4-1/8-TO-1002-F
A3R23	0757-0280	3		RESISTOR 1K 1% 125W F TC=0±100	24546	C4-1/8-TO-1001-F
A3R24	0757-0417	8	2	RESISTOR 562 1% 125W F TC 0±100	24546	C4-1/8-TO-562R-F
A3R25	0757-0417	8		RESISTOR 562 1% 125W F TC=0+100	24546	C4-1/8-TO-562R-F
A3R26	0757-0394	0	2	RESISTOR 51 1 1% 125W F TC=0±100	24546	C4-1/8-TO-51R1-F
A3R27	0757-0401	0	2	RESISTOR 100 1% 125W F TC=0±100	24546	C4-1/8-TO-101-F
A3R28	0757 0442	9		RESISTOR 10K 1% 125W F TC 0+100	24546	C4-1/8-TO-1002-F
A3R29	0757-0401	0		RESISTOR 100 1% 125W F TC=0±100	24546	C4-1/8-TO-101-F
A3R30				NOT ASSIGNED		
A3R31	0757-0394	0		RESISTOR 51 1 1% 125W F TC=0+100	24546	C4-1/8-TO-51R1-F
A3R32	0698-0084	9	2	RESISTOR 2 15K 1% 125W F TC 0±100	24546	C4-1/8-TO-2151-F
A3R33	0757-0408	7	2	RESISTOR 243 1% 125W F TC=0±100	24546	C4-1/8-TO-243R-F
A3R34	0757 0273	4	1	RESISTOR 3 01K 1% 125W F TC 0±100	24546	C4-1/8-TO-3011-F
A3R35	0757-0408	7		RESISTOR 243 1% 125W F TC=0+100	24546	C4-1/8-TO-243R-F
A3R36	0757-0416	7	3	RESISTOR 511 1% 125W F TC=0±100	24546	C4-1/8-TO-511R-F
A3R37	0757-0416	7		RESISTOR 511 1% 125W F TC=0±100	24546	C4-1/8-TO-511R-F
A3R38	0757-0412	3		RESISTOR 365 1% 125W F TC=0+100	24546	C4-1/8-TO-365R-F
A3R39	0684-5621	1	3	RESISTOR 5 6K 10% 25W FC TC=-400/+700	01121	CB5621
A3R40	0684-1531	4	2	RESISTOR 15K 10% 25W FC TC -400/+800	01121	CB1531
A3R41	0757-0442	9		RESISTOR 10K 1% 125W F TC=0±100	24546	C4-1/8-TO-1002-F
A3R42	0757-0415	6	2	RESISTOR 475 1% 125W F TC 0±100	24546	C4-1/8-TO-475R-F
A3R43	0757 0415	6		RESISTOR 475 1% 125W F TC=0+100	24546	C4-1/8-TO-475R-F
A3R44	0698 0085	0	1	RESISTOR 2 61K 1% 125W F TC=0+100	24546	C4-1/8-TO-2611-F
A3R45	0757-0421	4	1	RESISTOR 825 1% 125W F TC=0±100	24546	C4-1/8-TO-825R F
A3R46	0757-0280	3		RESISTOR 1K 1% 125W F TC=0±100	24546	C4-1/8-TO-1001-F
A3R47	0684-2201	7	5	RESISTOR 22 10% 25W FC TC=-400/+500	01121	CB2201
A3R48	0757-0280	3		RESISTOR 1K 1% 125W F TC 0+100	24546	C4-1/8-TO-1001-F
A3R49	0757-0281	4	4	RESISTOR 2 74K 1% 125W F TC=0±100	24546	C4-1/8-TO-2741-F
A3R50	0757-0416	7		RESISTOR 511 1% 125W F TC=0+100	24546	C4-1/8-TO-511R-F
A3R51	0684-2201	7		RESISTOR 22 10% 25W FC TC -400/+500	01121	CB2201
A3R52	0757-0280	3		RESISTOR 1K 1% 125W F TC 0+100	24546	C4-1/8-TO-1001-F
A3R53	0757-0281	4		RESISTOR 2 74K 1% 125W F TC=0±100	24546	C4-1/8-TO-2741-F
A3R54	0684-2201	7		RESISTOR 22 10% 25W FC TC=-400/+500	01121	CB2201
A3R55	0684-2201	7		RESISTOR 22 10% 25W FC TC=-400/+500	01121	CB2201
A3R56	0684-2221	1	2	RESISTOR 2 2K 10% 25W FC TC=-400/+700	01121	CB2221
A3R57	0684-1021	7	2	RESISTOR 1K 10% 25W FC TC=-400/+600	01121	CB1021
A3R58	0684-2221	1		RESISTOR 2 2K 10% 25W FC TC=-400/+700	01121	CB2221
A3R59	0684-1021	7		RESISTOR 1K 10% 25W FC TC= 400/+600	01121	CB1021
A3R60	0684-2201	7		RESISTOR 22 10% 25W FC TC=-400/+500	01121	CB2201
A3R61	0698-3150	6	1	RESISTOR 2 37K 1% 125W F TC=0±100	24546	C4-1/8-TO-2371-F
A3R62	0684-5601	7	1	RESISTOR 56 10% 25W FC TC -400/+500	01121	CB5601
A3R63	0684-5601	7		RESISTOR 56 10% 25W FC TC= 400/+500	01121	CB5601
A3R64	2100-3349	2	1	RESISTOR-TRMR 100 10% C SIDE-ADJ 1-TRN	28480	2100-3349
A3R65	0684-5601	7		RESISTOR 56 10% 25W FC TC=-400/+500	01121	CB5601
A3R66	0684-5621	1		RESISTOR 5 6K 10% 25W FC TC=-400/+700	01121	CB5621
A3R67	0684-5601	7		RESISTOR 56 10% 25W FC TC=-400/+500	01121	CB5601
A3R68	0757-0281	4		RESISTOR 2 74K 1% 125W F TC=0±100	24546	C4-1/8-TO-2741-F
A3R69	0757-0280	3		RESISTOR 1K 1% 125W F TC=0+100	24546	C4-1/8-TO-1001-F
A3R70	0757-0281	4		RESISTOR 2 74K 1% 125W F TC=0±100	24546	C4-1/8-TO-2741-F
A3R71	0684-5621	1		RESISTOR 5 6K 10% 25W FC TC=-400/+700	01121	CB5621
A3R72	0684-5601	7		RESISTOR 56 10% 25W FC TC= 400/+500	01121	CB5601
A3R73	0684-5601	7		RESISTOR 56 10% 25W FC TC=-400/+500	01121	CB5601
A3R74	0698-3153	9	2	RESISTOR 3 83K 1% 125W F TC 0+100	24546	C4-1/8-TO-3831-F
A3R75	0698-3153	9		RESISTOR 3 83K 1% 125W F TC=0±100	24546	C4-1/8-TO-3831-F
A3R76	0684-1841	9	1	RESISTOR 180K 10% 25W FC TC= 800/+900	01121	CB1841
A3R77	0684-5601	7		RESISTOR 56 10% 25W FC TC=-400/+500	01121	CB5601
A3R78	0684-1051	3	1	RESISTOR 1M 10% 25W FC TC=-800/+900	01121	CB1051
A3R79	0684-2231	3	1	RESISTOR 22K 10% 25W FC TC=-400/+800	01121	CB2231
A3R80	0684-1531	4		RESISTOR 15K 10% 25W FC TC=-400/+800	01121	CB1531

See introduction to this section for ordering information

Table 6-2. Replaceable Parts (Cont'd)

Reference Designator	HP Part Number	C D	Qty	Description	Mfr Code	Mfr Part Number
A3R81	0684-5601	7		RESISTOR 56 10% 25W FC TC=-400/+500	01121	CB5601
A3R82	0757-0284	7	2	RESISTOR 150 1% 125W F TC=0±100	24546	C4-1/8-TO-151-F
A3R83	0757-0469	0	1	RESISTOR 150K 1% 125W F TC=0±100	24546	C4-1/8-TO-1503-F
A3R84	0757-0284	7		RESISTOR 150 1% 125W F TC=0±100	24546	C4-1/8-TO-151-F
A3R85	0684-5601	7		RESISTOR 56 10% 25W FC TC=-400/+500	01121	CB5601
A3R86	0757-0407	6	1	RESISTOR 200 1% 125W F TC=0±100	24546	C4-1/8-TO-201-F
A3R87	0757-0280	3		RESISTOR 1K 1% 125W F TC=0±100	24546	C4-1/8-TO-1001-F
A3R88	0698-0084	9		RESISTOR 2 15K 1% 125W F TC=0±100	24546	C4-1/8-TO-2151-F
A3R89	0684-5601	7		RESISTOR 56 10% 25W FC TC=-400/+500	01121	CB5601
A3R90	0684-5601	7		RESISTOR 56 10% 25W FC TC=-400/+500	01121	CB5601
A3R91	0757-0441	8	1	RESISTOR 8 25K 1% 125W F TC=0±100	24546	C4-1/8-TO-8251-F
A3S1	3101-0973	5	1	SWITCH-SL DPDT MINTR 5A 125VAC/DC PC	28480	3101-0973
A3U1	1820-0352	6	1	TRANSISTOR ARRAY	02735	CA3018
A3U2	1858 0040	8	1	TRANSISTOR ARRAY	02735	CA3127E
A3XU1	1200-0607	0	1	SOCKET-IC 16-CONT DIP DIP-SLDR	28480	1200-0607
A3VR1	1902-3139	7	1	DIODE-ZNR 8 25V 5% DO-7 PD= 4W TC=+ 053%	28480	1902-3139

See introduction to this section for ordering information

Table 6-2. Replaceable Parts (Cont'd)

Reference Designator	HP Part Number	C D	Qty	Description	Mfr Code	Mfr Part Number
A4	01310-66530	2	1	PC BOARD ASSEMBLY-OUTPUT AMPLIFIER	28480	01310-66530
A4C1	0160-3451	1	8	CAPACITOR-FXD 01μF +80 20% 100VDC CER	28480	0160-3451
A4C2	0160-3451	1		CAPACITOR-FXD 01μF +80-20% 100VDC CER	28480	0160-3451
A4C3	0160-2150	5	2	CAPACITOR-FXD 33PF +5% 300VDC MICA	28480	0160-2150
A4C4	0160-3451	1		CAPACITOR-FXD 01μF +80-20% 100VDC CER	28480	0160 3451
A4C5	0160-3451	1		CAPACITOR-FXD 01μF +80-20% 100VDC CER	28480	0160-3451
A4C6	0170-0063	6	2	CAPACITOR-FXD 02μF +10% 400VDC POLYE	84411	663UW20394
A4C7	0160-3451	1		CAPACITOR-FXD 01μF +80-20% 100VDC CER	28480	0160-3451
A4C8	0121-0407	9	2	CAPACITOR-V TRMR-PSTN 7-3PF 600V	72982	536-016
A4C9	0170-0022	7	3	CAPACITOR-FXD 1μF ±20% 600VDC POLYE	28480	0170-0022
A4C10				NOT ASSIGNED		
A4C11	0160-2150	5		CAPACITOR-FXD 33PF +5% 300VDC MICA	28480	0160-2150
A4C12	0121-0407	9		CAPACITOR-V TRMR-PSTN 7-3PF 600V	72982	536-016
A4C13	0160-3451	1		CAPACITOR-FXD 01μF +80-20% 100VDC CER	28480	0160-3451
A4C14	0160-3451	1		CAPACITOR-FXD 01μF +80-20% 100VDC CER	28480	0160-3451
A4C15	0170-0063	6		CAPACITOR FXD 02μF ±10% 400VDC POLYE	84411	663UW20394
A4C16	0160-3451	1		CAPACITOR FXD 01μF +80-20% 100VDC CER	28480	0160-3451
A4C17	0121-0474	0	1	CAPACITOR-V TRMR-PSTN 0 25-1 5PF 600V	28480	0121-0474
A4C18	0170-0022	7		CAPACITOR-FXD 1μF ±20% 600VDC POLYE	28480	0170-0022
A4C19	0170-0022	7		CAPACITOR-FXD 1μF +20% 600VDC POLYE	28480	0170-0022
A4C20	0180-0374	3	2	CAPACITOR-FXD 10μF ±10% 20VDC TA	56289	150D106X9020B2
A4C21	0180-0374	3		CAPACITOR-FXD 10μF ±10% 20VDC TA	56289	150D106X9020B2
A4C22	0160-3443	1	2	CAPACITOR-FXD 1μF +80-20% 50VDC CER	28480	0160-3443
A4C23	0160-3443	1		CAPACITOR-FXD 1μF +80-20% 50VDC CER	28480	0160-3443
A4CR1	1901-0033	2	4	DIODE-GEN PRP 180V 200MA DO-7	28480	1901-0033
A4CR2	1901-0033	2		DIODE-GEN PRP 180V 200MA DO-7	28480	1901-0033
A4CR3	1901-0033	2		DIODE-GEN PRP 180V 200MA DO-7	28480	1901-0033
A4CR4	1901-0033	2		DIODE-GEN PRP 180V 200MA DO-7	28480	1901-0033
A4CR5	1901-0040	1	12	DIODE-SWITCHING 30V 50MA 2NS DO-35	28480	1901-0040
A4CR6	1901-0040	1		DIODE-SWITCHING 30V 50MA 2NS DO-35	28480	1901-0040
A4CR7	1901-0040	1		DIODE-SWITCHING 30V 50MA 2NS DO-35	28480	1901-0040
A4CR8	1901-0040	1		DIODE-SWITCHING 30V 50MA 2NS DO-35	28480	1901-0040
A4CR9	1901-0040	1		DIODE-SWITCHING 30V 50MA 2NS DO-35	28480	1901-0040
A4CR10	1901-0040	1		DIODE-SWITCHING 30V 50MA 2NS DO-35	28480	1901-0040
A4CR11	1901-0040	1		DIODE-SWITCHING 30V 50MA 2NS DO-35	28480	1901-0040
A4CR12	1901-0040	1		DIODE-SWITCHING 30V 50MA 2NS DO-35	28480	1901-0040
A4CR13	1901-0040	1		DIODE-SWITCHING 30V 50MA 2NS DO-35	28480	1901-0040
A4CR14	1901-0040	1		DIODE-SWITCHING 30V 50MA 2NS DO-35	28480	1901-0040
A4CR15	1901-0040	1		DIODE-SWITCHING 30V 50MA 2NS DO-35	28480	1901-0040
A4CR16	1901-0040	1		DIODE-SWITCHING 30V 50MA 2NS DO-35	28480	1901-0040
A4Q1	1853-0036	2	4	TRANSISTOR PNP SI PD=310MW FT=250MHZ	28480	1853-0036
A4Q2	1853-0036	2		TRANSISTOR PNP SI PD=310MW FT=250MHZ	28480	1853-0036
A4Q3				NOT ASSIGNED		
A4Q4	1853-0036	2		TRANSISTOR PNP SI PD=310MW FT=250MHZ	28480	1853-0036
A4Q5	1854-0215	1	2	TRANSISTOR NPN SI PD=350MW FT=300MHZ	04713	2N3904
A4Q6	1853-0038	4	4	TRANSISTOR PNP SI TO-39 PD=1W FT=100MHZ	28480	1853-0038
A4Q7	1853-0038	4		TRANSISTOR PNP SI TO-39 PD=1W FT=100MHZ	28480	1853-0038
A4Q8	1854-0271	9	2	TRANSISTOR NPN SI TO-39 PD 1W FT=150MHZ	28480	1854-0271
A4Q9	1854-0523	4	2	TRANSISTOR NPN SI TO-39 PD=1W FT=150MHZ	28480	1854-0523
A4Q10	1854-0215	1		TRANSISTOR NPN SI PD 350MW FT=300MHZ	04713	2N3904
A4Q11	1853-0036	2		TRANSISTOR PNP SI PD=310MW FT=250MHZ	28480	1853-0036
A4Q12	1854-0271	9		TRANSISTOR NPN SI TO-39 PD=1W FT=150MHZ	28480	1854-0271
A4Q13	1854-0523	4		TRANSISTOR NPN SI TO-39 PD=1W FT=150MHZ	28480	1854-0523
A4Q14	1853-0038	4		TRANSISTOR PNP SI TO-39 PD=1W FT=100MHZ	28480	1853-0038
A4Q15	1853-0038	4		TRANSISTOR PNP SI TO-39 PD=1W FT=100MHZ	28480	1853-0038
A4R1	0684-4701	6	4	RESISTOR 47 10% 25W FC TC=-400/+500	01121	CB4701
A4R2	0684-4701	6		RESISTOR 47 10% 25W FC TC=-400/+500	01121	CB4701
A4R3	0684-5601	7	2	RESISTOR 56 10% 25W FC TC= 400/+500	01121	CB5601
A4R4	0684-5601	7		RESISTOR 56 10% 25W FC TC= 400/+500	01121	CB5601
A4R5	0698-3153	9	1	RESISTOR 3 83K 1% 125W F TC=0±100	24546	C4-1/8-TO-3831-F
A4R6	0757-0280	3	1	RESISTOR 1K 1% 125W F TC=0±100	24546	C4-1/8-TO-1001-F
A4R7	0698-0085	0	2	RESISTOR 2 61K 1% 125W F TC=0±100	24546	C4-1/8-TO-2611-F
A4R8	0757-0278	9	2	RESISTOR 1 78K 1% 125W F TC=0±100	24546	C4-1/8-TO-1781-F
A4R9	0698-3159	5	2	RESISTOR 26 1K 1% 125W F TC=0±100	24546	C4-1/8-TO-2612-F
A4R10	0684-1811	3	5	RESISTOR 180 10% 25W FC TC=-400/+600	01121	CB1811
A4R11	0684-2711	4	2	RESISTOR 270 10% 25W FC TC= 400/+600	01121	CB2711
A4R12	0698-0085	0		RESISTOR 2 61K 1% 125W F TC=0±100	24546	C4-1/8-TO-2611-F
A4R13	0757-0278	9		RESISTOR 1 78K 1% 125W F TC=0±100	24546	C4-1/8-TO-1781-F
A4R14	0698-3159	5		RESISTOR 26 1K 1% 125W F TC=0±100	24546	C4-1/8-TO-2612-F
A4R15	0684-2711	4		RESISTOR 270 10% 25W FC TC=-400/+600	01121	CB2711
A4R16	0684-1811	3		RESISTOR 180 10% 25W FC TC=-400/+600	01121	CB1811
A4R17	0684-1001	3	2	RESISTOR 10 10% 25W FC TC=-400/+500	01121	CB1001
A4R18	0698-3655	6	2	RESISTOR 56K 5% 2W MO TC=0±200	27167	FP42-2-TOO-5602-J
A4R19	0698-3155	1	2	RESISTOR 4 64K 1% 125W F TC=0±100	24546	C4-1/8-TO-4641-F
A4R20	0757-0159	5	2	RESISTOR 1K 1% 5W F TC=0±100	28480	0757-0159

Table 6-2. Replaceable Parts (Cont'd)

Reference Designator	HP Part Number	C D	Qty	Description	Mfr Code	Mfr Part Number
A4R21	0764-0021	5	4	RESISTOR 9 1K 5% 2W MO TC=0+200	28480	0764-0021
A4R22	0764-0021	5		RESISTOR 9 1K 5% 2W MO TC=0±200	28480	0764-0021
A4R23	0684-1021	7	2	RESISTOR 1K 10% 25W FC TC= 400/+600	01121	CB1021
A4R24	2100-2692	6	1	RESISTOR-TRMR 1M 20% C SIDE-ADJ 1-TRN	30983	ET50X105
A4R25	0757-0438	3	2	RESISTOR 5 11K 1% 125W F TC-0±100	24546	C4 1/8-TO-5111-F
A4R26	0684-4701	6		RESISTOR 47 10% 25W FC TC=-400/+500	01121	CB4701
A4R27	0761-0076	4	2	RESISTOR 18K 5% 1W MO TC=0±200	28480	0761-0076
A4R28	0761-0074	2	2	RESISTOR 15K 5% 1W MO TC=0+200	28480	0761-0074
A4R29	0698-3646	5	4	RESISTOR 12K 5% 2W MO TC=0±200	27167	FP42-2-TOO-1202-J
A4R30	0698-3646	5		RESISTOR 12K 5% 2W MO TC=0±200	27167	FP42-2-TOO 1202-J
A4R31	0757-0480	5	1	RESISTOR 432K 1% 125W F TC=0±100	19701	MF4C1/8-TO-4323-F
A4R32	0698-3646	5		RESISTOR 12K 5% 2W MO TC=0±200	27167	FP42-2-TOO-1202-J
A4R33	0684-1811	3		RESISTOR 180 10% 25W FC TC= 400/+600	01121	CB1811
A4R34	0698-3646	5		RESISTOR 12K 5% 2W MO TC=0±200	27167	FP42-2-TOO 1202-J
A4R35	0757-0438	3		RESISTOR 5 11K 1% 125W F TC 0+100	24546	C4-1/8-TO-5111 F
A4R36	0684-4701	6		RESISTOR 47 10% 25W FC TC= 400/+500	01121	CB4701
A4R37	0684-1001	3		RESISTOR 10 10% 25W FC TC= 400/+500	01121	CB1001
A4R38	0698-3655	6		RESISTOR 56K 5% 2W MO TC=0±200	27167	FP42-2 TOO-5602-J
A4R39	0684-1811	3		RESISTOR 180 10% 25W FC TC=-400/+600	01121	CB1811
A4R40	0698-3155	1		RESISTOR 4 64K 1% 125W F TC=0±100	24546	C4 1/8-TO-4641-F
A4R41	0757-0159	5		RESISTOR 1K 1% 5W F TC-0±100	28480	0757-0159
A4R42	0761-0074	2		RESISTOR 15K 5% 1W MO TC=0+200	28480	0761-0074
A4R43	0761-0076	4		RESISTOR 18K 5% 1W MO TC=0±200	28480	0761-0076
A4R44	0764-0021	5		RESISTOR 9 1K 5% 2W MO TC=0±200	28480	0764-0021
A4R45	0764-0021	5		RESISTOR 9 1K 5% 2W MO TC=0+200	28480	0764-0021
A4R46	0684-1021	7		RESISTOR 1K 10% 25W FC TC=-400/+600	01121	CB1021
A4R47	0684-1811	3		RESISTOR 180 10% 25W FC TC=-400/+600	01121	CB1811
				MISCELLANEOUS PARTS		
	1200-0185	9	8	INSULATOR-XSTR NYLON	28480	1200-0185
	1205-0073	4	8	HEAT SINK TO-5/TO-39-CS	28480	1205-0073

Table 6-2. Replaceable Parts (Cont'd)

Reference Designator	HP Part Number	C D	Qty	Description	Mfr Code	Mfr Part Number
A5	01311-66507	4	1	Z-AXIS BOARD ASSEMBLY	28480	01311-66505
A5C1	0160-2055	9	4	CAPACITOR-FXD 01UF +80-20% 100VDC CER	28480	0160-2055
A5C2	0160-2055	9		CAPACITOR-FXD 01UF +80-20% 100VDC CER	28480	0160-2055
A5C3	0160-3443	1	9	CAPACITOR-FXD 1UF +80-20% 50VDC CER	28480	0160-3443
A5C4	0160-2055	9		CAPACITOR-FXD 01UF +80-20% 100VDC CER	28480	0160-2055
A5C5	0140-0193	0	1	CAPACITOR-FXD 82PF +5% 200VDC MICA	28480	0140-0193
A5C6	0121-0474	0	1	CAPACITOR-VAR 3-1 5PF 600VDC	28480	0121-0474
A5C7	0160-3453	6	2	CAPACITOR-FXD 05UF +80 20% 100VDC CER	28480	0160-3453
A5C8	0160-3453	6		CAPACITOR-FXD 05UF +80 20% 100VDC CER	28480	0160-3453
A5C9	0160-4908	5	3	CAPACITOR FXD 68UF +10% 250VDC	28480	0160-4908
A5C10	0160-4908	5		CAPACITOR-FXD 68UF +10% 250VDC	28480	0160-4908
A5C11	0160-4908	5		CAPACITOR-FXD 68UF ±10% 250VDC	28480	0160-4908
A5C12	0160-3960	7	1	CAPACITOR-FXD 1000PF +20% 8KVDC	28480	0160-3960
A5C13	0160-2055	9		CAPACITOR-FXD 01UF +80 20% 100VDC CER	28480	0160-2055
A5C14	0160-3443	1		CAPACITOR-FXD 1UF +80-20% 50VDC CER	28480	0160-3443
A5C15	0180-0374	3	2	CAPACITOR-FXD 10UF +10% 20VDC TA	56289	150D106X9020B2
A5C16	0180-0374	3		CAPACITOR-FXD 10UF ±10% 20VDC TA	56289	150D106X9020B2
A5C17	0160-3443	1		CAPACITOR-FXD 1UF +80-20% 50VDC CER	28480	0160-3443
A5C18	0160-3443	1		CAPACITOR-FXD 1UF +80-20% 50VDC CER	28480	0160 3443
A5C19	0160-3508	9	2	CAPACITOR-FXD 1UF +80-20% 50VDC CER	28480	0160-3508
A5C20	0160-3443	1		CAPACITOR-FXD 1UF +80-20% 50VDC CER	28480	0160-3443
A5C21	0160-3508	9		CAPACITOR-FXD 1UF +80 20% 50VDC CER	28480	0160-3508
A5C22	0160-3443	1		CAPACITOR-FXD 1UF +80-20% 50VDC CER	28480	0160-3443
A5C23	0160-3443	1		CAPACITOR-FXD 1UF +80 20% 50VDC CER	28480	0160-3443
A5C24	0160-3443	1		CAPACITOR-FXD 1UF +80-20% 50VDC CER	28480	0160-3443
A5C25	0160-3443	1	1	CAPACITOR-FXD 1UF +80-20% 50VDC CER	28480	1906-3443
A5C26	0160-3451	1		CAPACITOR-FXD 01UF +80 20% 100VDC CER	28480	0160-3451
A5CR1	1901-0376	6	4	DIODE-GEN PRP 35V 50MA DO-35	28480	1901-0376
A5CR2	1901-0376	6		DIODE-GEN PRP 35V 50MA DO-35	28480	1901-0376
A5CR3	1901-0376	6		DIODE-GEN PRP 35V 50MA DO-35	28480	1901-0376
A5CR4	1901-0376	6		DIODE-GEN PRP 35V 50MA DO-35	28480	1901-0376
A5CR5	1906-0042	3	1	DIODE-DUAL 70V VF DIFF=10MV	28480	1906-0042
A5CR6	1901-0040	1	5	DIODE-SWITCHING 30V 50MA 2NS DO-35	28480	1901-0040
A5CR7	1901-0028	5	3	DIODE-PWR RECT 400V 750MA DO-29	28480	1901-0028
A5CR8	1901-0096	7	1	DIODE-SWITCHING 120V 50MA 100NS	28480	1901-0096
A5CR9	1901-0040	1		DIODE-SWITCHING 30V 50MA 2NS DO-35	28480	1901-0040
A5CR10	1901-0040	1		DIODE-SWITCHING 30V 50MA 2NS DO-35	28480	1901-0040
A5CR11	1901-0040	1		DIODE-SWITCHING 30V 50MA 2NS DO-35	28480	1901-0040
A5CR12	1901-0040	1		DIODE-SWITCHING 30V 50MA 2NS DO-35	28480	1901-0040
A5CR13	1901-0028	5		DIODE-PWR RECT 400V 750MA DO-29	28480	1901-0028
A5CR14	1901-0028	5		DIODE-PWR RECT 400V 750MA DO-29	28480	1901-0028
A5J1	1251-6146	1	1	CONNECTOR 4-PIN M METRIC POST TYPE	28480	1251-6146
A5L1	9100-2251	0	1	INDUCTOR RF-CH-MLD 22UH 10% 105DX 26LG	28480	9100-2251
A5L2	9140-0210	1	2	COIL-MLD 100UH 5% Q=50 155DX 375LG-NOM	28480	9140-0210
A5L3	9140-0210	1		COIL-MLD 100UH 5% Q=50 155DX 375LG-NOM	28480	9140-0210
A5MP1	01300-21103	9	1	HEAT SINK-BASE	28480	01300-21103
A5MP2	01300-21102	8	1	HEAT SINK-CLAMP	28480	01300-21102
A5MP3	2200-0101	0	3	SCREW-MACH 4-40 188 IN-LG PAN-HD-POZI	28480	2200-0101
A5Q1	1855-0262	0	1	TRANSISTOR-JFET DUAL N-CHAN D-MODE SI	28480	1855-0262
A5Q2	1854-0215	1	3	TRANSISTOR NPN SI PD=350MW FT=300MHZ	04713	2N3904
A5Q3	1853-0036	2	3	TRANSISTOR PNP SI PD 310MW FT=250MHZ	28480	1853-0036
A5Q4	1853-0038	4	1	TRANSISTOR PNP SI TO-39 PD=1W FT=100MHZ	28480	1853-0038
A5Q5	1854-0419	7	2	TRANSISTOR NPN SI TO-39 PD 1W FT=200MHZ	28480	1854-0419
A5Q6	1853-0036	2		TRANSISTOR PNP SI PD=310MW FT=250MHZ	28480	1853-0036
A5Q7	1854-0215	1		TRANSISTOR NPN SI PD 350MW FT 300MHZ	04713	2N3904
A5Q8	1853-0036	2		TRANSISTOR PNP SI PD 310MW FT-250MHZ	28480	1853-0036
A5Q9	1854-0215	1		TRANSISTOR NPN SI PD=350MW FT=300MHZ	04713	2N3904
A5Q10	1854-0419	7		TRANSISTOR NPN SI TO-39 PD=1W FT=200MHZ	28480	1853-0419
A5R1	0757-1000	7	1	RESISTOR 51 1 1% 5W f TC=0±100	28480	0757-1000
A5R2	0757-0465	6	3	RESISTOR 100K 1% 125W F TC=0±100	24546	C4-1/8-T0-1003-F
A5R3	0757-0442	9	6	RESISTOR 10K 1% 125W F TC=0±100	24546	C4-1/8-T0-1002-F
A5R4	0757-0442	9		RESISTOR 10K 1% 125W F TC=0+100	24546	C4-1/8-T0-1002-F
A5R5	0757-0465	6		RESISTOR 100K 1% 125W F TC 0±100	24546	C4-1/8-T0-1003-F
A5R6	0757-0394	0	9	RESISTOR 51 1 1% 125W F TC=0±100	24546	C4-1/8-T0-51R1-F
A5R7	0757-0394	0		RESISTOR 51 1 1% 125W F TC=0±100	24546	C4-1/8-T0-51R1-F
A5R8	0757-0442	9		RESISTOR 10K 1% 125W F TC=0±100	24546	C4-1/8-T0-1002-F
A5R9	0757-0442	9		RESISTOR 10K 1% 125W F TC=0±100	24546	C4-1/8-T0-1002-F
A5R10	0757-0394	0		RESISTOR 51 1 1% 125W F TC=0+100	24546	C4-1/8-T0-51R1-F
A5R11	0757-0394	0		RESISTOR 51.1 1% .125W TC=0±100	24546	C4-1/8-T0-51R1-F
A5R12	0698-3157	3	1	RESISTOR 19.6K 1% .125W F TC=0±100	24546	C4-1/8-T0-1962-F
A5R13	0757-0440	7	3	RESISTOR 7 5K 1% 125W F TC=0+100	24546	C4-1/8-T0-7501-F
A5R14	0757-0440	7		RESISTOR 7 5K 1% 125W F TC=0±100	24546	C4-1/8-T0-7501-F
A5R15	0757-0447	4	1	RESISTOR 16 2K 1% 125W F TC=0±100	24546	C4-1/8-T0-1622-F

See introduction to this section for ordering information

Table 6-2. Replaceable Parts (Cont'd)

Reference Designator	HP Part Number	C D	Qty	Description	Mfr Code	Mfr Part Number
A5R16	2100-3273	1	1	RESISTOR-TRMR 2K 10% C SIDE-ADJ 1-TRN	28480	2100-3273
A5R17	2100-3207	1	1	RESISTOR-TRMR 5K 10% C SIDE-ADJ 1-TRN	28480	2100-3207
A5R18	0757-0280	3	1	RESISTOR 1K 1% .125W F TC=0±100	24546	C4-1/8-TO-1001-F
A5R19	2100-3274	2	1	RESISTOR-TRMR 10K 10% C SIDE-ADJ 1-TRN	28480	2100-3274
A5R20	0757-0461	2	1	RESISTOR 68 1K 1% 125W F TC=0±100	24546	C4-1/8-TO-6812-F
A5R21	2100-2520	9	1	RESISTOR-TRMR 50 20% C SIDE-ADJ 1 TRN	28480	2100-2520
A5R22	0698-3443	0	1	RESISTOR 287 1% 125W F TC=0±100	24546	C4-1/8-TO-287R-F
A5R23	0757-0411	2	1	RESISTOR 332 1% 125W F TC=0±100	24546	C4-1/8-TO-332R-F
A5R24	0757-0428	1	1	RESISTOR 1 62K 1% 125W F TC=0±100	24546	C4-1/8-TO-1621-F
A5R25	0757-0438	3	11	RESISTOR 5.11K 1% .125W F TC=0±100	24546	C4-1/8-TO-5111-F
A5R26	0757-0438	3		RESISTOR 5.11K 1% .125W F TC=0±100	24546	C4-1/8-TO-5111-F
A5R27	0757-0408	7	2	RESISTOR 243 1% .125W F TC=0±100	24546	C4-1/8-TO-243R-F
A5R28	0757-0427	0	3	RESISTOR 1.5K 1% .125W F TC=0±100	24546	C4-1/8-TO-1501-F
A5R29	0757-0427	0		RESISTOR 1.5K 1% .125W F TC=0±100	24546	C4-1/8-TO-1501-F
A5R30	0757-0408	7		RESISTOR 243 1% .125W F TC=0±100	24546	C4-1/8-TO-243-F
A5R31	0757-0413	4	3	RESISTOR 392 1% .125W F TC=0±100	24546	C4-1/8-TO-392R-F
A5R32	0757-0438	3	10	RESISTOR 5.11K 1% .125W F TC=0±100	24546	C4-1/8-TO-5111-F
A5R33	0757-0420	3	2	RESISTOR 750 1% .125W F TC=0±100	24546	C4-1/8-TO-750R-F
A5R34	0757-0420	3		RESISTOR 750 1% .125W F TC=0±100	24546	C4-1/8-TO-750R-F
A5R35	0757-0394	0		RESISTOR 51.1 1% .125W F TC=0±100	24546	C4-1/8-TO-51R1-F
A5R36	0757-0394	0		RESISTOR 51.1 1% .125W F TC=0±100	24546	C4-1/8-TO-51R1-F
A5R37	0757-0415	6	1	RESISTOR 475 1% .125W F TC=0±100	24546	C4-1/8-TO-475R-F
A5R38	0757-0413	4		RESISTOR 392 1% .125W F TC=0±100	24546	C4-1/8-TO-392R-F
A5R39	0757-0413	4		RESISTOR 392 1% .125W F TC=0±100	24546	C4-1/8-TO-392R-F
A5R40	0757-0436	1	1	RESISTOR 4.32K 1% .125W F TC=0±100	24546	C4-1/8-TO-5621-F
A5R41	0757-0290	5		RESISTOR 6.19K 1% .125W F TC=0±100	19701	MF4C1/8-TO-6191-F
A5R42	0757-0446	3	2	RESISTOR 15K 1% .125W F TC=0±100	24546	C4-1/8-TO-1502-F
A5R43	0757-0431	6	1	RESISTOR 2.43K 1% .125W F TC=0±100	24546	C4-1/8-TO-2431-F
A5R44	0757-0407	6	2	RESISTOR 200 1% .125W F TC=0±100	24546	C4-1/8-TO-201-F
A5R45	2100-1788	9	1	RESISTOR-TRMR 500 10% C TOP-ADJ 1-TURN	28480	2100-1788
A5R46	0698-7096	7	1	RESISTOR 10 10% .125W F TC=120/+400	28480	0698-7096
A5R47	0757-0438	3		RESISTOR 5.11K 1% .125W F TC=0±100	24546	C4-1/8-TO-5111-F
A5R48	0757-0438	3		RESISTOR 5.11K 1% .125W F TC=0±100	24546	C4-1/8-TO-5111-F
A5R49	0698-3447	4		RESISTOR 422 1% .125W F TC=0±100	24546	C4-1/8-TO-422R-F
A5R50	0757-0456	5	1	RESISTOR 43.2K 1% .125W F TC=0±100	24546	C4-1/8-TO-4322-F
A5R51	0757-0394	0		RESISTOR 51 1 1% 125W F TC=0±100	24546	C4-1/8-TO-51R1-F
A5R52	0757-0394	0		RESISTOR 51 1 1% 125W F TC=0+100	24546	C4-1/8-TO-51R1-F
A5R53	2100-3351	6	1	RESISTOR-TRMR 500 10% C SIDE-ADJ 1-TRN	28480	2100-3351
A5R54	0757-0442	9		RESISTOR 10K 1% 125W F TC=0±100	28480	0757-0442
A5R55	0761-0039	9	1	RESISTOR 680 5% 1W MO TC=0±200	28480	0761-0039
A5R56	0761-0070	8	1	RESISTOR 8 2K 5% 1W MO TC=0±200	28480	0761-0070
A5R57	0684-4701	6	1	RESISTOR 47 OHM 10% 25W FC TC=-400/+500	01121	CB4701
A5R58	0687-4721	6	1	RESISTOR 4 7K 10% 5W CC TC=0+647	01121	EB4721
A5R59	0687-1051	9	1	RESISTOR 1M 5% 5W CC TC=0+1000	01121	EB1051
A5R60	0683-1015	7	1	RESISTOR 100 OHM 10% 25W FC TC= -400/+500	01121	CB1015
A5R61				NOT ASSIGNED		
A5R62	0757-0274	5		RESISTOR 1 21K 1% 125W F TC=0±100	24546	C4-1/8-TO-1213-F
A5R63	0757-0407	6		RESISTOR 200 1% 125W F TC=0±100	24546	C4-1/8-TO-201-F
A5R64	0757-0458	7	1	RESISTOR 51 1K 1% 125W F TC=0+100	24546	C4-1/8-TO-5112-F
A5R65	0757-0283	6		RESISTOR 2K 1% 125W F TC=0±100	24546	C4-1/8-TO-2001-F
A5R66	0757-0465	6		RESISTOR 100K 1% 125W F TC=0+100	24546	C4-1/8-TO-1003-F
A5R67	0757-0472	5	2	RESISTOR 200K 1% 125W F TC=0±100	24546	C4-1/8-TO-2003-F
A5R68	0757-0274	5		RESISTOR 1 21K 1% 125W F TC=0±100	24546	C4-1/8-TO-1213-F
A5R69	0757-0469	0	1	RESISTOR 150K 1% 125W F TC=0±100	24546	C4-1/8-TO-1503-F
A5R70	0757-0472	5		RESISTOR 200K 1% 125W F TC=0±100	24546	C4-1/8-TO-2003-F
A5R71	0757-0482	7	2	RESISTOR 511K 1% 125W F TC=0±100	28480	0757-0482
A5R72	0698-3451	0	1	RESISTOR 133K 1% 125W F TC=0+100	24546	C4-1/8-TO-1333-F
A5R73	0757-0459	8		RESISTOR 56 2K 1% 125W F TC=0±100	24546	C4-1/8-TO-5622-F
A5R74	0698-3449	6	1	RESISTOR 28 7K 1% 125W F TC=0±100	24546	C4-1/8-TO-2872-F
A5R75	0757-0446	3		RESISTOR 15K 1% 125W F TC=0±100	24546	C4-1/8-TO-1502-F
A5R76	0757 0288	1		RESISTOR 9 09K 1% 125W F TC=0±100	19701	MF4C1/8-TO-9091-F
A5R77	0757-0438	3		RESISTOR 5 11K 1% 125W F TC=0+100	24546	C4-1/8-TO-5111-F
A5R78	0757-0482	7		RESISTOR 511K 1% 125W F TC=0±100	28480	0757-0482
A5R79	0757-0442	9		RESISTOR 10K 1% 125W F TC=0±100	24546	C4-1/8-TO-1002-F
A5R80	0698 3152	8	1	RESISTOR 3 48K 1% 125W F TC=0+100	24546	C4-1/8-TO-3481-F
A5R81	0757-0409	8	1	RESISTOR 274 1% 125W F TC=0±100	24546	C4-1/8-TO-274R-F
A5R82	0757-0416	7	2	RESISTOR 511 1% 125W F TC=0±100	24546	C4-1/8-TO-511R-F
A5R83	0757-0416	7		RESISTOR 511 1% 125W F TC=0±100	24546	C4-1/8-TO-511R-F
A5R84	0757-0273	4	1	RESISTOR 3 01K 1% 125W F TC=0±100	24546	C4-1/8-TO-3011-F
A5R85	0757-0394	0		RESISTOR 51 1 1% 125W F TC=0±100	24546	C4-1/8-TO-51R1-F
A5R86	0757-0438	3		RESISTOR 5 11K 1% 125W F TC=0±100	24546	C4-1/8-TO-5111-F
A5R87	0757-0438	3		RESISTOR 5 11K 1% 125W F TC=0±100	24546	C4-1/8-TO-5111-F
A5R88	0757-0438	3		RESISTOR 5 11K 1% 125W F TC=0±100	24546	C4-1/8-TO-5111-F
A5R89	0757-0401	0	2	RESISTOR 100 1% .125W F TC=0±100	24546	C4-1/8-TO-100R-F
A5R90	0757-0401	0		RESISTOR 100 1% .125W F TC=0±100	24546	C4-1/8-TO-100R-F
A5R91	0757-0438	3		RESISTOR 5 11K 1% 125W F TC=0±100	24546	C4-1/8-TO-5111-F

See introduction to this section for ordering information

Table 6-2. Replaceable Parts (Cont'd)

Reference Designator	HP Part Number	C D	Qty	Description	Mfr Code	Mfr Part Number
A5R92	0757-0438	3		RESISTOR 5 11K 1% 125W F TC=0±100	24546	C4-1/8-T0-5111-F
A5R93	0687-2211	5	1	RESISTOR 220 10% 5W CC TC=0+529	01121	EB2211
A5R94	0687-1021	3	1	RESISTOR 1K 10% 5W CC TC=0+529	01121	EB1021
A5R95	0757-0427	0		RESISTOR 1 5K 1% 125W F TC=0±100	24546	C4-1/8-T0-1501-F
A5S1	3101-2348	2	1	SWITCH-SL SPDT SUBMIN 02A 20VDC PC	28480	3101-2348
A5U1	1826-0023	0	1	IC MODULATOR 14-DIP-C	04713	MC1496L
A5U2	1858-0058	8	1	TRANSISTOR ARRAY 14-PIN PLSTC TO-116	04713	MPQ3906
A5U3	1821-0001	4	2	TRANSISTOR ARRAY 14-PIN PLSTC DIP	04713	MC3346P
A5U4	1820-1427	8	1	IC DCDR TTL LS 2-TO-4 LINE DUAL 2-INP	01295	SN74LS156N
A5U5	1821-0001	4		TRANSISTOR ARRAY 14-PIN PLSTC DIP	04713	MC3346P
A5U6	1820-0681	4	1	IC GATE TTL S NAND QUAD 2-INP	01295	SN74S00N
A5V1	2140-0008	8	6	LAMP-GLOW A1A 115/59VDC 500UA T-2-BULB	28480	2140-0008
A5V2	2140 0008	8		LAMP-GLOW A1A 115/59VDC 500UA T-2-BULB	28480	2140-0008
A5V3	2140-0008	8		LAMP-GLOW A1A 115/59VDC 500UA T-2-BULB	28480	2140-0008
A5V4	2140-0008	8		LAMP-GLOW A1A 115/59VDC 500UA T-2-BULB	28480	2140-0008
A5V5	2140-0008	8		LAMP-GLOW A1A 115/59VDC 500UA T-2-BULB	28480	2140-0008
A5V6	2140-0008	8		LAMP-GLOW A1A 115/59VDC 500UA T-2-BULB	28480	2140-0008
A5VR1	1902-0048	1	1	DIODE-ZNR 6 81V 5% DO-35 PD= 4W	28480	1902-0048
A5VR2	1902-3149	9	1	DIODE-ZNR 9 09V 5% DO-7 PD= 4W TC=+ 053%	28480	1902-3149
A5VR3	1902-0184	6	1	DIODE-ZNR 16 2V 5% DO-7 PD= 4W TC=+ 066%	28480	1902-0184
A5VR4	1902-0041	4	2	DIODE-ZNR 5 11V 5% DO-7 PD= 4W TC=- 009%	28480	1902-0041
A5VR5	1902 0041	4		DIODE-ZNR 5 11V 5% DO 7 PD= 4W TC=- 009%	28480	1902-0041
A5XU1	1200-0638	7	5	SOCKET-IC 14-CONT DIP DIP-SLDR	28480	1200-0638
A5XU2	1200-0638	7		SOCKET-IC 14-CONT DIP DIP-SLDR	28480	1200-0638
A5XU3	1200-0638	7		SOCKET-IC 14-CONT DIP DIP-SLDR	28480	1200-0638
A5XU4	1200-0607	0	1	SOCKET-IC 16-CONT DIP DIP SLDR	28480	1200-0607
A5XU5	1200-0638	7		SOCKET-IC 14-CONT DIP DIP-SLDR	28480	1200-0638
A5XU6	1200-0638	7		SOCKET-IC 14-CONT DIP DIP SLDR	28480	1200-0638
A5XU7	1200-0796	8	1	SOCKET-IC 8-CONT DIP DIP-SLDR	28480	1200-0796
				MISCELLANEOUS PARTS		
	1258-0124	7	2	SHUNT PROGRAMMABLE 1 DBL PIN SET, 100	28480	1258-0124

See introduction to this section for ordering information

Table 6-2. Replaceable Parts (Cont'd)

Reference Designator	HP Part Number	C D	Qty	Description	Mfr Code	Mfr Part Number
A6	01317-66501	4	1	PC BOARD ASSEMBLY-FOCUS	28480	01317-66501
A6C1	0160-3443	1	7	CAPACITOR-FXD 1μF +80-20% 50VDC CER	28480	0160-3443
A6C2	0140 0203	3	1	CAPACITOR-FXD 30PF ±5% 500VDC MICA	72136	DM15E300J0500WV1CR
A6C3	0160-4204	4	3	CAPACITOR FXD 033μF ±10% 500VDC CER	28480	0160-4204
A6C4	0121-0474	0	1	CAPACITOR V TRMR PSTN 3-1 5PF 600V	28480	0121-0474
A6C5	0170 0022	7	1	CAPACITOR-FXD 1μF +20% 600VDC POLYE	28480	0170 0022
A6C6	0160-4204	4		CAPACITOR-FXD 033μF +10% 500VDC CER	28480	0160-4204
A6C7	0160-5379	6	1	CAPACITOR-FXD 4700P ±20% 4K VDC CER	28480	0160-5379
A6C8	0180-0374	3	2	CAPACITOR-FXD 10μF ±10% 20VDC TA	56289	150D106X9020B2
A6C9	0160-3443	1		CAPACITOR FXD 1μF +80-20% 50VDC CER	28480	0160-3443
A6C10	0160-3443	1		CAPACITOR FXD 1μF +80-20% 50VDC CER	28480	0160-3443
A6C11	0160-3443	1		CAPACITOR-FXD 1μF +80-20% 50VDC CER	28480	0160 3443
A6C12	0160-3443	1		CAPACITOR-FXD 1μF +80 20% 50VDC CER	28480	0160-3443
A6C13	0180-0374	3		CAPACITOR-FXD 10μF +10% 20VDC TA	56289	150D106X9020B2
A6C14	0160 0168	1	4	CAPACITOR-FXD 1μF ±10% 200VDC POLYE	28480	0160-0168
A6C15	0160-0168	1		CAPACITOR FXD 1μF ±10% 200VDC POLYE	28480	0160-0168
A6C16	0160 0168	1		CAPACITOR-FXD 1μF ±10% 200VDC POLYE	28480	0160-0168
A6C17	0160 0168	1		CAPACITOR-FXD 1μF ±10% 200VDC POLYE	28480	0160-0168
A6C18	0160-2207	3	1	CAPACITOR FXD 300PF ±5% 300VDC MICA	28480	2207
A6C19	0160-3443	1		CAPACITOR-FXD 1μF +80-20% 50VDC CER	28480	0160 3443
A6C20	0160 3443	1		CAPACITOR-FXD 1μF +80-20% 50VDC CER	28480	0160 3443
A6C21	0160-4204	4		CAPACITOR-FXD 033μF ±10% 500VDC CER	28480	0160-4204
A6C22	0140-0178	1	1	CAPACITOR-FXD 560PF ±2% 300VDC MICA	72136	DM15F561G0300WV1CR
A6CR1	1901-0040	1	24	DIODE-SWITCHING 30V 50MA 2NS DO-35	28480	1901-0040
A6CR2	1901-0040	1		DIODE SWITCHING 30V 50MA 2NS DO 35	28480	1901 0040
A6CR3	1901-0040	1		DIODE SWITCHING 30V 50MA 2NS DO 35	28480	1901 0040
A6CR4	1901 0040	1		DIODE-SWITCHING 30V 50MA 2NS DO 35	28480	1901 0040
A6CR5	1901-0040	1		DIODE-SWITCHING 30V 50MA 2NS DO-35	28480	1901-0040
A6CR6	1901-0040	1		DIODE-SWITCHING 30V 50MA 2NS DO-35	28480	1901-0040
A6CR7	1901-0040	1		DIODE-SWITCHING 30V 50MA 2NS DO-35	28480	1901-0040
A6CR8	1901-0040	1		DIODE SWITCHING 30V 50MA 2NS DO 35	28480	1901-0040
A6CR9	1901-0040	1		DIODE-SWITCHING 30V 50MA 2NS DO-35	28480	1901-0040
A6CR10	1901-0040	1		DIODE SWITCHING 30V 50MA 2NS DO 35	28480	1901-0040
A6CR11	1901-0040	1		DIODE-SWITCHING 30V 50MA 2NS DO-35	28480	1901-0040
A6CR12	1901-0040	1		DIODE-SWITCHING 30V 50MA 2NS DO-35	28480	1901-0040
A6CR13	1901-0026	3	4	DIODE-PWR RECT 200V 750MA DO-29	28480	1901-0026
A6CR14	1901-0026	3		DIODE PWR RECT 200V 750MA DO-29	28480	1901-0026
A6CR15	1901-0026	3		DIODE-PWR RECT 200V 750MA DO-29	28480	1901-0026
A6CR16	1901-0026	3		DIODE-PWR RECT 200V 750MA DO-29	28480	1901-0026
A6CR17	1901-0040	1		DIODE SWITCHING 30V 50MA 2NS DO-35	28480	1901-0040
A6CR18	1901-0040	1		DIODE-SWITCHING 30V 50MA 2NS DO 35	28480	1901-0040
A6CR19	1901-0040	1		DIODE SWITCHING 30V 50MA 2NS DO-35	28480	1901-0040
A6CR20	1901-0040	1		DIODE-SWITCHING 30V 50MA 2NS DO-35	28480	1901-0040
A6CR21	1901-0040	1		DIODE SWITCHING 30V 50MA 2NS DO-35	28480	1901-0040
A6CR22	1901-0040	1		DIODE-SWITCHING 30V 50MA 2NS DO-35	28480	1901-0040
A6CR23	1901-0040	1		DIODE-SWITCHING 30V 50MA 2NS DO-35	28480	1901-0040
A6CR24	1901-0040	1		DIODE SWITCHING 30V 50MA 2NS DO-35	28480	1901-0040
A6CR25	1901-0040	1		DIODE-SWITCHING 30V 50MA 2NS DO-35	28480	1901-0040
A6CR26	1901-0040	1		DIODE-SWITCHING 30V 50MA 2NS DO-35	28480	1901-0040
A6CR27	1901-0040	1		DIODE-SWITCHING 30V 50MA 2NS DO-35	28480	1901-0040
A6CR28	1901-0040	1		DIODE-SWITCHING 30V 50MA 2NS DO-35	28480	1901-0040
A6H1	2200-0103	2	3	SCREW-MACH 4-40 .25-IN-LG PAN-HD-POZI	00000	ORDER BY DESCRIPTION
A6L1	9100-2276	9	2	COIL-MLD 100μM 10% Q=50 095DX 25LG-NOM	28480	9100-2276
A6L2	9100-2276	9		COIL-MLD 100μM 10% Q=50 095DX 25LG-NOM	28480	9100-2276
A6MP1	1205-0213	4	1	HEAT SINK SGL TO-5/TO-39-C8	28480	1205-0213
A6MP2	01300-21102	8	1	HEAT SINK-CLAMP	28480	01300-21102
A6MP3	5040-0401	6	1	SUPPORT CAPACITOR	28480	5040-0401
A6MP4	01300-21103	9	1	HEAT SINK-BASE	28480	01300-21103
A6MP5	1200-0185	9	5	INSULATOR—XSTR-NYLON	28480	1200-0185
A6Q1	1853-0036	2	15	TRANSISTOR PNP SI PD=310MW FT=250MHZ	28480	1853-0036
A6Q2	1853-0036	2		TRANSISTOR PNP SI PD=310MW FT=250MHZ	28480	1853-0036
A6Q3	1853-0036	2		TRANSISTOR PNP SI PD=310MW FT=250MHZ	28480	1853-0036
A6Q4	1853-0036	2		TRANSISTOR PNP SI PD=310MW FT=250MHZ	28480	1853-0036
A6Q5	1854-0215	1	3	TRANSISTOR NPN SI PD=350MW FT=300MHZ	04713	2N3904
A6Q6	1853-0036	2		TRANSISTOR PNP SI PD=310MW FT=250MHZ	28480	1853-0036
A6Q7	1854-0215	1		TRANSISTOR NPN SI PD=350MW FT=300MHZ	04713	2N3904
A6Q8	1853-0036	2		TRANSISTOR PNP SI PD=310MW FT=250MHZ	28480	1853-0036
A6Q9	1853-0036	2		TRANSISTOR PNP SI PD=310MW FT=250MHZ	28480	1853-0036
A6Q10	1853-0036	2		TRANSISTOR PNP SI PD=310MW FT=250MHZ	28480	1853-0036
A6Q11	1854-0092	2	1	TRANSISTOR NPN SI PD=200MW FT=600MHZ	28480	1854-0092
A6Q12				NOT ASSIGNED		
A6Q13	1853-0036	2		TRANSISTOR PNP SI PD=310MW FT=250MHZ	28480	1853-0036
A6Q14	1853-0036	2		TRANSISTOR PNP SI PD=310MW FT=250MHZ	28480	1853-0036
A6Q15	1853-0036	2		TRANSISTOR PNP SI PD=310MW FT=250MHZ	28480	1853-0036
A6Q16	1853-0036	2		TRANSISTOR PNP SI PD=310MW FT=250MHZ	28480	1853-0036
A6Q17	1854-0404	0	2	TRANSISTOR NPN SI TO-18 PD=360MW	28480	1854-0404

See introduction to this section for ordering information

Table 6-2. Replaceable Parts (Cont'd)

Reference Designator	HP Part Number	C D	Qty	Description	Mfr Code	Mfr Part Number
A6Q18	1853-0036	2		TRANSISTOR PNP SI PD=310MW FT=250MHZ	28480	1853-0036
A6Q19	1854-0404	0		TRANSISTOR NPN SI TO-18 PD=360MW	28480	1854-0404
A6Q20	1853-0036	2		TRANSISTOR PNP SI PD=310MW FT=250MHZ	28480	1853-0036
A6Q21	1854-0234	4	1	TRANSISTOR NPN 2N3440 SI TO-5 PD=1W	0192B	2N3440
A6Q22	1854-0215	1		TRANSISTOR NPN SI PD 350MW FT=300MHZ	04713	2N3904
A6Q23	1853-0036	2		TRANSISTOR PNP SI PD=310MW FT=250MHZ	28480	1853-0036
A6Q24	1853-0038	4	1	TRANSISTOR PNP SI TO-39 PD=1W FT=100MHZ	28480	1853-0038
A6Q25	1854-0419	7	1	TRANSISTOR NPN SI TO-39 PD=1W FT=200MHZ	28480	1854-0419
A6R1	0684 4701	6	16	RESISTOR 47 10% 25W FC TC -400/+500	01121	CB4701
A6R2	0757-0439	4	8	RESISTOR 6 81K 1% 125W F TC=0±100	24546	C4-1/8-TO-6811-F
A6R3	0757-0317	7	1	RESISTOR 1 33K 1% 125W F TC=0+100	24546	C4-1/8-TO-1331-F
A6R4	0757-0439	4		RESISTOR 6 81K 1% 125W F TC=0+100	24546	C4-1/8-TO-6811-F
A6R5	0684 4701	6		RESISTOR 47 10% 25W FC TC=-400 +500	01121	CB4701
A6R6	0757 0438	3	16	RESISTOR 5 11K 1% 125W F TC=+100	24546	C4 1 8 TO 5111 F
A6R7	0757 0438	3		RESISTOR 5 11K 1% 125W F TC +100	24546	C4 1 8 TO 5111 F
A6R8	0757-0438	3		RESISTOR 5 11K 1% 125W F TC=±100	24546	C4 1 8 TO 5111 F
A6R9	0757 0438	3		RESISTOR 5 11K 1% 125W F TC=±100	24546	C4 1 8 TO 5111 F
A6R10	2100 3352	7	8	RESISTOR-TRMR 1K 10% C SIDE ADJ 1 TRN	28480	2100 3352
A6R11	2100 3352	7		RESISTOR-TRMR 1K 10% C SIDE-ADJ 1-TRN	28480	2100-3352
A6R12	0757-0416	7	9	RESISTOR 511 1% 125W F TC=0+100	24546	C4-1/8-TO-511R-F
A6R13	0757-0416	7		RESISTOR 511 1% 125W F TC=0+100	24546	C4-1/8-TO-511R-F
A6R14	0684 4731	2	4	RESISTOR 47K 10% 25W FC TC -400/+800	01121	CB4731
A6R15	0684 4701	6		RESISTOR 47 10% 25W FC TC -400 +500	01121	CB4701
A6R16	0757-0439	4		RESISTOR 6 81K 1% 125W F TC=0+100	24546	C4-1-8-TO-6811-F
A6R17	0757-0424	7	1	RESISTOR 1 1K 1% 125W F TC=0+100	24546	C4-1 8-TO-1101-F
A6R18	0757 0439	4		RESISTOR 6 81K 1% 125W F TC=0±100	24546	C4-1/8-TO-6811-F
A6R19	0684-4701	6		RESISTOR 47 10% 25W FC TC -400 +500	01121	CB4701
A6R20	0757-0438	3		RESISTOR 5 11K 1% 125W F TC=+100	24546	C4-1/8-TO-5111-F
A6R21	0757-0438	3		RESISTOR 5 11K 1% 125W F TC=±100	24546	C4-1/8-TO-5111-F
A6R22	0757-0438	3		RESISTOR 5 11K 1% 125W F TC=+100	24546	C4-1/8-TO-5111-F
A6R23	2100 3352	7		RESISTOR-TRMR 1K 10% C SIDE-ADJ 1-TRN	28480	2100 3352
A6R24	2100-3352	7		RESISTOR-TRMR 1K 10% C SIDE-ADJ 1-TRN	28480	2100-3352
A6R25	0757 0438	3		RESISTOR 5 11K 1% 125W F TC=+100	24546	C4-1/8-TO-5111-F
A6R26	0757-0416	7		RESISTOR 511 1% 125W F TC 0±100	24546	C4-1/8-TO-511R-F
A6R27	0757-0416	7		RESISTOR 511 1% 125W F TC=0+100	24546	C4-1/8-TO-511R-F
A6R28	0684-4731	2		RESISTOR 47K 10% 25W FC TC 400/+800	01121	CB4731
A6R29	0684 4701	6		RESISTOR 47 10% 25W FC TC= 400/+500	01121	CB4701
A6R30	0684-4701	6		RESISTOR 47 10% 25W FC TC -400/+500	01121	CB4701
A6R31	0757-0414	5	2	RESISTOR 432 1% 125W F TC=0+100	24546	C4 1 8 TO 432R F
A6R32	0757-0414	5		RESISTOR 432 1% 125W F TC 0+100	24546	C4 1 8 TO 432R F
A6R33	0757-0409	8	4	RESISTOR 274 1% 125W F TC=0+100	24546	C4 1 8-TO-274R F
A6R34	0757-0280	3	6	RESISTOR 1K 1% 125W F TC=0+100	24546	C4 1 8 TO 1001-F
A6R35	0757-0409	8		RESISTOR 274 1% 125W F TC 0+100	24546	C4 1 8 TO 274R F
A6R36	0757-0280	3		RESISTOR 1K 1% 125W F TC=0±100	24546	C4 1 8 TO 1001 F
A6R37	0757-0728	4	1	RESISTOR 619 1% 25W F TC=0+100	24546	C4-1 8 TO 619R F
A6R38	0757-0907	1	2	RESISTOR 200 2% 125W F TC=0+100	24546	C4-1 8 TO-201 G
A6R39	0757-0907	1		RESISTOR 200 2% 125W F TC 0+100	24546	C4 1 8 TO 201 G
A6R40	0757-0280	3		RESISTOR 1K 1% 125W F TC 0+100	24546	C4-1 8-TO-1001 F
A6R41	0698-0085	0	1	RESISTOR 2 61K 1% 125W F TC 0±100	24546	C4 1 8-TO-2611-F
A6R42	0757-0346	2	1	RESISTOR 10 1% 125W F TC 0+100	24546	C4-1/8-TO-10R0 F
A6R43	2100-2574	3	1	RESISTOR-TRMR 500 10% C SIDE-ADJ 1-TRN	30983	ET50X501
A6R44	2100-3274	2	2	RESISTOR-TRMR 10K 10% C SIDE-ADJ 1 TRN	30983	2100-3274
A6R45	0757 0437	2	1	RESISTOR 4 75K 1% 125W F TC 0+100	24546	C4-1/8-TO-4751 F
A6R46	0757-0283	6	1	RESISTOR 2K 1% 125W F TC 0±100	24546	C4-1/8-TO-2001-F
A6R47	2100-2489	9	1	RESISTOR-TRMR 5K 10% C SIDE-ADJ 1-TRN	30983	ET50X502
A6R48	0684-4701	6		RESISTOR 47 10% 25W FC TC=-400/+500	01121	CB4701
A6R49	0684-4701	6		RESISTOR 47 10% 25W FC TC=-400/+500	01121	CB4701
A6R50	0687-4711	4	2	RESISTOR 470 10% 5W CC TC=0+529	01121	EB4711
A6R51	0684-3901	6	3	RESISTOR 39 10% 25W FC TC= 400/+500	01121	CB3901
A6R52	0687-4711	4		RESISTOR 470 10% 5W CC TC=0+529	01121	EB4711
A6R53				NOT ASSIGNED		
A6R54	0684-4701	6		RESISTOR 47 10% 25W FC TC= 400/+500	01121	CB4701
A6R55	0757-0439	4		RESISTOR 6 81K 1% 125W F TC=0±100	24546	C4-1/8-TO-6811-F
A6R56	0757-0421	4	2	RESISTOR 825 1% 125W F TC 0±100	24546	C4-1/8-TO-825R-F
A6R57	0757-0439	4		RESISTOR 6 81K 1% 125W F TC=0±100	24546	C4-1/8-TO-6811-F
A6R58	0684-4701	6		RESISTOR 47 10% 25W FC TC 400/+500	01121	CB4701
A6R59	0757-0438	3		RESISTOR 5 11K 1% 125W F TC=±100	24546	C4-1/8-TO-5111-F
A6R60	0757-0438	3		RESISTOR 5 11K 1% 125W F TC=+100	24546	C4-1/8-TO-5111-F
A6R61	2100-3352	7		RESISTOR-TRMR 1K 10% C SIDE-ADJ 1-TRN	28480	2100-3352
A6R62	2100-3352	7		RESISTOR-TRMR 1K 10% C SIDE-ADJ 1-TRN	28480	2100-3352
A6R63	0757-0438	3		RESISTOR 5 11K 1% 125W F TC=±100	24546	C4-1/8-TO-5111-F
A6R64	0757-0438	3		RESISTOR 5 11K 1% 125W F TC=+100	24546	C4-1/8-TO-5111-F
A6R65	0757-0416	7		RESISTOR 511 1% 125W F TC=0±100	24546	C4-1/8-TO-511R-F
A6R66	0757-0416	7		RESISTOR 511 1% 125W F TC=0±100	24546	C4-1/8-TO-511R-F
A6R67	0684-4731	2		RESISTOR 47K 10% 25W FC TC= 400/+800	01121	CB4731
A6R68	0684-4701	6		RESISTOR 47 10% 25W FC TC= 400/+500	01121	CB4701
A6R69	0757-0439	4		RESISTOR 6 81K 1% 125W F TC 0±100	24546	C4-1/8-TO-6811-F
A6R70	0757-0421	4		RESISTOR 825 1% 125W F TC=0±100	24546	C4-1/8-TO-825R-F

See introduction to this section for ordering information

Table 6-2. Replaceable Parts (Cont'd)

Reference Designator	HP Part Number	C D	Qty	Description	Mfr Code	Mfr Part Number
A6R71	0757-0439	4		RESISTOR 6 81K 1% 125W F TC=0±100	24546	C4-1/8 TO-6811-F
A6R72	0684-4701	6		RESISTOR 47 10% 25W FC TC=-400/+500	01121	CB4701
A6R73	0757-0438	3		RESISTOR 5 11K 1% 125W F TC=±100	24546	C4-1/8-TO-5111-F
A6R74	2100-3352	7		RESISTOR-TRMR 1K 10% C SIDE-ADJ 1-TRN	28480	2100-3352
A6R75	2100-3352	7		RESISTOR-TRMR 1K 10% C SIDE-ADJ 1-TRN	28480	2100-3352
A6R76	0757 0438	3		RESISTOR 5 11K 1% 125W F TC=±100	24546	C4-1/8-TO-5111-F
A6R77	0757-0438	3		RESISTOR 5 11K 1% 125W F TC ±100	24546	C4-1/8-TO-5111-F
A6R78	0757-0438	3		RESISTOR 5 11K 1% 125W F TC=±100	24546	C4-1/8-TO-5111-F
A6R79	0757-0416	7		RESISTOR 511 1% 125W F TC=0±100	24546	C4-1/8-TO-511R-F
A6R80	0757-0416	7		RESISTOR 511 1% 125W F TC=0±100	24546	C4-1/8-TO-511R-F
A6R81	0684-4731	2		RESISTOR 47K 10% 25W FC TC=-400/+800	01121	CB4731
A6R82	0684-4701	6		RESISTOR 47 10% 25W FC TC=-400/+500	01121	CB4701
A6R83	0684-4701	6		RESISTOR 47 10% 25W FC TC=-400/+500	01121	CB4701
A6R84	0757-0280	3		RESISTOR 1K 1% 125W F TC=0±100	24546	C4-1/8-TO-1001-F
A6R85	0757-0402	1	1	RESISTOR 110 1% 125W F TC=0+100	24546	C4-1/8-TO-111-F
A6R86	0757-0294	9	1	RESISTOR 17 8 1% 125W F TC=0±100	19701	MF4C1/8-TO-17R8-F
A6R87	0757-0416	7		RESISTOR 511 1% 125W F TC=0±100	24546	C4-1/8-TO-511R-F
A6R88	0757 0409	8		RESISTOR 274 1% 125W F TC=0±100	24546	C4-1/8-TO-274R-F
A6R89	0757-0280	3		RESISTOR 1K 1% 125W F TC=0+100	24546	C4-1/8-TO-1001-F
A6R90	2100-3274	2		RESISTOR-TRMR 10K 10% C SIDE-ADJ 1-TRN	28480	2100-3274
A6R91	0757-0747	7	1	RESISTOR 5 11K 1% 25W F TC=0+100	24546	C5-1/4-TO-5111-F
A6R92	0757-0339	3	1	RESISTOR 3 01K 1% 25W F TC=0±100	24546	C5-1/4-TO-3011-F
A6R93	0757-0409	8		RESISTOR 274 1% 125W F TC=0±100	24546	C4-1/8-TO-274R-F
A6R94	0757-0280	3		RESISTOR 1K 1% 125W F TC=0±100	24546	C4-1/8-TO-1001-F
A6R95	0684-4701	6		RESISTOR 47 10% 25W FC TC=-400/+500	01121	CB4701
A6R96	0811-0007	8	1	RESISTOR 10K 1% 5W PW TC=0+20	28480	0811 0007
A6R97	0684-4701	6		RESISTOR 47 10% 25W FC TC=-400/+500	01121	CB4701
A6R98	0687-4701	2	1	RESISTOR 47 10% 5W CC TC=0+412	01121	EB4701
A6R99				NOT ASSIGNED		
A6R100	0757-0736	4	2	RESISTOR 1 5K 1% 25W F TC=0±100	24546	C5-1/4-TO-1501-F
A6R101	0757-0764	8	1	RESISTOR 33 2K 1% 25W F TC=0±100	24546	C5-1/4-TO-3322-F
A6R102	0764-0005	5	1	RESISTOR 10K 5% 2W MO TC=0±200	28480	0764-0005
A6R103	0757 0736	4		RESISTOR 1 5K 1% 25W F TC=0+100	24546	C5-1/4-TO-1501-F
A6R104	0757-0290	5	1	RESISTOR 6 19K 1% 125W F TC=0±100	19701	MF4C1/8-TO 6191-F
A6R105	0684-3901	6		RESISTOR 39 10% 25W FC TC= 400/+500	01121	CB3901
A6R106	0684-3901	6		RESISTOR 39 10% 25W FC TC= 400/+500	01121	CB3901
A6R107	0687-1821	1	1	RESISTOR 1 8K 10% 5W CC TC=0+647	01121	EB1821
A6R108	0687-2231	9	1	RESISTOR 22K 10% 5W CC TC=0+765	01121	EB2231
A6R109	0687-1051	9	1	RESISTOR 1M 10% 5W CC TC=0+1000	01121	EB1051
A6R110	0687-6801	7	1	RESISTOR 68 10% 5W CC TC=0+412	01121	EB6801
A6VR1				NOT ASSIGNED		
A6VR2				NOT ASSIGNED		
A6VR3	1902-0041	4	2	DIODE-ZNR 5 11V 5% DO-7 PD= 4W TC= 009%	28480	1902-0041
A6VR4	1902-0041	4		DIODE-ZNR 5 11V 5% DO-7 PD= 4W TC=-009%	28480	1902-0041

See introduction to this section for ordering information

Table 6-2. Replaceable Parts (Cont'd)

Reference Designator	HP Part Number	C D	Qty	Description	Mfr Code	Mfr Part Number
A7	01317-66504	7	1	PC BOARD ASSEMBLY-LEFT CONNECTOR	28480	01317 66504
A7XA2	1251-1558	9	4	CON PC 15F	28480	1251-1558
A7XA4	1251-1558	9		CON PC 15F	28480	1251-1558
A7XA6	1251-1558	9		CON PC 15F	28480	1251-1558
A7XA14	1251-1558	9		CON PC 15F	28480	1251-1558
A8	01317-66505	8	1	PC BOARD ASSEMBLY-RIGHT CONNECTOR	28480	01317-66505
A8XA1	1251 1558	9	3	CON PC 15F	28480	1251-1558
A8XA3	1251-1558	9		CON PC 15F	28480	1251-1558
A8XA5	1251-1558	9		CON PC 15F	28480	1251-1558
A8S1	3101-0973	5	1	SWITCH SLIDE DPDT	28480	3101-0973

See introduction to this section for ordering information

Table 6-2. Replaceable Parts (Cont'd)

Reference Designator	HP Part Number	C D	Qty	Description	Mfr Code	Mfr Part Number
A9	01311-66508		1	PC BOARD ASSEMBLY-HIGH VOLTAGE	28480	01311-66508
A9C1	0180-1784	1	1	CAPACITOR-FXD 1000μF +75-10% 40VDC AL	28480	0180-1784
A9C2	0180-0648	4	1	CAPACITOR-FXD 1μF +10% 35VDC TA	28480	0180-0648
A9C3	0180-0094	4	1	CAPACITOR-FXD 100μF +75 -10% 25VDC AL	56289	30D107G025DD2
A9C4	0170-0018	1	1	CAPACITOR-FXD 1UF ±5% 200VDC POLY	28480	0170-0018
A9C5	0180-0197	8	1	CAPACITOR-FXD 2 2μF ±10% 20VDC TA	56289	150D225X9020A2
A9C6	0160-3508	9	2	CAPACITOR-FXD 1μF +80-20% 50VDC CER	28480	0160-3508
A9C7	0160-0302	5	1	CAPACITOR-FXD 018μF ±10% 200VDC POLYE	28480	0160-0302
A9C8	0160-3508	9		CAPACITOR-FXD 1μF +80-20% 50VDC CER	28480	0160-3508
A9C9	0160-0168	1	1	CAPACITOR-FXD 1μF +80-20% 50VDC CER	28480	0168
A9C10	0160-3558	9	1	CAPACITOR-FXD 1μF ±20% 50VDC CER	28480	0160-3558
A9C11	0180-2255	3	1	CAPACITOR—FXD 2 2μF ±20% 20VDC TA	28480	0180-2255
A9C12	0150-0052	1	1	CAPACITOR-FXD 05μF ±20% 400VDC CER	28480	0150-0052
A9C13	0160-4148	5	2	CAPACITOR-FXD 033μF ±20% 6KVDC	56289	430P333060
A9C14	0160-4148	5		CAPACITOR-FXD 033μF ±20% 6KVDC	56289	430P333060
A9C15	0160-3960	7	2	CAPACITOR-FXD 1000PF ±20% 8KVDC	28480	0160-3960
A9C16	0160-2264	2	2	CAPACITOR-FXD 20PF ±5% 500VDC CER 0±30	28480	0160-2264
A9C17	0160-2264	2	2	CAPACITOR-FXD 20PF ±5% 500VDC CER 0±30	28480	0160-2264
A9C18	0180-0269	5	2	CAPACITOR-FXD 1μF +50-10% 150VDC AL	56289	30D105G150BA2
A9C19	0160-3960	7		CAPACITOR-FXD 1000PF ±20% 8KVDC	28480	0160-3960
A9C20	0160-0678	8	1	CAPACITOR-FXD 01μF ±20% 6KVDC	28480	0160-0678
A9C21	0180-0269	5		CAPACITOR-FXD 1μF +50-10% 150VDC AL	56289	30D105G150BA2
A9C22	0160-0544	7	1	CAPACITOR-FXD 022μF ±20% 4KVDC	28480	0160-0544
A9C23	0160-0684	6	1	CAPACITOR-FXD 1000PF ±20% 4KVDC	28480	0160-0684
A9C24	0160-4051	9	1	CAPACITOR-FXD 01μF ±20% 4KVDC	28480	0160-4051
A9C25	0160-3622	8	1	CAPACITOR-FXD 1μF +80%-20% 100 VDC CER	28480	0160-3622
A9CR1	1901-0040	1	2	DIODE-SWITCHING 30V 50MA 2NS DO-35	28480	1901-0040
A9CR2	1901-0040	1		DIODE-SWITCHING 30V 50MA 2NS DO-35	28480	1901-0040
A9CR3	1901-0028	5	11	DIODE-PWR RECT 400V 750VA DO-29	28480	1901-0028
A9CR4	1901-0028	5		DIODE-PWR RECT 400V 750VA DO-29	28480	1901-0028
A9CR5	1901-0028	5		DIODE-PWR RECT 400V 750VA DO-29	28480	1901-0028
A9CR6				NOT ASSIGNED		
A9CR7	1901-0652	1	1	DIODE-HV RECT 12KV 10MA 250NS	28480	1901-0652
A9CR8	1901-0028	5		DIODE-PWR RECT 400V 750VA DO-29	28480	1901-0028
A9CR9	1901-0028	5		DIODE-PWR RECT 400V 750VA DO-29	28480	1901-0028
A9CR10	1901-0028	5		DIODE-PWR RECT 400V 750VA DO-29	28480	1901-0028
A9CR11	1901-0028	5		DIODE-PWR RECT 400V 750VA DO-29	28480	1901-0028
A9CR12	1901-0028	5		DIODE-PWR RECT 400V 750VA DO-29	28480	1901-0028
A9CR13	1901-0028	5		DIODE-PWR RECT 400V 750VA DO-29	28480	1901-0028
A9CR14	1901-0028	5		DIODE-PWR RECT 400V 750VA DO-29	28480	1901-0028
A9CR15	1901-0028	5		DIODE-PWR RECT 400V 750VA DO-29	28480	1901-0028
A9CR16	1906-0006	9	1	DIODE-FW BRDG 400V 1A	28480	1906-0006
A9F1	2110-0303	4	1	FUSE 2A 250V 1 25X 25 UL	28480	2110-0303
A9XF1	2110-0269	0	2	FUSEHOLDER-CLIP TYPE 25D FUSE	28480	2110-0269
A9H1	2360-0275	7	6	SCREW MAC 6-32 .250 IN-LNG NYLON	00000	ORDER BY DESCRIPTION
A9J1	1251-3276	2	1	CONNECTOR 6-PIN M POST TYPE	28480	1251-3276
A9L1	9140-0171	3	1	COIL-MLD 40μH 10% Q=20 296DX 968 LG-NOM	28480	9140-0171
A9L2	9140-0138	2	1	COIL-MLD 180μM 5% Q=65 155DX 375 LG-NOM	28480	9140-0138
A9MP1	0340-0007	9	3	CERAMIC STANDOFF-RND 5-IN-LG 6-32 THD 5-IN-OD	00000	ORDER BY DESCRIPTION
A9Q1				NOT ASSIGNED		
A9Q2				NOT ASSIGNED		
A9Q3	1884-0064	1	1	THYRISTOR-SCR VRRM=200	03508	C106B41
A9R1	0687-3921	6	1	RESISTOR 3 9K 10% 5W CC TC=0+647	28480	0687-3921
A9R2	0687-3311	8	1	RESISTOR 330 10% 5W CC TC=0+529	28480	0687-3311
A9R3	0757-0488	3	1	RESISTOR 909K 1% 125W F TC=0±100	28480	0757-0488
A9R4	0757-0486	1	1	RESISTOR 750K 1% 125W F TC=0±100	28480	0757-0486
A9R5	0698-3620	5	1	RESISTOR 100 5% 2W MO TC=0±200	28480	0698-3620
A9R6	0683-0335	2	1	RESISTOR 3 3 5% 25W FC TC=-400/+500	01121	CB33G5
A9R7	0757-0465	6	3	RESISTOR 100K 1% 125W F TC=0±100	24546	C4-1/8-TO-1003-F
A9R8	0683-2265	1	1	RESISTOR 22M 5% 25W FC TC=-900/+1200	01121	CB2265
A9R9	0757-0465	6		RESISTOR 100K 1% 125W F TC=0±100	24546	C4-1/8-TO-1003-F
A9R10	0684-1011	5	1	RESISTOR 100 10% 25W FC TC=-400/+500	01121	CB1011
A9R11	0757-0479	2	1	RESISTOR 392K 1% 125W F TC=0±100	19701	MF4C1/8-TO-3923-F
A9R12	0684-1021	7	4	RESISTOR 1K 10% 25W FC TC=-400/+600	01121	CB1021
A9R13	0687-2211	5	1	RESISTOR 220 10% 5W CC TC -0 +529	01121	EB2211
A9R14	0757-0442	9	3	RESISTOR 10K 1% 125W F TC=0+100	24546	C4-1/8-TO-1002-F
A9R15	0757-0274	5	1	RESISTOR 1.21K 1% 125W F TC=0±100	24546	C4-1/8-TO-1211-F
A9R16	0757-0442	9		RESISTOR 10K 1% 125W F TC=0±100	24546	C4-1/8-TO-1002-F
A9R17	0757-0442	9		RESISTOR 10K 1% 125W F TC=0±100	24546	C4-1/8-TO-1002-F
A9R18	0683-1555	0	3	RESISTOR 1 5M 5% 25W FC TC=-900/+1100	01121	CB1555
A9R19	0683-1555	0		RESISTOR 1 5M 5% 25W FC TC=-900/+1100	01121	CB1555
A9R20	0683-1555	0		RESISTOR 1 5M 5% 25W FC TC=-900/+1100	01121	CB1555

See introduction to this section for ordering information

Table 6-2. Replaceable Parts (Cont'd)

Reference Designator	HP Part Number	C D	Qty	Description	Mfr Code	Mfr Part Number
A9R21	0698-3161	9	1	RESISTOR 38 3K 1% 125W F TC=0+100	24546	C4-1/8-TO-3832-F
A9R22	0757-0475	8	1	RESISTOR 274K 1% 125W F TC=0+100	24546	C4-1/8-TO-2743-F
A9R23	0687-4721	6	1	RESISTOR 4 7K 10% 5W CC TC=0+647	01121	EB4721
A9R24	0698-8018	5	2	RESISTOR 30M 1% 3W C TC 0+100	03888	PVC175-3-TO-3004-F
A9R25	0687-3941	0	2	RESISTOR 390K 10% 5W CC TC=0+882	01121	EB3941
A9R26	0687-3941	0		RESISTOR 390K 10% 5W CC TC=0+882	01121	EB3941
A9R27	0698-8018	5		RESISTOR 30M 1% 3W C TC 0+100	03888	PVC175-3 TO 3004 F
A9R28	0684-1021	7		RESISTOR 1K 10% 25W FC TC -400 +600	01121	CB1021
A9R29	0757-0156	2	1	RESISTOR 1 5M 1% 5W F TC=0+100	28480	0757-0156
A9R30	2100-3626	8	1	RESISTOR TRMR 2M 20% C SIDE-ADJ 1-TRN	73138	72XR2M
A9R31	0699-0167	1	1	RESISTOR 20M 5% 1W C TC=0+250	28480	0699-0167
A9R32	0699-0904	4	4	RESISTOR 1 5K 10% 25W CC	28480	0699-0904
A9R33	0684-1061	5	2	RESISTOR 10M 10% 25W FC TC=900/+1100	01121	CB1061
A9R34	0699-0904	4		RESISTOR 1 5K 10% 25W CC	28480	0699-0904
A9R35	0699-0904	4		RESISTOR 1 5K 10% 25W CC	28480	0699-0904
A9R36	0699 0904	4		RESISTOR 1 5K 10% 25W CC	28480	0699 0904
A9R37	0757-0465	6	1	RESISTOR 100K 1% 125W F TC=0+100	24546	C4-1/8-TO-1003 F
A9R38	2100-3253	7	1	RESISTOR-TRMR 50K 10% C TOP-ADJ 1-TRN	28480	2100 3253
A9R39	0684-1061	5		RESISTOR 10M 10% 25W FC TC 900/+1100	01121	CB1061
A9R40	0684 1021	7		RESISTOR 1K 10% 25W FC TC= 400 +600	01121	CB1021
A9R41	0684-1021	7		RESISTOR 1K 10% 25W FC TC= 400/+600	01121	CB1021
A9R42	0684-6811	6	1	RESISTOR 680 10% 25W FC TC= 400/+600	01121	CB6811
				NOT ASSIGNED		
A9R44	0757-0342	8	1	RESISTOR 100K 1% 25W F TC=0±100	28546	C4-1-8/TO 1003 F
A9RT1	0837-0105	1	2	THERMISTOR BEAD 200K-OHM TC= 4 9% C-DEG	28480	0837-0105
A9RT1	0837-0105	1		THERMISTOR BEAD 200K-OHM TC=-4 9%/C-DEG	28480	0837-0105
A9T1	01311-61101	4	1	TRANSFORMER ASSEMBLY-HV	28480	01311 61101
A9U1	1826-0167	3	1	IC OP AMP PRGMBL TO-99	02735	CA3094AT
A9U2	1820-0217	2	1	IC OP AMP GP 8-DIP-P	28480	1820-0217
A9VR1	1902 3249	0	1	DIODE-ZNR 22 1V 2% DO 7 PD= 4W TC=+ 071%	28480	1902 3249
A9VR2	1902-3094	3	1	DIODE-ZNR 5 11V 2% DO 35 PD 4W	28480	1902 3094
A9VR3	1902-0041	4		DIODE-ZNR 5 11V 5% DO-7 PD= 4W TC= 009%	28480	1902-0041
A9VR4	1902-3381	1	2	DIODE-ZNR 68 1V 5% DO 7 PD= 4W TC=+ 079%	28480	1902-3381
A9VR5	1902-3381	1		DIODE-ZNR 68 1V 5% DO-7 PD 4W TC=+ 079%	28480	1902-3381
A9VR6	1902 0668	1	5	DIODE ZNR 200V 5% DO-15 PD=1W TC=+ 088%	28480	1902-0668
A9VR7	1902 0668	1		DIODE-ZNR 200V 5% DO 15 PD 1W TC=+ 088%	28480	1902-0668
A9VR8	1902-0668	1		DIODE-ZNR 200V 5% DO-15 PD=1W TC=+ 088%	28480	1902-0668
A9VR9	1902-0668	1		DIODE-ZNR 200V 5% DO-15 PD=1W TC + 088%	28480	1902-0668
A9VR10	1902-0668	1		DIODE-ZNR 200V 5% DO-15 PD=1W TC=+ 088%	28480	1902-0668
A9VR11	1902-0175	5	1	DIODE-ZNR 100V 5% DO-15 PD=1W TC=+ 083%	28480	1902-0175
A9VR12	1902-0597	5	1	DIODE-ZNR 56V 5% PD=1W	28480	1902-0597

See introduction to this section for ordering information

Table 6-2. Replaceable Parts (Cont'd)

Reference Designator	HP Part Number	C D	Qty	Description	Mfr Code	Mfr Part Number
A11	01310-66533	5	1	PC BOARD ASSEMBLY-LVPS	28480	01310-66533
A11C1	0160-3443	1	3	CAPACITOR-FXD 1μF +80-20% 50VDC CER	28480	0160-3443
A11C2	0160-3443	1		CAPACITOR-FXD 1μF +80-20% 50VDC CER	28480	0160-3443
A11C3	0180-0058	0	2	CAPACITOR-FXD 50μF +75-10% 25VDC AL	56289	30D506G025CC2
A11C4	0160-3443	1		CAPACITOR-FXD 1μF +80-20% 50VDC CER	28480	0160-3443
A11C5	0180-0058	0		CAPACITOR-FXD 50μF +75-10% 25VDC AL	56289	30D506G025CC2
A11C6	0160-0168	1	4	CAPACITOR-FXD 1μF ±10% 200VDC POLYE	28480	0160-0168
A11C7	0160-0168	1		CAPACITOR-FXD 1μF ±10% 200VDC POLYE	28480	0160-0168
A11C8	0160-0904	3	2	CAPACITOR-FXD 05μF ±20% 1KVDC CER	28480	0160-0904
A11C9	0160-0168	1		CAPACITOR-FXD 1μF ±10% 200VDC POLYE	28480	0160-0168
A11C10	0160-0168	1		CAPACITOR-FXD 1μF ±10% 200VDC POLYE	28480	0160-0168
A11C11	0160-0904	3		CAPACITOR-FXD 05μF ±20% 1KVDC CER	28480	0160-0904
A11CR1	1901-0030	9	4	DIODE-PWR RECT 800V 600MA DO-29	28480	1901-0030
A11CR2	1901-0030	9		DIODE-PWR RECT 800V 600MA DO-29	28480	1901-0030
A11CR3	1901-0030	9		DIODE-PWR RECT 800V 600MA DO-29	28480	1901-0030
A11CR4	1901-0030	9		DIODE PWR RECT 800V 600MA DO-29	28480	1901-0030
A11CR5	1901-0026	3	8	DIODE-PWR RECT 200V 750MA DO-29	28480	1901-0026
A11CR6	1901-0026	3		DIODE PWR RECT 200V 750MA DO-29	28480	1901-0026
A11CR7	1901-0026	3		DIODE-PWR RECT 200V 750MA DO-29	28480	1901-0026
A11CR8	1901-0026	3		DIODE-PWR RECT 200V 750MA DO-29	28480	1901 0026
A11CR9	1901-0026	3		DIODE PWR RECT 200V 750MA DO-29	28480	1901-0026
A11CR10	1901-0026	3		DIODE PWR RECT 200V 750MA DO-29	28480	1901-0026
A11CR11	1901 0026	3		DIODE PWR RECT 200V 750MA DO-29	28480	1901-0026
A11CR12	1901-0026	3		DIODE-PWR RECT 200V 750MA DO-29	28480	1901-0026
A11CR13	1901-0040	1	8	DIODE SWITCHING 30V 50MA 2NS DO-35	28480	1901-0040
A11CR14	1901-0040	1		DIODE SWITCHING 30V 50MA 2NS DO-35	28480	1901-0040
A11CR15	1901-0028	5	1	DIODE PWR RECT 400V 750MA DO-29	28480	1901-0028
A11CR16	1901-0040	1		DIODE SWITCHING 30V 50MA 2NS DO-35	28480	1901-0040
A11CR17	1901-0040	1		DIODE-SWITCHING 30V 50MA 2NS DO-35	28480	1901-0040
A11CR18	1901-0040	1		DIODE-SWITCHING 30V 50MA 2NS DO-35	28480	1901-0040
A11CR19	1901-0040	1		DIODE-SWITCHING 30V 50MA 2NS DO-35	28480	1901-0040
A11CR20	1901-0040	1		DIODE SWITCHING 30V 50MA 2NS DO-35	28480	1901 0040
A11CR21	1901-0040	1		DIODE-SWITCHING 30V 50MA 2NS DO-35	28480	1901-0040
A11F1	2110-0067	6	1	FUSE 3A 250V 1 25X 25UL	28480	2110-0067
A11F2	2110-0001	8	2	FUSE 1A 250V 1 25X 25UL	75915	312001
A11F3	2110-0001	8		FUSE 1A 250V 1 25X 25UL	75915	312001
A11Q1	1854-0234	4	2	TRANSISTOR NPN 2N3440 SI TO-5 PD=1W	0192B	2N3440
A11Q2	1854-0358	3	2	TRANSISTOR NPN SI PD=310MW FT=60MHZ	28480	1854-0358
A11Q3	1854-0358	3		TRANSISTOR NPN SI PD=310MW FT=60MHZ	28480	1854-0358
A11Q4	1854-0234	4		TRANSISTOR NPN 2N3440 SI TO-5 PD=1W	0192B	2N3440
A11Q5	1854-0071	7	2	TRANSISTOR NPN SI PD=300MW FT 200MHZ	28480	1854-0071
A11Q6	1854-0022	8	1	TRANSISTOR NPN SI TO-39 PD=700MW	07263	817843
A11Q7	1854 0071	7		TRANSISTOR NPN SI PD=300MW FT=200MHZ	28480	1854-0071
A11R1	0764-0027	1	1	RESISTOR 75K 5% 2W MO TC=±200	28480	0764-0027
A11R2	0811-1853	4	1	RESISTOR 25 5% 5W PW TC=±20	28480	0811-1853
A11R3	0764-0001	1	1	RESISTOR 6 2K 5% 2W MO TC=±200	28480	0764-0001
A11R4	0757-0388	2	3	RESISTOR 30 1 1% 125W F TC=±100	24546	C4-1/8-TO-30R1-F
A11R5	0757-0128	8	1	RESISTOR 200K 1% 5W F TC=±100	28480	0757-0128
A11R6	0757-0399	5	1	RESISTOR 82 5 1% 125W F TC=0+100	24546	C4-1/8-TO-82R5-F
A11R7	0757-0433	8	1	RESISTOR 3 32K 1% 125W F TC=0±100	24546	C4-1/8-TO-3321 F
A11R8	0757-0855	8	2	RESISTOR 68 1K 1% 5W F TC=0±100	28480	0757-0855
A11R9	0757-0855	8		RESISTOR 68 1K 1% 5W F TC=0+100	28480	0757-0855
A11R10	0757-0341	7	1	RESISTOR 30 1K 1% 25W F TC=0±100	24546	C5-1/4-TO-3012-F
A11R11	0698-6101	3	1	RESISTOR 40K .1% .5W F TC=0±50	28480	0-698-6101
A11R12	2100-2497	9	1	RESISTOR-TRMR 2K 10% C TOP-ADJ 1-TRN	28480	2100-2497
A11R13	0757-0857 *	0	1	RESISTOR 82.5K 1% .5W F TC=100	28480	0757-0857
A11R14	0757-0850	3	1	RESISTOR 39 2K 1% 5W F TC=0+100	28480	0757-0850
A11R15	0687-3321	0	2	RESISTOR 3 3K 10% 5W CC TC=0+647	01121	EB3321
A11R16	0698-3622	7	1	RESISTOR 120 5% 2W MO TC=0±200	28480	0698-3622
A11R17	0757-0446	3	1	RESISTOR 15K 1% 125W F TC=0±100	24546	C4-1/8-TO-1502-F
A11R18	0757-0388	2		RESISTOR 30 1 1% 125W F TC=0+100	24546	C4-1/8-TO-30R1-F
A11R19	0757-0352	0	1	RESISTOR 150K 1% 5W F TC=0±100	28480	0757-0352
A11R20	0757-0344	0	1	RESISTOR 1M 1% 25W F TC=0±100	24546	C5-1/4-TO-1004-F
A11R21	0757-0434	9	1	RESISTOR 3 65K 1% 125W F TC=0+100	24546	C4-1/8-TO-3651-F
A11R22	0698-3152	8	1	RESISTOR 3 48K 1% 125W F TC=0±100	24546	C4-1/8-TO-3481-F
A11R23	0687-3321	0		RESISTOR 3 3K 10% 5W CC TC=0±100	01121	EB3321
A11R24	0757-0440	7	1	RESISTOR 7 5K 1% 125W F TC=0+100	24546	C4-1/8-TO-7501-F
A11R25	0757-0388	2		RESISTOR 30 1 1% 125W F TC=0±100	24546	C4-1/8-TO-30R1-F
A11R26	0757-0737	5	1	RESISTOR 1 62K 1% 25W F TC=0±100	24546	C5-1/4-TO-1621-F
A11R27	0757-0458	7	1	RESISTOR 51 1K 1% 125W F TC=0+100	24546	C4-1/8-TO-5112-F
A11R28	0698-3150	6	1	RESISTOR 2 37K 1% 125W F TC=0±100	24546	C4-1/8-TO-2371-F
A11R29	2100-2061	3	1	RESISTOR-TRMR 200 10% C TOP-ADJ 1-TRN	73138	62PR200
A11R30	0757-1094	9	1	RESISTOR 1 47K 1% 125W F TC=0±100	24546	C4-1/8-TO-1471-F

See introduction to this section for ordering information

Table 6-2. Replaceable Parts (Cont'd)

Reference Designator	HP Part Number	C D	Qty	Description	Mfr Code	Mfr Part Number
A11R31	0767-0009	5	2	RESISTOR 12K 5% 3W MO TC=0±250	27167	PP3-3-250-1202-J
A11R32	0767-0009	5		RESISTOR 12K 5% 3W MO TC=0±250	27167	PP3-3 250-1202-J
A11R33	0684-3321	4	2	RESISTOR 3 3K 10% 25W FC TC=-400/+700	01121	CB3321
A11R34	0684-3321	4		RESISTOR 3 3K 10% 25W FC TC=-400/+700	01121	CB3321
A11R35	0767-0008	4	2	RESISTOR 10K 5% 3W MO TC=0±250	27167	FP3-3-250-1002-J
A11R36	0767-0008	4		RESISTOR 10K 5% 3W MO TC=0±250	27167	FP3-3-250-1002-J
A11V1	1940-0027	6	1	TUBE-ELECTRON DIODE-V RGLTR	28480	1940-0027
A11VR1	1902-0175	5	1	DIODE-ZNR 100V 5% DO-15 PD=1W TC=+.083%	28480	1902 0175
A11VR2	1902-0049	2	1	DIODE-ZNR 6 19V 5% DO-7 PD= 4W TC=+.022%	28480	1902-0049
A11VR3	1902-0065	2	1	DIODE-ZNR 46 4V 10% DO-7 PD= 4W	28480	1902-0065
A11VR4	1902-3393	5	1	DIODE ZNR 75V 5% DO-7 PD= 4W TC=+.077%	28480	1902-3393
A11VR5	1902-0033	4	1	DIODE-ZNR 1N823 6 2V 5% DO-7 PD= 4W	24046	1N823
A11VR6	1902-0185	7	1	DIODE-ZNR 27 4V 5% DO-7 PD= 4W TC=+.079%	28480	1902-0185
A11XF1	2110-0269	0	6	FUSEHOLDER-CLIP TYPE 25D-FUSE	28480	2110-0269
A11XF2	2110-0269	0		FUSEHOLDER-CLIP TYPE 25D-FUSE	28480	2110-0269
A11XF3	2110-0269	0		FUSEHOLDER-CLIP TYPE 25D-FUSE	28480	2110-0269
A11MP1	1205-0095	0	1	HEAT SINK SGL TO-5/TO-39-CS	28480	1205-0095
A12	0960-0444	2	1	POWER INPUT MODULE	28480	0960-0444
A13	01311-66503	0	1	BOARD ASSEMBLY-CONTROL	28480	01311 66503
A13R1	2100-3838	4	1	RESISTOR-VAR 1K ±20% 1W LIN	28480	2100-3838
A13R2	2100-3839	5	7	RESISTOR-VAR 5K ±20% 1W LIN	28480	2100-3839
A13R3	2100-3839	5		RESISTOR-VAR 5K ±20% 1W LIN	28480	2100-3839
A13R4	2100-3839	5		RESISTOR-VAR 5K ±20% 1W LIN	28480	2100-3839
A13R5	2100-3839	5		RESISTOR-VAR 5K ±20% 1W LIN	28480	2100-3839
A13R6				NOT ASSIGNED		
A13R7	2100-3839	5		RESISTOR-VAR 5K ±20% 1W LIN	28480	2100-3839
A13R8	2100-3839	5		RESISTOR-VAR 5K ±20% 1W LIN	28480	2100-3839
A13R9	2100-3839	5		RESISTOR-VAR 5K ±20% 1W LIN	28480	2100 3839
A13R10	0687-1001	9	1	RESISTOR 10 10% 5W CC TC=0+412	01121	EB1001
A14	01310-66513	1	1	PC BOARD ASSEMBLY-EXTENDER	28480	01310-66513
A15	01311-68710	5	1	TILT STAND	28480	01311-68710
				OPTION 001		
A16	01311-68701	4	1	RACK MOUNT KIT (IN LIEU OF TILT STAND)	28480	01311-68701
				OPTION 002		
A17	01311-68712	7	1	SHORT TILT STAND	28480	1311 68712
				OPTION 004		
	01311-66507	0	1	CONTRAST FILTER KIT	28480	01311-66507
	01311-68713	8	1	PANEL MASK ASSY	28480	01311-68713
	01311-68701	4	1	RACK MOUNT KIT IN (LIEU OF TILT STAND)	28480	01311-68701
				OPTION 330		
FL1	9135-0046		-1	LINE FILTER (DELETED)		
MP46	7120-4190	0	1	WARNING TAG	28480	7120-4190
W1	8120-1992	5	1	POWER CORD	28480	8120 1992
				OPTION 604		
	5083-3261	2	1	CRT-P4	28480	5083-3261
				OPTION 639		
	5083-3270	3	1	CRT-P39	28480	5083-3270
				OPTION 900		
W1	8120-1351		1	POWER CORD - 250V UNITED KINGDON	28480	8120-1351
				OPTION 901		
W1	8120-1369		1	POWER CORD - 250V AUSTRALIA-NEW ZEALAND	28480	8120-1369
				OPTION 902		
W1	8120-2857		1	POWER CORD - 250V EUROPEAN CONTINENT	28480	8120 2857
				OPTION 904		
W1	8120-0698		1	POWER CORD - 250V USA CANADA	28480	8120-0698
				OPTION 906		
W1	8120-2104		1	POWER CORD - SWITZERLAND	28480	8120 2104
				OPTION 912		
W1	8120-2956		1	POWER CORD - 220V DENMARK	28480	8120-2956

See introduction to this section for ordering information

Table 6-3. List of Manufacturers' Codes

Mfr Code	Manufacturer Name	Address		Zip Code
00000	NO M/F DESCRIPTION FOR THIS MFG NUMBER			
01121	ALLEN BRADLEY CO	MILWAUKEE	WI	53212
01295	TEXAS INSTR INC SEMICOND CMPNT DIV	DALLAS	TX	75231
02735	RCA CORP SOLID STATE DIV	SOMERVILLE	NJ	08876
03508	GENERAL ELECTRIC CO SEMI-CONDUCTOR PRODUCTS	AUBURN	NY	13021
03888	PYROFILM CORP	WHIPPANY	NJ	07981
04713	MOTOROLA SEMICONDUCTOR PRODUCTS	PHOENIX	AZ	85008
07263	FAIRCHILD SEMICONDUCTOR DIV	MOUNTAIN VIEW	CA	94040
19701	MEPCO/ELECTRIC CORP	MINERAL WELLS	TX	76067
24546	CORNING GLASS WORKS (BRADFORD)	BRADFORD	PA	14070
27167	CORNING GLASS WORKS	WILMINGTON	NC	28401
28480	HEWLETT PACKARD CO CORPORATE HQ	PALO ALTO	CA	94304
30983	MEPCO/ELECTRA INC	SAN DIEGO	CA	92121
56289	SPRAGUE ELECTRIC CO	NORTH ADAM	MA	01247
71400	BUSSMAN MFG DIV OF MCGRAM EDISON CO	ST LOUIS	MO	63017
72136	ELECTRO MOTIVE MFG CO INC	WILLIMANTIC	CT	06226
72982	ERIE TECHNOLOGICAL PRODUCTS INC	ERIE	PA	16512
73138	BECKMAN INSTR INC HELIPOT DIV	FULLERTON	CA	92634
75915	LITTLEFUSE INC	DES PLAINS	IL	60016
84411	TRW CAPACITOR DIVISION	OGALLALA	NE	69153

SECTION VII

MANUAL CHANGES

7-1. INTRODUCTION.

7-2. This section contains information for adapting this manual to instruments for which the content does not apply directly.

7-3. MANUAL CHANGES.

7-4. To adapt this manual to your instrument, refer to Table 7-1 and make all manual changes listed for your instrument serial prefix number. Make these changes in the sequence listed. If your instrument serial prefix is not listed on the title page of this manual, or in Table 7-1, it may be documented in a yellow MANUAL CHANGES supplement. For additional information about serial number coverage, refer to INSTRUMENTS COVERED BY MANUAL in Section I.

Table 7-1. Manual Changes by Serial Prefix Number.

Serial Prefix Number	Make Manual Changes
1943A	4, 3, 2, 1
2140A	4, 3, 2
2211A	4, 3
2226A	4

7-5. MANUAL CHANGE INSTRUCTIONS

CHANGE 1

SECTION I. GENERAL INFORMATION
Table 1-1. Under TTL BLANKING, delete the reference to reversible polarity. Delete BINARY GRAY SHADE...
Table 1-4. Delete the requirement for the Binary Z-Input Cable.

SECTION III. OPERATION
Paragraph 3-4. Delete the reference to binary gray shade control.
Figure 3-1. Delete reference to the Z-AXIS GRAY SHADE INPUT (18).
Paragraph 3-13. Delete the last two sentences refering to reversal of TTL Blanking polarity.
Delete paragraph 3-14 and Table 3-1.
Delete paragraph 3-15. Option 003 is covered in special documentation.
Delete Figures 3-6 and 3-7.

SECTION V. ADJUSTMENTS
Place pages 7-5 and 7-6 into SECTION V as pages 5-8a and 5-8b.

SECTION VI. REPLACEABLE PARTS
Place pages 7-7 through 7-10 into SECTION VI as pages 6-18a through 6-18d.

SECTION VIII. SERVICE
Place pages 7-11 and 7-12 into SECTION VIII as pages 8-8a and 8-8b.

CHANGE 2

Table 6-2. Replaceble Parts.
Delete: FL1, FILTER-POWER LINE INPUT, 9135-0046.
Change: T1, TRANSFORMER-POWER, HP and Mfr Part No. to 9100-2665 CD7.
This part is unavailable but is directly replaced by the part presently in use (9100-4254).

Page 8-15, Schematic 7.
Change: Schematic 7 per Figure 7-1.

Page 8-17, Schematic 8.
Delete: FL1 in primary power circuitry.

CHANGE 3

Table 6-2. Replaceable Parts.
Change: A5, HP and Mfr Part No. to 01311-66505 CD2.
Change: A5R12, HP and Mfr Part No. to 0757-0288 CD1 QTY1, RESISTOR 9.09K 1% .125W.
Change: A5R18, HP and Mfr Part No. to 0698-3151 CD7 QTY1, RESISTOR 2.87K 1% .125W.
Change: A5R25, HP and Mfr Part No. to 0757-0290 CD5 QTY2, RESISTOR 6.19K 1% .125W.
Change: A5R26, HP and Mfr Part No. to 0757-0290 CD5 RESISTOR 6.19K 1% .125W.
Change: A5R33, HP and Mfr Part No. to 0757-0274 CD5 QTY2, RESISTOR 1.21K 1% .125W.
Change: A5R34, HP and Mfr Part No. to 0757-0274 CD5 RESISTOR 1.21K 1% .125W.
Change: A5R37, HP and Mfr Part No. to 0757-0420 CD3 QTY1, RESISTOR 750 1% .125W.
Change: A5R43, HP and Mfr Part No. to 0757-0444 CD1 QTY2, RESISTOR 12.1K 1% .125W.
Change: A5R45, HP and Mfr Part No. to 0757-0283 CD6 QTY2, RESISTOR 2K 1% .125W.
Change: A5R50, HP and Mfr Part No. to 0757-0455 CD4 QTY1, RESISTOR 36.5K 1% .125W.
Delete: A5R89 and A5R90.

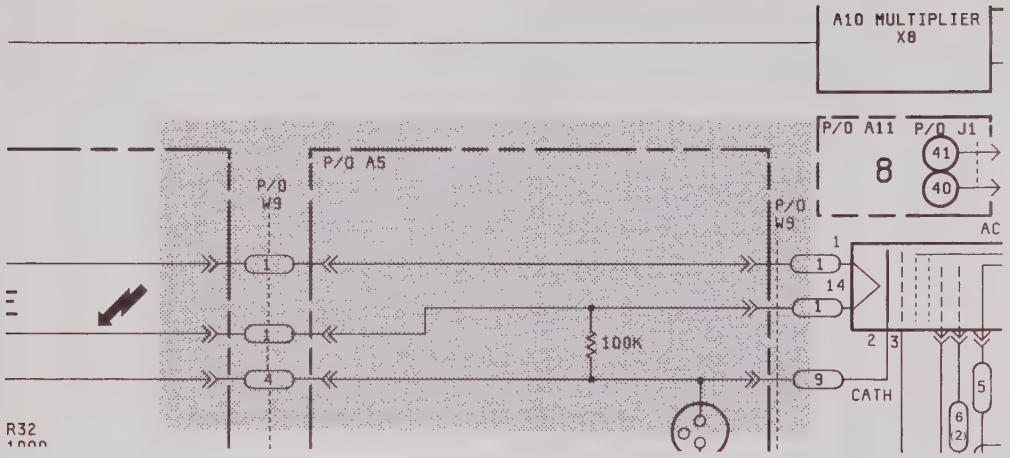

Figure 7-1. Changes to Schematic 7, page 8-15.

Service Sheet 4, Z-Axis Amplifier, page 8-9.
From left to right:
Delete: R89, replace with a line.
Change: R12 to 9090.
Change: R18 to 2870.
Change: R25 and R26 to 6190.
Change: R33 and R34 to 1210.
Change: R37 to 750.
Delete: R90, replace with a line.
Change: R43 to 12.1K.
Change: R45 to a fixed resistor, 2000 ohms.
Change: R50 to 36.5K.

CHANGE 4

Table 6-2. Replaceable Parts.
Change: A9, HP and Mfr Part No. to 01311-66504 CD1 (TWO PLACES).
Add: A9C26, Hp and Mfr Part No. 0180-0094 CD4 QTY2 CAPACITOR-FXD 100UF +75-10% 25VDC AL.
Add: A9C27, Hp and Mfr Part No. 0180-0094 CD4 QTY0 CAPACITOR-FXD 100UF +75-10% 25VDC AL.
Change: A9CR1, QTY to 5.
Add: A9CR6, CR17, and CR18 Same as A9CR1 except QTY is blank.
Change: A9R14, HP and Mfr Part No. to 0757-0273 CD4 QTY1, RESISTOR 3.01K 1% .125W.
Change: A9R15, HP and Mfr Part No. to 0757-0440 CD7 QTY1, RESISTOR 7.5K 1% .125W.
Change: A9R16, QTY to 2.
Add: A9R43, HP and Mfr Part No. to 0757-0446 CD3 QTY1, RESISTOR 15K 1% .125W.

Page 8-14, A9 Component Locator.
Change: Add or change per Figure 7-2 (C26, C27,CR6, CR17, CR18, R14, R15, R43).

Page 8-15, Schematic 7.
Change: Add or change circuitry per Figure 7-3 (C11, C26, C27, CR6, CR17, CR18, R14, R15, R43).

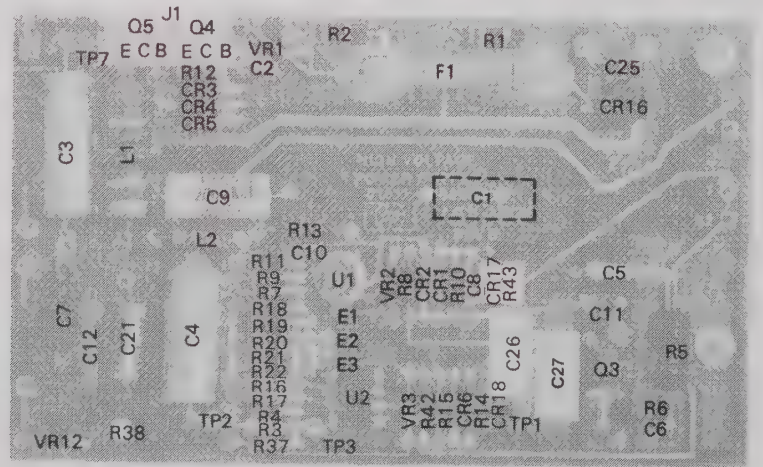

Figure 7-2. Changes to A9 Component Locator, page 8-14.

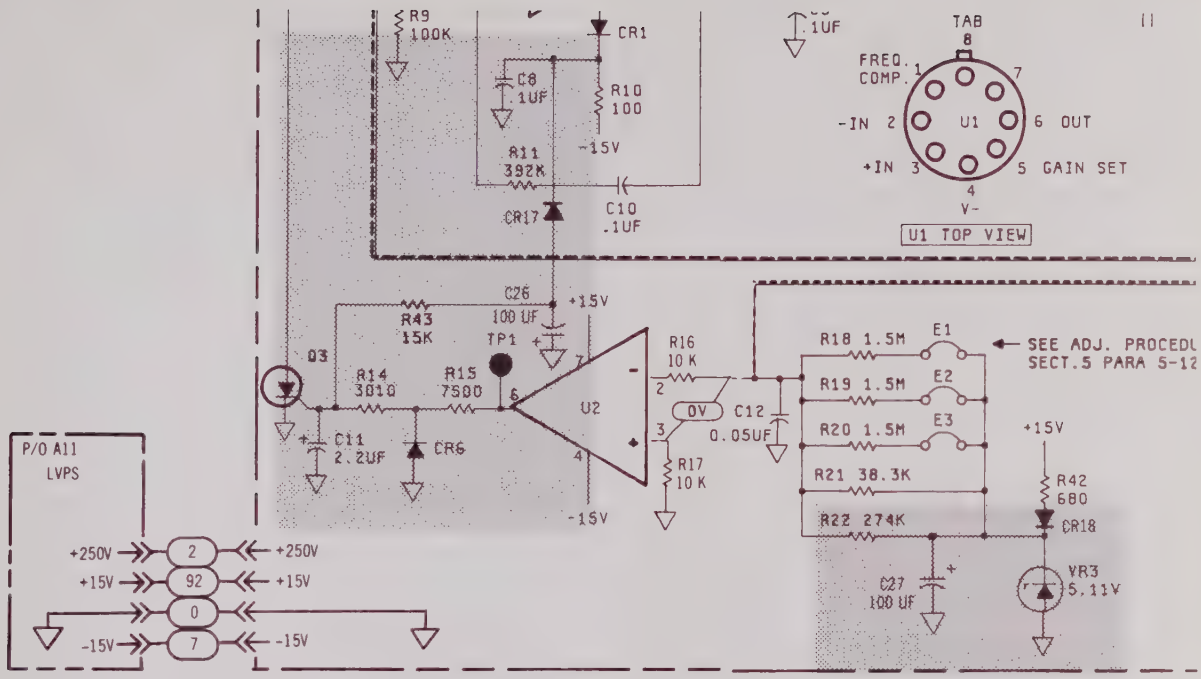

Figure 7-3. Changes to Schematic 7, page 8-15.

ADJUSTMENTS

5-13. Z-AXIS BALANCE ADJUSTMENTS.

REFERENCE:
Service Sheet 4.

DESCRIPTION:
The Z-axis amplifier balance (A5R13) is adjusted so that there is a 3 V increase in Z-axis amplifier output as the front panel INTENSITY control is rotated from minimum to maximum.

EQUIPMENT:
Digital Voltmeter

PROCEDURE:

a. Remove power and turn off phosphor protect switch (A8S1).

b. Disable high voltage oscillator by removing A9F1.

c. Preset all adjustments on the Z-axis board (A5) to midrange and the front-panel INTENSITY control fully CCW.

d. Apply power to the display.

e. Adjust Z-axis offset (A5R19) for approximately 20 V at the Z-axis output (A5TP1).

f. Monitor the Z-axis output (A5TP1) with the digital voltmeter and rotate the front panel INTENSITY control to minimum (fully ccw).

g. Adjust the Z-axis balance (A5R13) such that a 3 V increase is noted at the Z-axis output (A5TP1) as the front panel INTENSITY control is rotated from minimum to maximum.

NOTE

The amplifier offset will change when the balance is adjusted. After each balance adjustment recheck the Z-axis output voltage change by varying the front panel INTENSITY from minimum to maximum setting.

5-14. Z-AXIS GAIN, OFFSET, AND INTENSITY LIMIT ADJUSTMENTS.

REFERENCE:
Service Sheet 4.

DESCRIPTION:
The intensity limit and offset adjustments provide proper CRT grid bias as defined by the CRT cutoff voltage. The gain adjustment provides the proper CRT grid drive as defined by the CRT cutoff voltage.

EQUIPMENT:
Monitor Oscilloscope
Pulse Generator
Digital Voltmeter
Low Capacitance 50:1 Divider Probe

PROCEDURE:

a. Readjust Z-axis offset (A5R19) for 20 V at the Z-axis output (A5TP1).

b. Set intensity limit (A9R38) for maximum voltage at A9C21.

c. Turn off power and enable high voltage oscillator by replacing A9F1.

d. Apply power and adjust intensity limit (A9R38) for a dimly visable dot on the screen.

e. Record the voltage at A9C21 and the Z-axis output (A5TP1). The difference between the two voltages is the CRT cutoff voltage.

$$\text{CRT cutoff voltage} = V_{\text{at A9C21}} - V_{\text{at A5TP1}}$$

f. Position the beam off-screen and apply a 10 kHz +1 V, 1 microsecond wide (1% duty cycle) pulse to the Z-INPUT.

g. Set front panel INTENSITY control (A13R1) fully cw and monitor the Z-axis output (A5TP1) with the monitor oscilloscope (use 50:1 divider probe).

h. Adjust the Z-axis gain (A5R14) and Z-axis offset (A5R19) for a peak-to-peak amplitude signal equal to 75% of the CRT cutoff voltage or 47 V, whichever is less (see step e for CRT cutoff voltage).

i. Adjust Z-axis offset (A5R19) such that the positive position of the pulse is just equal to the maximum Z-axis output, maintaining the same peak-to-peak amplitude obtained in step h (see figure 5-5).

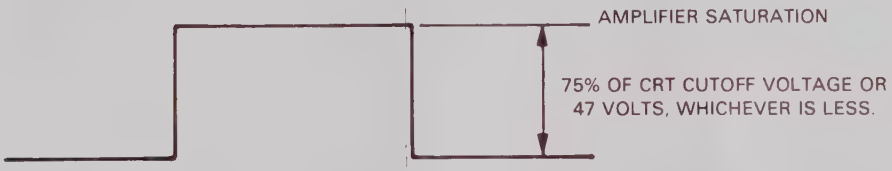

Figure 7-4. Z-axis Gain and Offset Adjustment

j. Apply 10 kHz, a 1 V p-p, 1 microsecond wide (1% duty cycle) pulse having a -1 V base line to the Z-axis INPUT. Position the beam on-screen and rotate the front panel INTENSITY control to minimum. Adjust the intensity limit (A9R38) for a visible, low intensity dot on the screen. Rotation of the front panel INTENSITY control towards maximum, or removal of the Z-axis input signal should produce a brighter dot. If not, recheck gain, offset, and balance adjustments.

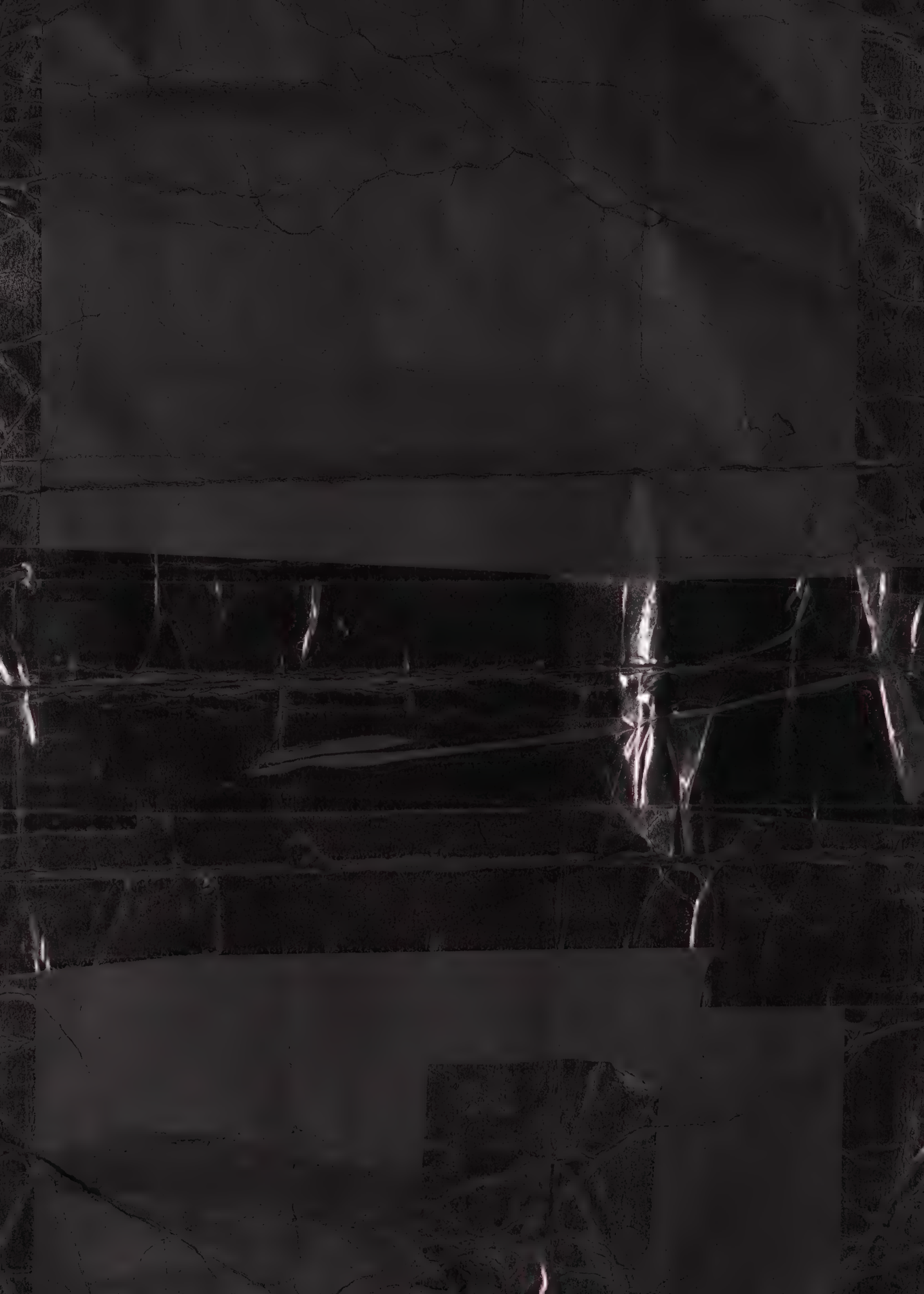

ADJUSTMENTS

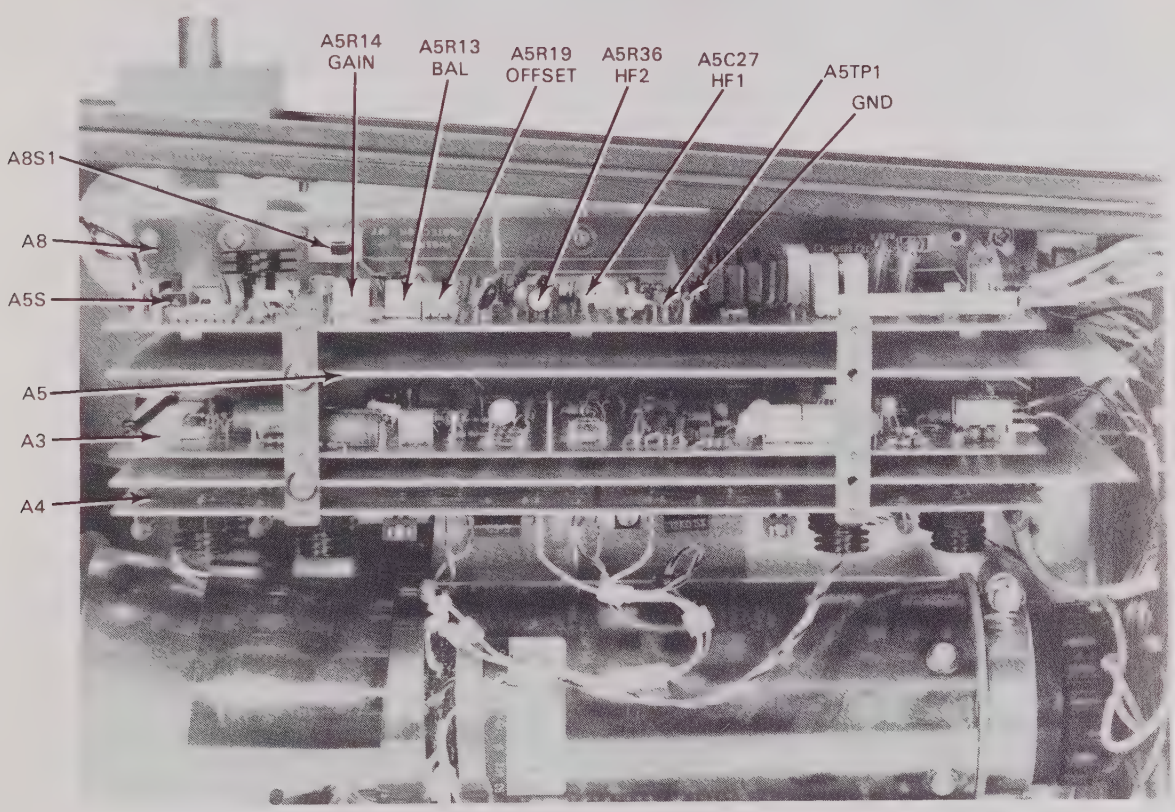

Figure 7-5. Z-axis Amplifier Adjustment Locations

Table 7-2. Z-axis Amplifier Adjustments

Reference Designator	Adjustment Name	Adjustment Paragraph	Service Sheet	Description
A5R19	Z-AXIS OFFSET	5-13	4	Adjust Z-OFFSET for 20 V output at Z-AXIS output (A5TP1)
A5R13	Z-AXIS BALANCE	5-13	4	Adjust for 3 V increase at Z-AXIS output when intensity control is turned from minimum to maximum
A9R38	INTENSITY LIMIT	5-14	7	Adjust for dimly visible dot on screen with INTENSITY at minimum and 1 V p-p at Z-AXIS input
A5R14	Z-AXIS GAIN	5-14	4	Adjust to 75% of CRT cutoff or +47 V whichever is less (monitor at A5TP1)
A5R19	Z-AXIS OFFSET	5-14	4	Adjust so that positive portion of pulse is equal to maximum Z-AXIS output (monitor at A5TP1)
A5C27 A5R36	Z-AXIS HF1 Z-AXIS HF2	5-15	4	Adjust for pulse rise time of ≤25 ms

REPLACEMENT Z-AXIS ADJUSTMENT PROCEDURES FOR SERIAL PREFIX 1943A

(Backdate as page 5-8b)

Table 7-3. Replaceable Parts

Reference Designation	HP Part Number	CD	Qty	Description	Mfr Code	Mfr Part Number
A5	01311-66502	9	1	Z-AXIS BOARD ASSEMBLY	28480	01311-66502
A5C1	0160-2055	9	16	CAPACITOR-FXD .01UF +80-20% 100VDC CER	28480	0160-2055
A5C2	0160-2055	9		CAPACITOR-FXD .01UF +80-20% 100VDC CER	28480	0160-2055
A5C3	0160-2243	7	4	CAPACITOR-FXD 2.7PF +-.25PF 500VDC CER	28480	0160-2243
A5C4	0160-2055	9		CAPACITOR-FXD .01UF +80-20% 100VDC CER	28480	0160-2055
A5C5	0160-3508	9	4	CAPACITOR-FXD 1UF +80-20% 50VDC CER	28480	0160-3508
A5C6	0160-3508	9		CAPACITOR-FXD 1UF +80-20% 50VDC CER	28480	0160-3508
A5C7	0160-2243	7		CAPACITOR-FXD 2.7PF +-.25PF 500VDC CER	28480	0160-2243
A5C8	0160-2055	9		CAPACITOR-FXD .01UF +80-20% 100VDC CER	28480	0160-2055
A5C9	0160-2055	9		CAPACITOR-FXD .01UF +80-20% 100VDC CER	28480	0160-2055
A5C10	0160-3443	1	5	CAPACITOR-FXD .1UF +80-20% 50VDC CER	28480	0160-3443
A5C11	0160-2055	9		CAPACITOR-FXD .01UF +80-20% 100VDC CER	28480	0160-2055
A5C12	0160-2243	7		CAPACITOR-FXD 2.7PF +-.25PF 500VDC CER	28480	0160-2243
A5C13	0160-2243	7		CAPACITOR-FXD 2.7PF +-.25PF 500VDC CER	28480	0160-2243
A5C14	0160-2055	9		CAPACITOR-FXD .01UF +80-20% 100VDC CER	28480	0160-2055
A5C15	0160-2055	9		CAPACITOR-FXD .01UF +80-20% 100VDC CER	28480	0160-2055
A5C16	0140-0203	3	2	CAPACITOR-FXD 30PF +-5% 500VDC MICA	72136	DM15E300J0500WV1CR
A5C17	0140-0203	3		CAPACITOR-FXD 30PF +-5% 500VDC MICA	72136	DM15E300J0500WV1CR
A5C18	0160-2055	9		CAPACITOR-FXD .01UF +80-20% 100VDC CER	28480	0160-2055
A5C19	0160-2055	9		CAPACITOR-FXD .01UF +80-20% 100VDC CER	28480	0160-2055
A5C20	0160-2055	9		CAPACITOR-FXD .01UF +80-20% 100VDC CER	28480	0160-2055
A5C21	0160-2055	9		CAPACITOR-FXD .01UF +80-20% 100VDC CER	28480	0160-2055
A5C22	0160-4908	5	3	CAPACITOR-FXD .68UF +-10% 250VDC	28480	0160-4908
A5C23	0160-3460	2	2	CAPACITOR-FXD .05UF +80-20% 100VDC CER	28480	0160-3460
A5C24	0160-3460	2		CAPACITOR-FXD .05UF +80-20% 100VDC CER	28480	0160-3460
A5C25	0160-4908	5		CAPACITOR-FXD .68UF +-10% 250VDC	28480	0160-4908
A5C26	0160-4908	5			28480	0160-4908
A5C27	0121-0474	0	1	CAPACITOR-FXD 68UF +-10% 250VDC	28480	0121-0474
A5C28	0160-3960	7	1	CAPACITOR-FXD .68UF +-10% 250VDC	28480	0160-3960
A5C29	0160-2055	9		CAPACITOR-V TRMR-PSTN 0.25 - 1.25PF 600V	28480	0160-2055
A5C30	0160-3443	1		CAPACITOR-FXD .1UF +80-20% 50VDC CER	28480	0160-3443
A5C31	0180-0374	3	2	CAPACITOR-FXD 10UF+-10% 20VDC TA	56289	150D106X902082
A5C32	0160-3443	1		CAPACITOR-FXD .1UF +80-20% 50VDC CER	28480	0160-3443
A5C33	0180-0374	3		CAPACITOR-FXD 10UF+-10% 20VDC TA	56289	150D106X902082
A5C34	0160-3443	1		CAPACITOR-FXD .1UF +80-20% 50VDC CER	28480	0160-3443
A5C35	0160-3508	9		CAPACITOR-FXD 1UF +80-20% 50VDC CER	28480	0160-3508
A5C36	0160-3508	9		CAPACITOR-FXD 1UF +80-20% 50VDC CER	28480	0160-3508
A5C37	0160-3443	1		CAPACITOR-FXD .1UF +80-20% 50VDC CER	28480	0160-3443
A5C38	0160-2055	9		CAPACITOR-FXD .01UF +80-20% 100VDC CER	28480	0160-2055
A5C39	0160-2055	9		CAPACITOR-FXD .01UF +80-20% 100VDC CER	28480	0160-2055
A5C41	0160-2055	9		CAPACITOR-FXD .01UF +80-20% 100VDC CER	28480	0160-2055
A5CR1	1901-0376	6	4	DIODE-GEN PRP 35V 50MA DO-35	28480	1901-0376
A5CR2	1901-0376	6		DIODE-GEN PRP 35V 50MA DO-35	28480	1901-0376
A5CR3	1901-0376	6		DIODE-GEN PRP 35V 50MA DO-35	28480	1901-0376
A5CR4	1901-0376	6		DIODE-GEN PRP 35V 50MA DO-35	28480	1901-0376
A5CR5	1906-0042	3	1	DIODE-DUAL 70V VF DIFF≤10MV	28480	1906-0042
A5CR6	1901-0040	1	3	DIODE-SWITCHING 30V 50MA 2NS DO-35	28480	1901-0040
A5CR7	1901-0045	6	2	DIODE-PWR RECT 100V 750MA DO-29	28480	1901-0045
A5CR8	1901-0045	6		DIODE-PWR RECT 100V 750MA DO-29	28480	1901-0045
A5CR9	1901-0040	1		DIODE-SWITCHING 30V 50MA 2NS DO-35	28480	1901-0040
A5CR10	1901-0040	1		DIODE-SWITCHING 30V 50MA 2NS DO-35	28480	1901-0040
A5CR11	1901-0050	3	2	DIODE-SWITCHING 80V 200MA 2NS DO-35	28480	1901-0050
A5CR12	1901-0050	3		DIODE-SWITCHING 80V 200MA 2NS DO-35	28480	1901-0050
	1251-0206	2	2	CONNECTOR-SGL CONT SKT .04-IN-BSC-SZ RND	28480	1251-0206
A5L1	9140-0210	1	2	COIL-MLD 100UH 5% Q=50 .155DX.375LG-NOM	28480	9140-0210
A5L2	9140-0210	1		COIL-MLD 100UH 5% Q=50 .155DX.375LG-NOM	28480	9140-0210
A5MP1	1205-0213	4	1	HEAT SINK SGL TO=5/TO=39=CS	28480	1205-0213
A5MP2	1205-0235	0	1	HEAT SINK SGL TO=18=CS	28480	1205-0235
A5MP3	01300-21102	8	1	HEAT SINK=CLAMP	28480	01300-21102
A5MP4	01300-21103	9	1	HEAT SINK=BASE	28480	01300-21103
A5MP5	1205-0226	9	1	HEAT SINK SGL TO=5/TO=39=CS	28480	1205-0226
A5Q1	1855-0262	0	1	TRANSISTOR=JFET DUAL N=CHAN D=MODE SI	28480	1855-0262
A5Q2	1853-0316	1	2	TRANSISTOR=DUAL PNP PD=500MW	28480	1853-0316
A5Q3	1854-0280	0	1	TRANSISTOR=DUAL NPN PD=400MW	28480	1854-0280
A5Q5	1854-0260	6	1	TRANSISTOR NPN 2N3227 SI TO=18 PD=360MW	04713	2N3227
A5Q6	1853-0089	5	1	TRANSISTOR PNP 2N4917 SI PD=200MW	07263	2N4917
A5Q7	1853-0232	0	1	TRANSISTOR PNP SI TO=39 PD=1W FT=200MHZ	28480	1853-0232
A5Q8	1854-0419	7	2	TRANSISTOR NPN SI TO=39 PD=1W FT=200MHZ	28480	1854-0419
A5Q9	1853-0316	1		TRANSISTOR=DUAL PNP PD=500MW	28480	1853-0316
A5Q10	1854-0221	9	1	TRANSISTOR=DUAL NPN PD=750MW	28480	1854-0221
A5Q11	1854-0419	7		TRANSISTOR NPN SI TO=39 PD=1W FT=200MHZ	28480	1854-0419

REPLACEMENT Z-AXIS PARTS LIST FOR SERIAL PREFIX 1943A

(Backdate as page 6-18a)

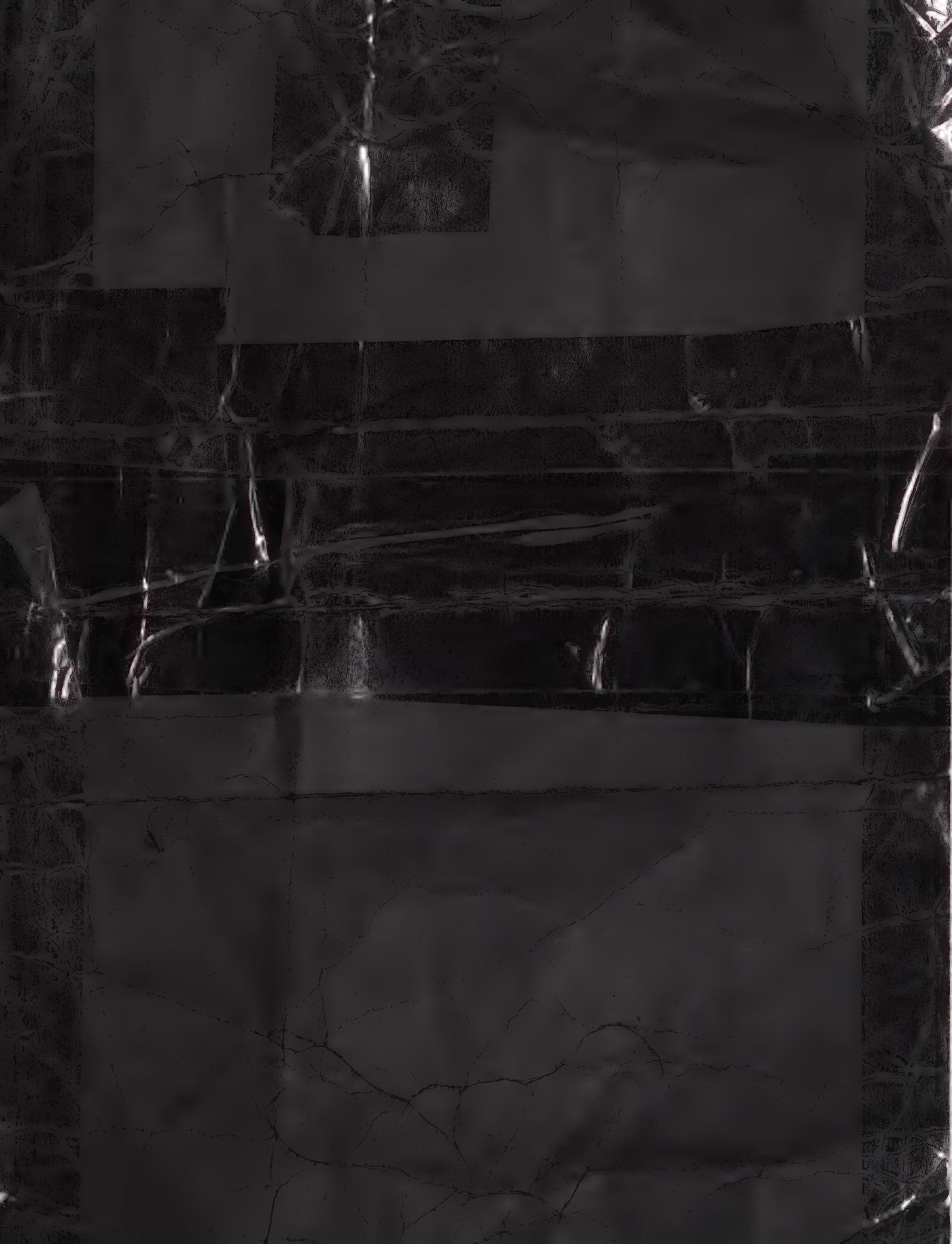

5-15. Z-AXIS PULSE RESPONSE.

REFERENCE:
Service Sheet 4

DESCRIPTION:
The high frequency response adjustments (A5C27, A5R36) trim the Z-axis amplifier pulse response for a fast rise time consistent with minimum overshoot (rise time = ≤25 microseconds, overshoot typically is ≤5%).

EQUIPMENT:
Monitor Oscilloscope
Pulse Generator
Low Capacitance 50:1 Divider Probe

PROCEDURE:

a. Position beam off-screen and apply 10 kHz, a +1 V, 1 microsecond wide (1% duty cycle) pulse to the Z-axis INPUT.

b. Set front panel INTENSITY CCW.

c. Connect the monitor oscilloscope to the Z-axis output (A5TP1). Use the 50:1 divider probe.

d. Monitor the oscilloscope and adjust HF1 (A5C27) and HF2 (A5R36) to obtain a pulse of ≤25 nanosecond rise time with minimum perturbations (±5% typical).

Table 7-3. Replaceable Parts (Cont'd)

Reference Designation	HP Part Number	C D	Qty	Description	Mfr Code	Mfr Part Number
A5R1	0757-0442	9	4	RESISTOR 10K 1% .125W F TC=0+-100	24546	C4-1/8-T0-1002-F
A5R2	0698-7648	5	1	RESISTOR 50 1% .25W MO TC=0+-100	28480	0698-7648
A5R3	0757-0391	7	4	RESISTOR 39.2 1% .125W F TC=0+-100	24546	C4-1/8-T0-39R2-F
A5R4	0757-0391	7		RESISTOR 39.2 1% .125W F TC=0+-100	24546	C4-1/8-T0-39R2-F
A5R5	0757-0288	1	2	RESISTOR 9.09K 1% .125W F TC=0+-100	19701	MF4C1/8-T0-9091-F
A5R6	0757-0288	1		RESISTOR 9.09K 1% .125W F TC=0+-100	19701	MF4C1/8-T0-9091-F
A5R7	0757-0415	6	2	RESISTOR 475 1% .125W F TC=0+-100	24546	C4-1/8-T0-475R-F
A5R8	0757-0415	6		RESISTOR 475 1% .125W F TC=0+-100	24546	C4-1/8-T0-475R-F
A5R9	0757-0431	6	1	RESISTOR 2.43K 1% .125W F TC=0+-100	24546	C4-1/8-T0-2431-F
A5R10	0757-0418	9	1	RESISTOR 619 1% .125W F TC=0+-100	24546	C4-1/8-T0-619R-F
A5R11	0757-0434	9	1	RESISTOR 3.65K 1% .125W F TC=0+-100	24546	C4-1/8-T0-3651-F
A5R12	0698-3150	6	1	RESISTOR 2.37K 1% .125W F TC=0+-100	24546	C4-1/8-T0-2371-F
A5R13	2100-3353	8	1	RESISTOR-TRMR 20K 10% C SIDE-ADJ 1-TRN	32997	3386X-Y46-203
A5R14	2100-3352	7	1	RESISTOR-TRMR 1K 10% C SIDE-ADJ 1-TRN	28480	2100-3352
A5R15	0757-0442	9		RESISTOR 10K 1% .125W F TC=0+-100	24546	C4-1/8-T0-1002-F
A5R16	0757-0416	7	1	RESISTOR 511 1% .125W F TC=0+-100	24546	C4-1/8-T0-511R-F
A5R17	0757-0719	3	1	RESISTOR 221 1% .25W F TC=0+-100	24546	C5-1/4-T0-221R-F
A5R18	0757-0720	6	1	RESISTOR 243 1% .25W F TC=0+-100	24546	C5-1/4-T0-243R-F
A5R19	2100-3426	6	1	RESISTOR-TRMR 20 10% C SIDE-ADJ 1-TRN	28480	2100-3426
A5R20	0757-0338	2	2	RESISTOR 1K 1% .25W F TC=0+-100	24546	C5-1/4-T0-1001-F
A5R21	0757-0338	2		RESISTOR 1K 1% .25W F TC=0+-100	24546	C5-1/4-T0-1001-F
A5R22	0698-3132	4	1	RESISTOR 261 1% .125W F TC=0+-100	24546	C4-1/8-T0-2610-F
A5R23	0757-0411	2	2	RESISTOR 332 1% .125W F TC=0+-100	24546	C4-1/8-T0-332R-F
A5R24	0757-0411	2		RESISTOR 332 1% .125W F TC=0+-100	24546	C4-1/8-T0-332R-F
A5R25	0698-3431	6	4	RESISTOR 23.7 1% .125W F TC=0+-100	03888	PME55-1/8-T0-23R7-F
A5R26	0698-3431	6		RESISTOR 23.7 1% .125W F TC=0+-100	03888	PME55-1/8-T0-23R7-F
A5R27	0757-0274	5	1	RESISTOR 1.21K 1% .125W F TC=0+-100	24546	C4-1/8-T0-1213-F
A5R28	0757-0408	7	3	RESISTOR 243 1% .125W F TC=0+-100	24546	C4-1/8-T0-243R-F
A5R29	0757-0408	7		RESISTOR 243 1% .125W F TC=0+-100	24546	C4-1/8-T0-243R-F
A5R30	0757-0403	2	2	RESISTOR 121 1% .125W F TC=0+-100	24546	C4-1/8-T0-121R-F
A5R31	0757-0403	2		RESISTOR 121 1% .125W F TC=0+-100	24546	C4-1/8-T0-121R-F
A5R32	0757-0442	9		RESISTOR 10K 1% .125W F TC=0+-100	24546	C4-1/8-T0-1002-F
A5R33	0757-0442	9		RESISTOR 10K 1% .125W F TC=0+-100	24546	C4-1/8-T0-1002-F
A5R34	0757-0443	7	1	RESISTOR 11K 1% .125W F TC=0+-100	28480	0757-0443
A5R35	0757-0441	8	1	RESISTOR 8.25K 1% .125W F TC=0+-100	24546	C4-1/8-T0-8251-F
A5R36	2100-2574	3	1	RESISTOR-TRMR 500 10% C SIDE-ADJ 1-TRN	30983	ET50X501
A5R37	0757-0449	6	1	RESISTOR 20K 1% .125W F TC=0+-100	24546	C4-1/8-T0-2002-F
A5R40	0757-0391	7		RESISTOR 39.2 1% .125W F TC=0+-100	24546	C4-1/8-T0-39R2-F
A5R41	0757-0391	7		RESISTOR 39.2 1% .125W F TC=0+-100	24546	C4-1/8-T0-39R2-F
A5R42	0757-0725	1	2	RESISTOR 475 1% .25W F TC=0+-100	24546	C5-1/4-T0-475R-F
A5R43	0757-0730	8	2	RESISTOR 750 1% .25W F TC=0+-100	24546	C5-1/4-T0-751-F
A5R44	0757-0730	8		RESISTOR 750 1% .25W F TC=0+-100	24546	C5-1/4-T0-751-F
A5R45	0757-0725	1		RESISTOR 475 1% .25W F TC=0+-100	24546	C5-1/4-T0-475R-F
A5R46	0757-0845	6	1	RESISTOR 18.2K 1% .5W F TC=0+-100	28480	0757-0845
A5R47	0698-3417	8	1	RESISTOR 23.7K 1% .5W F TC=0+-100	28480	0698-3417
A5R48	0698-3431	6		RESISTOR 23.7 1% .125W F TC=0+-100	03888	PME55-1/8-T0-23R7-F
A5R49	0698-3431	6		RESISTOR 23.7 1% .125W F TC=0+-100	03888	PME55-1/8-T0-23R7-F
A5R50	0761-0076	4	2	RESISTOR 18K 5% 1W MO TC=0+-200	28480	0761-0076
A5R51	0761-0076	4		RESISTOR 18K 5% 1W MO TC=0+-200	28480	0761-0076
A5R52	0761-0016	2	1	RESISTOR 7.5K 5% 1W MO TC=0+-200	28480	0761-0016
A5R53	0687-4721	6	1	RESISTOR 4.7K 10% .5W CC TC=0+647	01121	EB4721
A5R54	0687-1051	9	1	RESISTOR 1M 10% .5W CC TC=0+1000	01121	EB1051
A5R55	0757-0465	6	3	RESISTOR 100K 1% .125W F TC=0+-100	24546	C4-1/8-T0-1003-F
A5R56	0757-0280	3	3	RESISTOR 1K 1% .125W F TC=0+-100	24546	C4-1/8-T0-1001-F
A5R57	0757-0408	7		RESISTOR 243 1% .125W F TC=0+-100	24546	C4-1/8-T0-243R-F
A5R58	0757-0461	2	1	RESISTOR 68.1K 1% .125W F TC=0+-100	24546	C4-1/8-T0-6812-F
A5R59	0757-0283	6	1	RESISTOR 2K 1% .125W F TC=0+-100	24546	C4-1/8-T0-2001-F
A5R60	0757-0465	6		RESISTOR 100K 1% .125W F TC=0+-100	24546	C4-1/8-T0-1003-F
A5R61	0757-0473	6	2	RESISTOR 221K 1% .125W F TC=0+-100	24546	C4-1/8-T0-2213-F
A5R62	0757-0280	3		RESISTOR 1K 1% .125W F TC=0+-100	24546	C4-1/8-T0-1001-F
A5R63	0757-0465	6		RESISTOR 100K 1% .125W F TC=0+-100	24546	C4-1/8-T0-1003-F
A5R64	0757-0473	6		RESISTOR 221K 1% .125W F TC=0+-100	24546	C4-1/8-T0-2213-F
A5R65	0687-2711	0	1	RESISTOR 270 10% .5W CC TC=0+529	01121	EB2711
A5R66	0757-0280	3		RESISTOR 1K 1% .125W F TC=0+-100	24546	C4-1/8-T0-1001-F
A5S1	3101-1341	3	1	SWITCH-SL SPDT SUBMIN .5A 125VAC/DC	28480	3101-1341
A5U1	1820-0427	6	1	IC MODULATOR TO-100	04713	MC1496G
A5U2	1820-0352	6	1	TRANSISTOR ARRAY	01928	CA3018
A5U3	1820-0681	4	1	IC GATE TTL 8 NAND QUAD 2-INP	01295	SN74800N
A5V1	2140-0008	8	7	LAMP-GLOW A1A 115/59VDC 500UA T-2-BULB	28480	2140-0008
A5V2	2140-0008	8		LAMP-GLOW A1A 115/59VDC 500UA T-2-BULB	28480	2140-0008
A5V3	2140-0008	8		LAMP-GLOW A1A 115/59VDC 500UA T-2-BULB	28480	2140-0008
A5V4	2140-0008	8		LAMP-GLOW A1A 115/59VDC 500UA T-2-BULB	28480	2140-0008
A5V5	2140-0008	8		LAMP-GLOW A1A 115/59VDC 500UA T-2-BULB	28480	2140-0008

REPLACEMENT Z-AXIS PARTS LIST FOR SERIAL PREFIX 1943A

(Backdate as page 6-18b)

Table 7-3. Replaceable Parts (Cont'd)

Reference Designation	HP Part Number	C D	Qty	Description	Mfr Code	Mfr Part Number
A5V6	2140-0008	8		LAMP-GLOW A1A 115/59VDC 500UA T-2-8ULB	28480	2140-0008
A5V7	2140-0008	8		LAMP-GLOW A1A 115/59VDC 500UA T-2-8ULB	28480	2140-0008
A5VR1	1902-3139	7	1	DIODE-ZNR 8.25V 5% DO-7 PD=.4W TC=+.053%	28480	1902-3139
A5VR2	1902-3149	9	1	DIODE-ZNR 9.09V 5% DO-7 PD=.4W TC=+.057%	28480	1902-3149
A5VR3	1902-0184	6	1	DIODE-ZNR 16.2V 5% DO-7 PD=.4W TC=+.066%	28480	1902-0184
A5VR4	1902-0041	4	2	DIODE-ZNR 5.11V 5% DO-7 PD=.4W TC=-.009%	28480	1902-0041
A5VR5	1902-0041	4		DIODE-ZNR 5.11V 5% DO-7 PD=.4W TC=-.009%	28480	1902-0041

REPLACEMENT Z-AXIS PARTS LIST FOR SERIAL PREFIX 1943A

(Backdate as page 6-18c/6-18d blank)

8-32. SERVICE SHEET 4 PRINCIPLES OF OPERATION.

8-33. IMPEDANCE CONVERTER AND GAIN CONTROL (A5Q1, A5U1).

Q1 is a high input impedance source follower that provides unity gain with respect to the input signal. The signal from the source followers Q1 is applied to gain control circuit U1. (See figure 8-10 for the following discussion of the gain control circuit.)

Q1 and Q2 comprise the current source for the Z-axis gain control circuit (U1). R13 balances the current paths I_1 and I_2. Collector circuits of Q5, Q7 and Q6, Q8 make up the differential signal path to Q2A and Q2B. The front panel INTENSITY control sets the current differential between I_3 and I_4. During the low gain condition (large signal input) current paths I_3 and I_4 are approximately equal. During the high gain condition (low input signal) current paths I_3 and I_4 equal current path I_2.

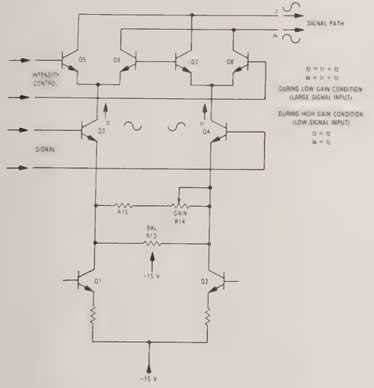

Figure 7-6. Simplified Schematic of Z-axis Gain Control

The output of the gain control circuit is fed to shunt-feedback amplifiers Q2A and Q2B. Transistor array U2 consists of four separate transistors (U2Q1 to U2Q4). U2Q1 is connected as a current source that supplies current to U2Q2 and U2Q3. U2Q3 provides signal current for the dynamic focus amplifier. U2Q2 and Q2B are connected in a cascade amplifier configuration and provide signal drive to the Z-axis output amplifier.

8-34. Z-AXIS OUTPUT AMPLIFIER (A5Q5 through A5Q8).

Transistors Q5 and Q6 function as emitter followers, while Q7 and Q8 are a complementary pair. A feedback circuit is provided through C27 and R52 with C27 providing adjustment for the fast corners of the output signal. Slower compensation is provided by network C17 and R36. CR7 and CR8 are high current diodes and provide protection for the output amplifiers against arcs and transients. The output of the Z-axis amplifier is applied to grid level translator on the high-voltage power supply assembly (A9) where it establishes the potential difference between the CRT grid and cathode (see service sheet 7).

8-35. PHOSPHOR PROTECTION.

The purpose of the phosphor protection circuit is to prevent CRT phosphor or expansion mesh damage caused by a high intensity, slow moving or static beam. Refer to figure 8-11, schematics 2 and 4 for the following discussion of circuit details.

The phosphor protection control voltage is picked off at the collectors of Q8A/Q8B and is applied to emitter followers Q9 and Q10. The signal is amplified by Q14 and Q15 and rectified by bridge rectifier CR9-CR12. C19 provides filtering for the bridge rectifier circuit. The output of the bridge rectifier is a negative voltage that is proportional to the X-Y axis input voltage. Low frequency or low amplitude input signals will not provide sufficient negative voltage at C19 to turn off Q16. Q17, A5Q9A and A5Q10A will remain off for as long as Q16 remains turned on. A5C3D charges to approximately +2.5 V through A5Q9B, turning A5Q10B, A5Q11 on. As long as A5Q11 is conducting, the Z-axis output level is clamped to approximately +18 V, therefore limiting CRT beam current.

Automatic beam current limiting may not be desirable in some system applications. In such cases the phosphor protection circuit may be disabled by an internal switch (A8S1).

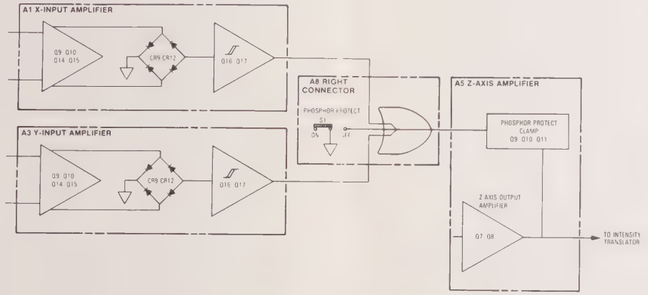

Figure 7-7. Simplified Block Diagram of the Phosphor Protection Circuit

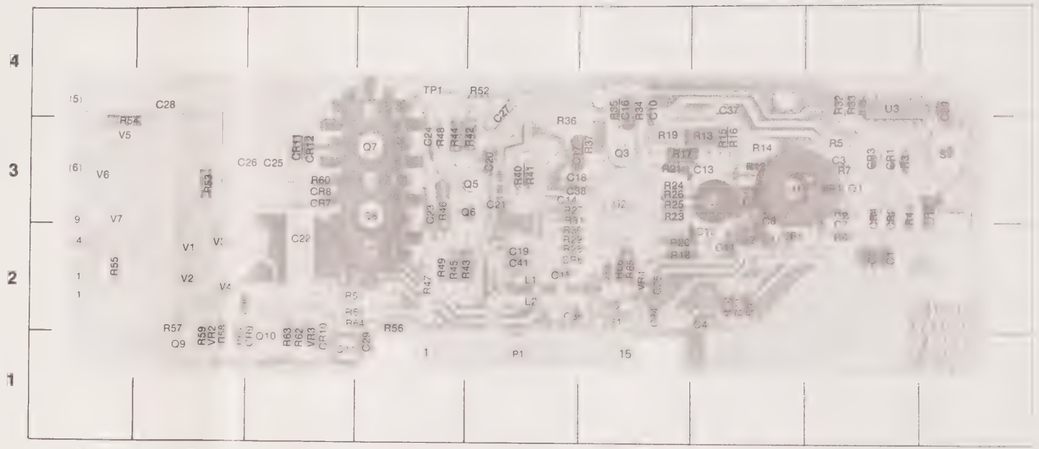

REF DESIG	GRID LOC	REF DESIG	GRID LOC	REF DESIG	GRID LOC	REF DESIG	GRID LOC	REF DESIG	GRID LOC	REF DESIG	GRID LOC	REF DESIG	GRID LOC	REF DESIG	GRID LOC	REF DESIG	GRID LOC
C1	H-2	C18	E-3	C35	F-2	CR11	C-3	R2	I-3	R18	F-2	R34	F-4	R52	E-4	TP1	D-4
C2	H-2	C19	E-2	C36	E-1	CR12	C-3	R3	H-3	R19	F-3	R35	F-4	R53	B-3	U1	G-3
C3	H-3	C20	E-3	C37	G-4	L1	E-2	R4	H-3	R20	F-2	R36	E-3	R54	A-3	U2	F-3
C4	G-2	C21	E-3	C38	E-2	L2	E-2	R5	H-3	R21	F-3	R37	F-3	R55	A-2	U3	H-4
C5	G-3	C22	C-2	C39	I-4	P1	E-1	R6	H-2	R22	G-2	R40	E-3	R56	D-2	V1	B-2
C6	G-3	C23	D-3	C41	E-2	Q1	H-3	R7	H-3	R23	F-3	R41	E-3	R57	B-2	V2	B-2
C7	H-3	C24	D-3	CR1	H-3	Q2	G-3	R8	H-3	R24	F-3	R42	D-3	R58	B-1	V3	B-2
C8	G-3	C25	C-3	CR2	H-3	Q3	F-3	R9	G-2	R25	F-3	R43	D-2	R59	B-1	V4	B-2
C9	G-2	C26	B-3	CR3	H-3	Q5	E-3	R10	G-2	R26	F-3	R44	D-3	R60	C-3	V5	A-3
C10	F-4	C27	E-4	CR4	H-3	Q6	E-3	R11	G-2	R27	E-3	R45	D-2	R61	B-1	V6	A-3
C11	G-2	C28	B-4	CR5	G-2	Q7	D-3	R12	G-3	R28	E-2	R46	D-3	R62	C-1	V7	A-3
C12	G-2	C29	D-1	CR6	E-2	Q8	D-3	R13	G-3	R29	E-2	R47	D-2	R63	C-1	VR1	H-3
C13	G-3	C30	B-2	CR7	C-3	Q9	B-1	R14	G-3	R30	E-2	R48	D-3	R64	C-2	VR2	B-1
C14	E-3	C31	F-2	CR8	C-3	Q10	C-1	R15	G-3	R31	E-3	R49	D-2	R65	F-2	VR3	C-1
C15	E-2	C32	F-2	CR9	C-1	Q11	C-1	R16	G-3	R32	H-4	R50	C-2	R66	F-2	VR4	F-2
C16	F-4	C33	F-2	CR10	C-1	R1	I-3	R17	F-3	R33	H-4	R51	C-2	S1	I-3	VR5	F-2
C17	E-3	C34	F-2														

REPLACEMENT Z-AXIS SERVICE SHEET 4 FOR SERIAL PREFIX 1943A
(Backdate as page 8-8a)

Figure 7-8. Z-axis Amplifier (A5) Component Locator

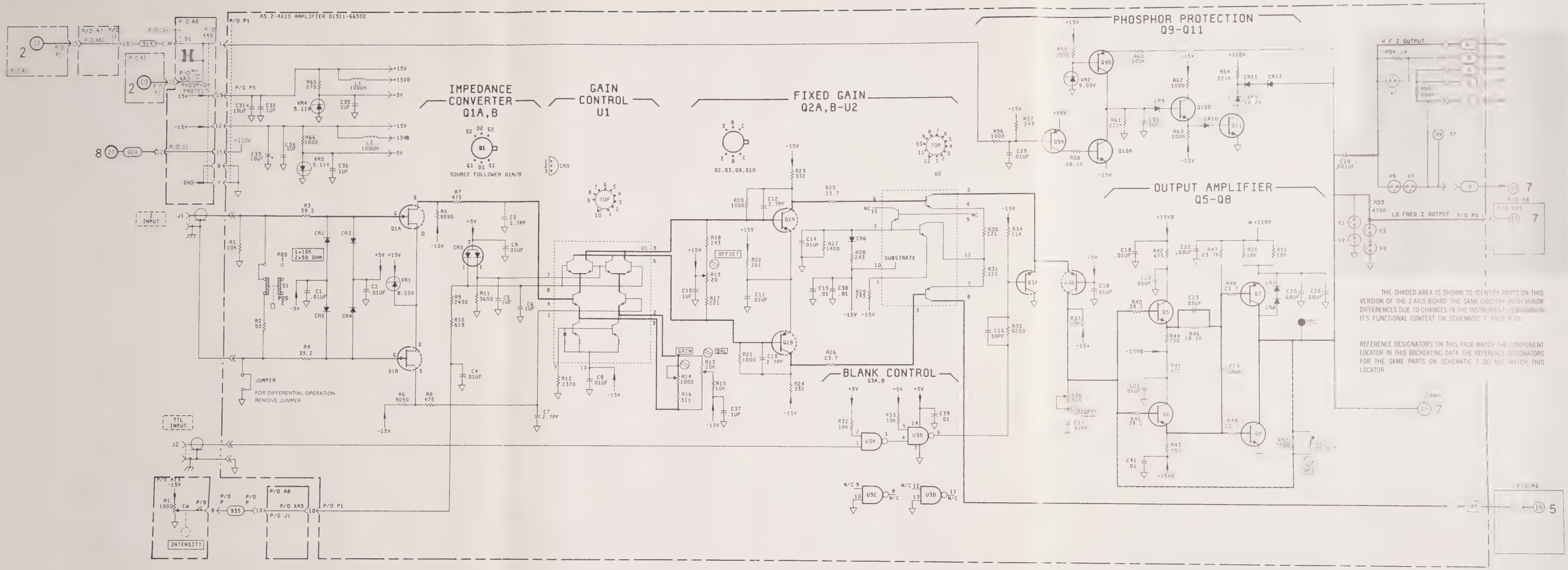

Figure 7-9. Service Sheet 4, Z-axis Amplifier (A5) Schematic

REPLACEMENT Z-AXIS SERVICE SHEET 4 FOR SERIAL PREFIX 1943A
(Backdate as page 8-8b)

REFER TO ANSI Y32.2 AND Y32.14 FOR SCHEMATIC SYMBOLS NOT LISTED IN THIS TABLE.

ETCHED CIRCUIT BOARD

ASSEMBLY

ETCHED CIRCUIT BOARD ON ASSEMBLY

VERNIER — FRONT-PANEL MARKING

VERNIER — REAR-PANEL MARKING

MAIN SIGNAL PATH

PRIMARY FEEDBACK PATH

SECONDARY FEEDBACK PATH

SINGLE-PIN CONNECTOR ON BOARD

A — PIN OF A PLUG-IN BOARD (WITH LETTER OR NUMBER)

COAXIAL CABLE CONNECTED DIRECTLY TO BOARD

COAXIAL CABLE CONNECTED TO SNAP-ON JACK

FRONT-PANEL CONTROL

1 — TEST POINT

SCREWDRIVER ADJUSTMENT

FERRITE BEAD

A — COMMON ELECTRICAL POINT (WITH LETTER); NOT NECESSARILY GROUND

70 — SIGNAL REFERENCE

9 — SCHEMATIC REFERENCE

ZENER

LIGHT EMITTING DIODE (LED)

SCR (SILICON CONTROLLED RECTIFIER)

EARTH GROUND

CHASSIS GROUND

(925) WIRE COLORS ARE GIVEN BY ENCLOSED NUMBERS USING THE RESISTOR COLOR CODE

| (925) IS WHT-RED-GRN |

0 - BLACK	5 - GREEN
1 - BROWN	6 - BLUE
2 - RED	7 - VIOLET
3 - ORANGE	8 - GRAY
4 - YELLOW	9 - WHITE

* OPTIMUM VALUE SELECTED AT FACTORY, TYPICAL VALUE SHOWN; PART MAY HAVE BEEN OMITTED.

UNLESS OTHERWISE INDICATED ALL LOGIC ELEMENTS ARE OF THE TTL LOGIC FAMILY

UNLESS OTHERWISE INDICATED: RESISTANCE IN OHMS, CAPACITANCE IN PICOFARADS AND INDUCTANCE IN MICROHENRIES

CW	CLOCKWISE END OF VARIABLE RESISTOR
NC	NO CONNECTION
P/O	PART OF

VF (A)

V - VOLTAGE
F - FILTERED
(A) - FILTER SOURCE

Figure 8-1. Schematic Diagram Symbols

SECTION VIII

SERVICE

8-1. INTRODUCTION.

8-2. This section provides instructions for troubleshooting and repairing the Model 1311B X-Y Display.

8-3. Detailed theory of operation and troubleshooting information are located opposite the schematics on foldout Service Sheets. The remainder of this section has general service information that should help you quickly service and repair the X-Y display.

8-4. THEORY OF OPERATION.

8-5. Overall theory of operation appears on pages opposite the block diagram (Service Sheet 1). Each section of the diagram refers to service sheets where detailed theory, schematics, and troubleshooting information are presented. Figure 8-1 explains any unusual symbols that appear on the schematics.

8-6. TROUBLESHOOTING.

WARNING

Read the Safety Summary at the front of this manual before troubleshooting the instrument.

8-7. INITIAL TROUBLESHOOTING PROCEDURE. Before troubleshooting the 1311B in detail, try to perform the adjustment procedures listed in Section V of this manual. Some apparent malfunctions may be corrected by these adjustments, or failure to obtain a correct adjustment will often reveal the source of trouble.

NOTE

Before performing any troubleshooting procedure, eliminate static charge from glass of the CRT faceplate by solidly grounding one hand while rubbing the CRT faceplate with the other hand.

8-8. DC VOLTAGES AND WAVEFORMS. DC voltages, waveforms, and conditions for making these measurements are given on, or adjacent to schematics on the service sheets. Since conditions for making measurements may differ from one circuit to another, always check the specific conditions listed for each schematic.

8-9. RECOMMENDED TEST EQUIPMENT.

8-10. Test equipment required to maintain the 1311B is listed in Section I, table 1-4. Equipment other than that listed may be used if it meets the listed critical specifications.

8-11. REPAIR.

8-12. ASSEMBLY REMOVAL. Instructions for removing major assemblies are contained in the service sheet instructions for that particular assembly. Before servicing the instrument, remove top and bottom covers. Refer to table 8-1 for the list of assemblies indexed to Service Sheets.

Table 8-1. Service Sheet Quick Reference

Assembly	Name	Service Sheet(s)
A1	X-input Amplifier	2
A2	X-output Amplifier	3
A3	Y-input Amplifier	2
A4	Y-output Amplifier	3
A5	Z-axis Amplifier	4, 7
A6	Dynamic Focus and Astigmatism	5, 6
A7	Left Connector Board	ALL
A8	Right Connector Board	ALL
A9	High Voltage Power Supply	7
A10	High Voltage Multiplier	7
A11	Low Voltage Power Supply	8
A12	Line Module	8
A13	Control Assembly	2,4,6,7,8
A14	Extender Board	N/A

8-13. PREVENTIVE MAINTENANCE. Painted surfaces can be cleaned with a commercial, spray-type window cleaner or with a mild soap and water solution.

CAUTION

Do not use chemical cleaning agents that might damage the plastics used in this instrument. Recommended cleaning agents are isopropyl alcohol, or a solution of 1% mild detergent and 99% water.

8-14. Corroded spots are best removed with soap and water. Stubborn residues can be removed with a fine abrasive. Protect such areas from further corrosion with an application of silicone resin such as GE DRIFILM 88.

8-15. CIRCUIT BOARDS.

8-16. BOARD CONNECTIONS. Square-pin connectors are identified on circuit boards by color code of connecting wire or by the signal name. Connector pins on plugs and jacks are identified by either a number or a letter. Coaxial wires are identified by different shrink-tubing colors.

8-17. SERVICING ETCHED CIRCUIT BOARDS. All the etched circuit boards have plated-through component holes. This allows components to be removed or replaced from either side of the board. When unsoldering large components such as potentiometers, rotate the soldering iron tip from lead to lead while applying pressure to the part to lift it from the board. HP Service Note M-20E contains additional information for repair of circuit boards.

8-18. SERVICE SHEET 1 BASIC PRINCIPLES OF OPERATION.

8-19. GENERAL.

The following paragraphs contain functional descriptions keyed to the simplified block diagram on the opposite page. The block diagram is drawn for function and does not show circuit details. Circuit details and circuit description are located on the schematics following the block diagram (schematic 1). Refer to table 8-1 for schematic identification.

8-20. DEFLECTION AMPLIFIERS.

The X and Y amplifier circuits are identical. They amplify the input signals to the necessary level to drive the CRT horizontal and vertical deflection plates. Each amplifier can be connected for positive, negative, or differential input with the input impedance selectable for 10 kohms or 50 ohms.

8-21. Z-AXIS AMPLIFIER.

The high voltage supply for the CRT grid is controlled by the Z-axis amplifier output level. Consequently, either the voltage applied at the Z-INPUT or the 3-bit binary word applied to the binary input, controls the CRT beam intensity. The Z-axis board can be strapped to permit blanking by either a positive or negative voltage at the Z-INPUT or a logic high (5 volts) or low (0 volts) at the TTL-INPUT. Blanking may also be performed by presenting the proper 3-bit binary word to the binary input port. Also selectable is either a standard beam intensity (contrast) or an offset beam intensity (brightness).

8-22. PHOSPHOR PROTECTION.

The phosphor protection circuits prevent CRT phosphor or mesh burns by static or slow moving beam. When a low frequency signal, or the absence of an input signal, is detected by either X or Y phosphor protection circuit, the output of the Z-axis amplifier is limited to approximately +18 V. This action in turn limits CRT grid drive. In some system applications, automatic beam current limiting may not be desirable. In such cases the phosphor protection circuit may be disabled by an internal switch (A8S1).

8-23. DYNAMIC FOCUS AND ASTIGMATISM.

The purpose of the dynamic focus and astigmatism circuits is to provide optimum focus of the displayed signals over the entire screen. Samples from the X and Y deflection amplifiers, proportional to the CRT beam position, drive the focus and astigmatism circuits. The astigmatism element is directly controlled by the output of the astigmatism driver. The output of the focus amplifier is applied to the focus level translator on the high voltage power supply assembly where it establishes operating potential for the CRT focus grid.

8-24. LOW VOLTAGE POWER SUPPLY.

The low voltage power supply converts the ac line input to three regulated dc power supplies, +250 V, +15 V, and −15 V. The +250 V and the −15 V supplies are adjustable and the +15 V supply is referenced to the −15 V supply. A separate dc supply, approximately 21.5 V, is provided for the high voltage oscillator.

8-25. HIGH VOLTAGE POWER SUPPLY.

The high voltage power supply provides the high operating potentials for the CRT: ≅ −4550 V for the cathode, a grid voltage referenced to the cathode, CRT filament voltage, and a post-accelerator potential of ≅24 kV. The high voltage power supply also contains a focus level translator circuit which, along with the dynamic focus amplifier, automatically adjusts the beam focus with changes in beam intensity and position.

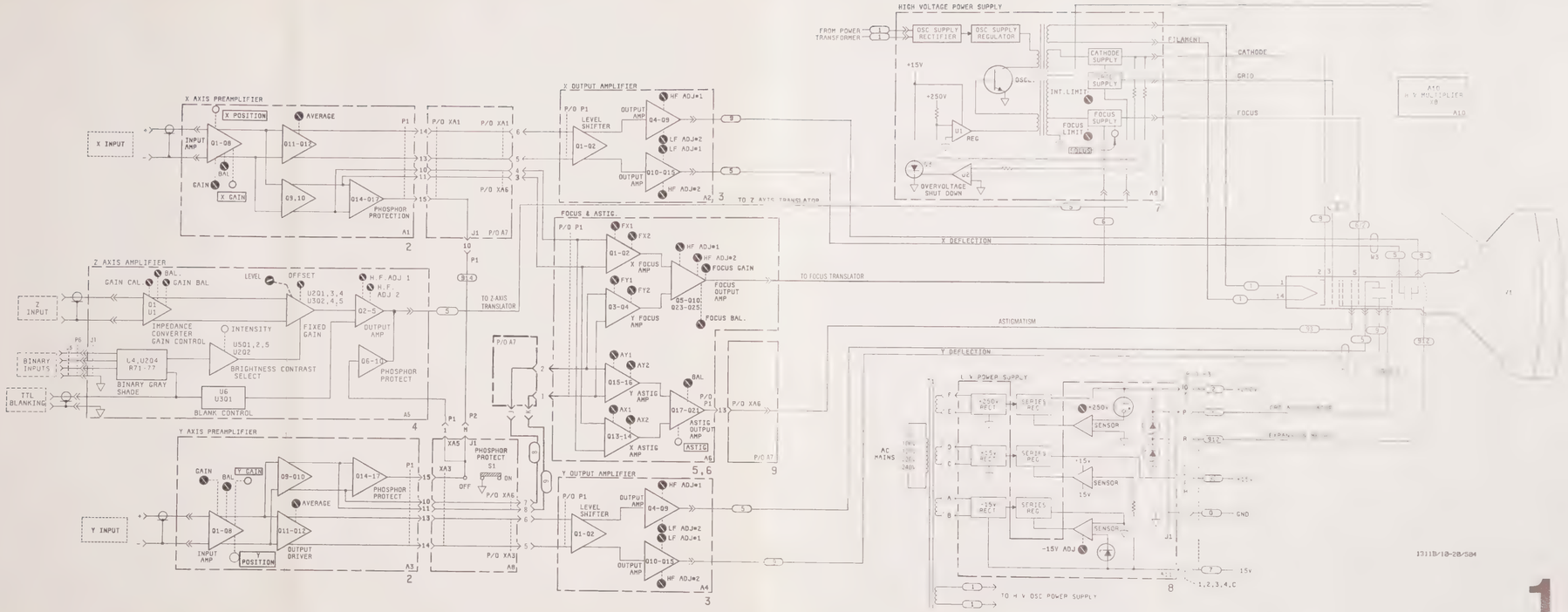

1

Figure 8-2.
Service Sheet 1, Overall Block Diagram

8-26. SERVICE SHEET 2 PRINCIPLES OF OPERATION.

8-27. INPUT AMPLIFIER AND GAIN CONTROL CIRCUIT (Q1A, Q1B).

Q1A and Q1B are high input impedance source followers that provide unity gain with respect to the input signal. The bias point of Q1 is determined by the FET characteristics (VP and IDSS) for the particular device.

VP = pinch off voltage

IDSS = drain current with drain to source voltage = 0 V.

VS will be between 0 V and +5 V with the gate at 0 V.

8-28. GAIN CONTROL (U1, U2, Q5).

The signal from the source follower (Q1) is applied to the gain control circuit. (See figure 8-3 for the following discussion.)

U1Q3 and U1Q4 make up the current source for the gain control circuit. R11 balances current paths I1 and I2 in the absence of an input signal. R12 determines the current differential between I1 and I2 when a signal is applied. Collector circuit of U2Q2 and U2Q3 comprise the differential signal path to Q8. Collector of U2Q1 and U2Q4 make up the current sink path to Q5.

The front panel GAIN control (A13R3) determines the amount of current applied to the signal path (I4) versus the amount of current applied to the current sink path (I3). If the front panel GAIN control (A13R3) is set for mininum gain (ccw) then less current is applied to the signal path (I4) and more current is shunted to current sink Q5 (I3). At the maximum gain setting (cw) the opposite is true. This is accomplished by decreasing (front panel GAIN ccw) or increasing (front panel GAIN cw) current through R29 and R3. Q8 converts the differential signal current from U2Q2 and U2Q3 to a differential signal voltage which is applied to the bases of Q11 and Q12. Position control is accomplished by controlling current through Q6 and Q7.

The voltage applied to the bases of Q11 and Q12 determines the differential current flowing through Q11, Q12. Q13 supplies current for Q11 and Q12. Average adjustment (R64) sets current available for Q11 and Q12.

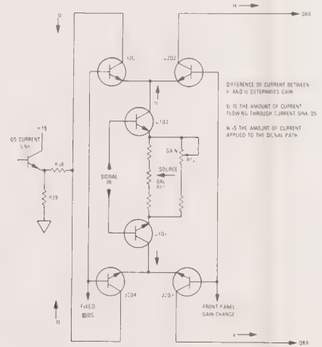

Figure 8-3. Simplified Schematic of X-Y Gain Control

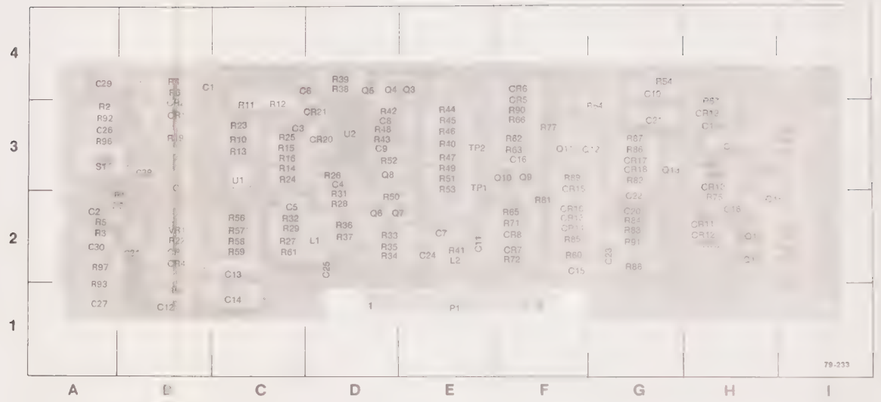

REF DESIG	LOC	REF DESIG	LOC	REF DESIG	LOC	REF DESIG	LOC	REF DESIG	LOC	REF DESIG	LOC	REF DESIG	LOC
C21	G-3	CR10	H-3	Q5	D-4	R10	C-3	R35	D-2	R54	G-4	R73	H-2
C22	G-2	CR11	H-2	Q6	D-2	R11	C-4	R36	D-2	R55	B-1	R74	H-2
C23	G-2	CR12	H-2	Q7	D-2	R12	C-4	R37	D-2	R56	C-2	R75	H-2
C24	E-2	CR13	F-2	Q8	D-3	R13	C-3	R38	D-2	R57	C-2	R76	I-2
C25	D-2	CR14	F-2	Q9	F-3	R14	C-3	R39	D-4	R58	C-2	R77	F-2
C26	A-3	CR15	F-3	Q10	F-3	R15	C-3	R40	E-3	R59	C-2	R78	I-2
C27	A-1	CR16	F-2	Q11	F-3	R16	C-3	R41	E-2	R60	F-2	R79	I-2
C28	B-3	CR17	G-3	Q12	G-3	R19	B-3	R42	D-3	R61	C-2	R80	I-2
C29	A-4	CR18	G-3	Q13	G-3	R22	B-2	R43	D-3	R62	F-3	R81	F-2
C30	A-2	CR19	H-3	Q14	H-3	R23	C-3	R44	E-3	R63	F-3	R82	G-3
C31	B-2	CR20	D-3	Q15	H-2	R24	C-3	R45	E-3	R64	G-3	R83	G-2
CR1	B-3	CR21	D-3	Q16	H-2	R25	C-3	R46	E-3	R65	F-2	R84	G-2
CR2	B-4	CR22	D-3	Q17	H-2	R26	D-3	R47	E-3	R66	F-3	R85	F-2
CR3	B-2	CR23	D-3	R1	A-3	R27	C-2	R48	D-3	R67	H-4	R86	G-3
CR4	B-2	L1	D-2	R2	A-3	R28	D-2	R49	E-3	R68	I-3	R87	G-3
CR5	F-4	L2	E-2	R3	A-2	R29	C-2	R50	D-2	R69	I-3	R88	G-2
CR6	F-4	P1	E-1	R4	B-4	R31	D-3	R51	E-3	R70	I-3	R89	F-3
CR7	F-2	Q1	B-3	R5	A-2	R32	C-2	R52	D-3	R71	F-2	R90	F-3
CR8	F-2	Q3	E-4	R6	B-4	R33	D-2	R53	E-3	R72	F-2	R91	G-2
CR9	H-3	Q4	D-4	R7	A-2	R34	D-2						

Figure 8-4. X-Y Input Amplifier (A1, A3) Component Locator

Reference Designator	Vfsd = 2V		Vfsd = 5V		Vfsd = 10V	
	Value	HP Stock No.	Value	HP Stock No.	Value	HP Stock No.
A1 A3 C28	15 pf	0160-2261	2·4 pf	0160-3592	N·A	N/A
A1 A3 C29	4·5 pf—20 pf	0121-0446	4·5 pf—20 pf	0121-0446	4·5 pf—20 pf	0121-0446
A1 A3 C30	15 pf	0160-2261	2·4 pf	0160-3592	N·A	N/A
A1 A3 C31	4·5 pf—20 pf	0121-0446	4·5 pf—20 pf	0121-0446	4·5 pf—20 pf	0121-0446
A1 A3 R2	7·5K	0757-0440	3·01K	0757-0273	3·11K	0757-0339
A1 A3 R3	7·5K	0757-0440	3·01K	0757-0273	3·11K	0757-0339
A1 A3 R96	7·5K	0757-0440	12·1K	0757-0841	27·4K	0757-0763
A1 A3 R97	7·5K	0757-0440	12·1K	0757-0841	N/A	N/A

FULL SCALE DEFLECTION VOLTAGE (Vfsd)	VALUES OF C28		VALUE OF C30	VALUES OF C29		VALUE OF C31	VALUES OF R2		VALUES OF R3	VALUES OF R96		VALUES OF R97
	SINGLE ENDED	DIF.		SINGLE ENDED	DIF.		SINGLE ENDED	DIF		SINGLE ENDED	DIF	
1V	STANDARD INSTRUMENT	N/A	N/A	N/A	N/A	N/A	47	10K	10K	JUMPER	JMPR	JUMPER
2V	N/A	15	15	N/A	4·5-20	4·5-20	47	7500	7500	JUMPER	7500	7500
5V	N/A	2·4	2·4	N/A	4·5-20	4·5-20	47	3010	3010	JUMPER	12.1K	12.1K
10V	N/A	N/A	N/A	N/A	4·5-20	4·5-20	47	3010	3010	JUMPER	27.4K	27.4K

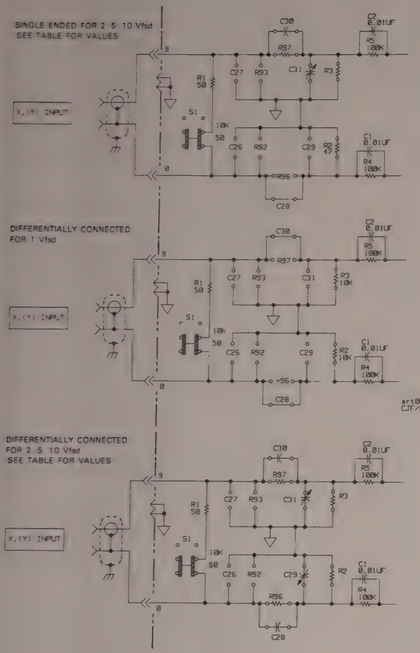

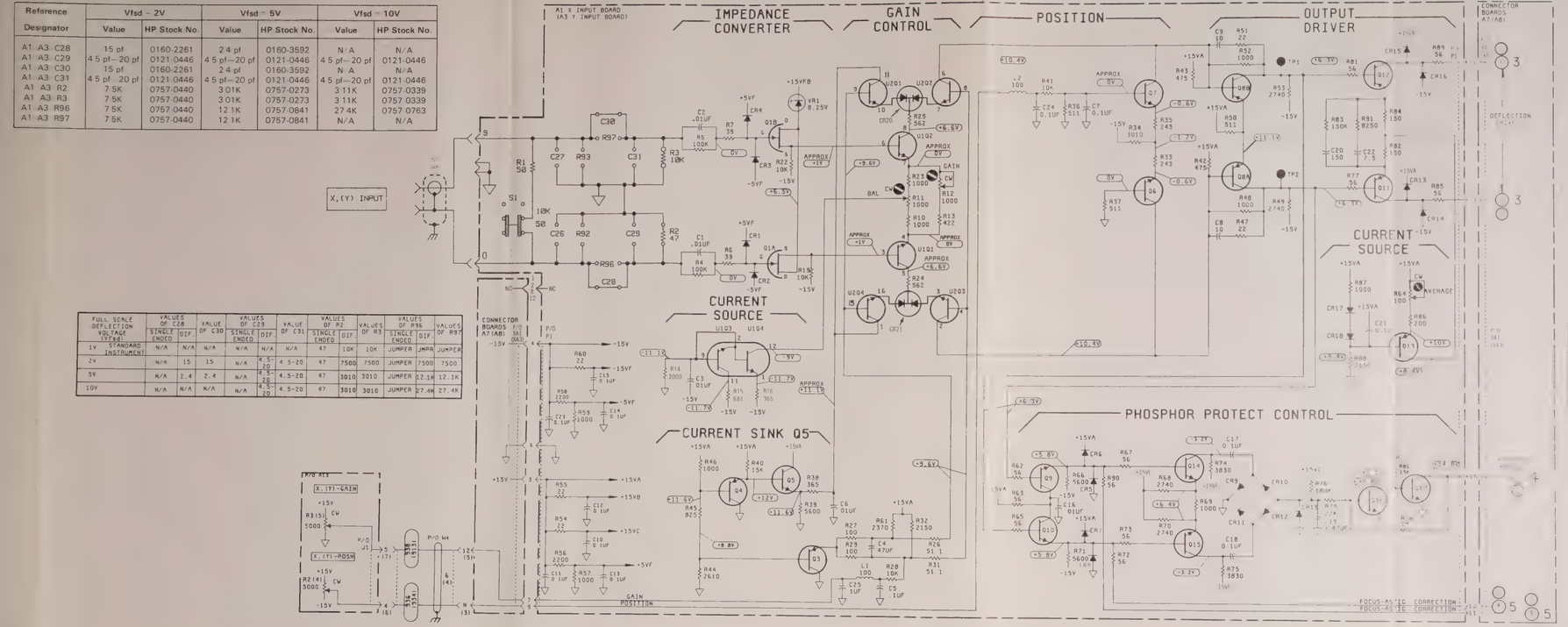

PARTS ON THIS SCHEMATIC	
A1 OR A3	A13

8-29. SERVICE SHEET 3 PRINCIPLES OF OPERATION.

NOTE: The output amplifier assembly (A2, A4) consists of two identical amplifiers each driving separate deflection plates. The following circuit description describes amplifier Q4 through Q9 and also applies to amplifier Q10 through Q15. (See figure 8-6, simplified output amplifier schematic).

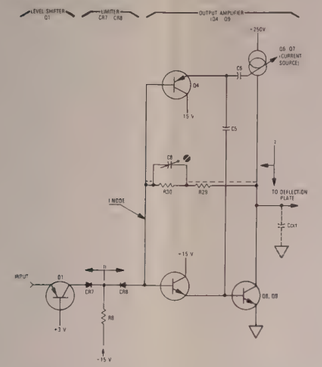

Figure 8-6. Simplified Output Amplifier Schematic

8-30. X-Y OUTPUT AMPLIFIER (Q4 through Q9, Q10 through Q15).

The output amplifier Q4 through Q9 operates as a current to voltage converter; that is, a small current change from the input results in a large voltage swing at the deflection plates. Q4 and Q5 are emitter followers. Q6 and Q7 make up the constant current source for the output amplifier (current I_2 remains constant except for very fast transitions). Transistors Q8 and Q9 perform the signal amplification. Q1 is a common base voltage level shifter. R8 supplies current to the output amplifier and the level shifter.

The current flowing through CR8 equals the current flowing through R29 and R30. When the input signal current changes, the portion of R8 current I_1 flowing through CR8 changes inversely. This action changes current flow through Q5, Q8 and Q9. The current supplied by Q6, Q7 (I_2) flows through Q8, Q9 or through feedback path R29 and R30. The current through the feedback path R29 and R30 is inversely proportional to current flow through Q8 and Q9. These varying currents through R29 and R30 equal the current changes through CR8. The I NODE side of R30 is always 1.2 V above ground, i.e., two diode drops (base emitter junctions of Q5 and Q8).

Where the current through the feedback path changes, the voltage drops across R29 and R30 change, resulting in large output voltage swings to the deflection plates. The purpose of Q4 is to speed up the fast low to high transitions by modifying the constant current source Q6, Q7. During these faster transition times more current is supplied to the circuit capacitance (CCKT). During the high to low transition the signal is coupled through C5, momentarily decreasing current I_2. This action allows Q8 and Q9 to discharge the circuit capacitance (CCKT) at a faster rate.

Due to the high voltage (250 V) and large voltage swings required by the deflection plates, the output devices actually consist of two stacked transistors sharing the voltages. Q8 and Q9 make up the output amplifiers, while transistors Q6 and Q7 supply the current. Pulse fidelity is compensated for by adjustment C8 (HF ADF No. 1).

8-31. TROUBLESHOOTING.

If trouble is suspected, visually inspect the instrument. Look for loose or burned components that might suggest a source of trouble. Verify that all circuit board connections are making good contact. If no obvious trouble is found, check power supply voltages in the unit. Because there is a high degree of negative feedback in the output amplifier, the stage is relatively free of beta differences in the transistors. Use table 8-2 as a guide for major failures.

Table 8-2. Troubleshooting Guide for X-Y Output Amplifier

DEFLECTION PLATE VOLTAGE IS	AND THE I NODE VOLTAGE IS		
	LOW	≈1.2 V	HIGH
near 0 V	Check Q6,Q7 and associated resistors	Q1 R8 CR7, CR8	Q5, Q8
greater than 200 V	R29, R39 Q5,Q8 shorted	Q5,Q8,Q9 open Q1	

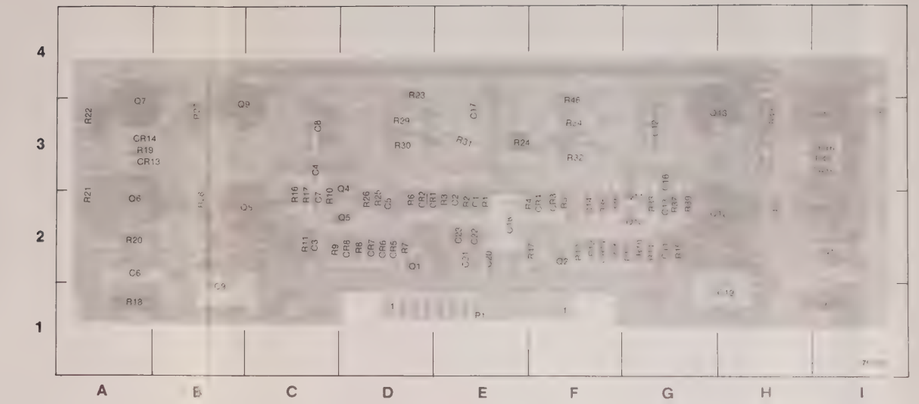

REF DES	GRID LOC	REF DES	GRID LOC	REF DES	GRID LOC	REF DES	GRID LOC	REF DES	GRID LOC	REF DES	GRID LOC	REF DES	GRID LOC	REF DES	GRID LOC
C1	E-2	C13	G-2	CR1	D-2	CR12	F-2	Q7	A-3	R1	E-2	R14	G-2	R26	D-2
C2	E-2	C14	F-2	CR2	D-2	CR13	A-3	Q8	B-2	R2	E-2	R15	G-2	R27	D-2
C3	C-2	C15	I-2	CR3	F-2	CR14	A-3	Q9	B-3	R5	F-2	R16	C-2	R28	B-3
C4	C-2	C16	G-3	CR4	F-2	CR15	I-3	Q10	G-2	R6	D-2	R17	C-2	R29	B-2
C5	D-2	C17	E-3	CR5	D-2	CR16	I-3	Q11	G-2	R7	D-2	R18	A-1	R30	D-3
C6	A-2	C18	E-2	CR6	D-2	P1	E-1	Q12	H-2	R8	D-2	R19	A-3	R31	D-3
C7	C-2	C19	H-1	CR7	D-2	Q1	D-2	Q13	H-3	R9	C-2	R20	A-2	R11	E-3
C8	C-3	C20	E-2	CR8	D-2	Q2	F-2	Q14	I-2	R10	C-2	R21	A-2	R32	F-3
C9	B-1	C21	E-2	CR9	F-2	Q4	D-3	Q15	I-3	R11	C-2	R22	A-3	R33	F-2
C11	G-2	C22	E-2	CR10	G-2	Q5	D-2	R1	E-2	R12	F-2	R23	D-4	R34	F-3
C12	G-3	C23	E-2	CR11	F-2	Q6	A-2	R2	E-2	R13	G-2	R24	E-3	R35	F-2

Figure 8-7. X-Y Output Amplifier (A2, A4) Component Locator

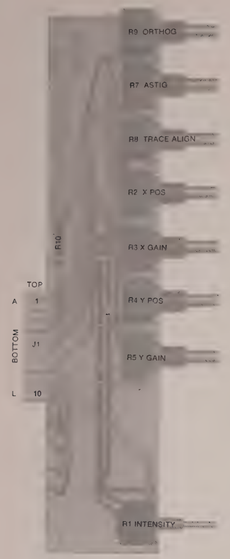

Figure 8-8. Control Board (A13) Component Locator

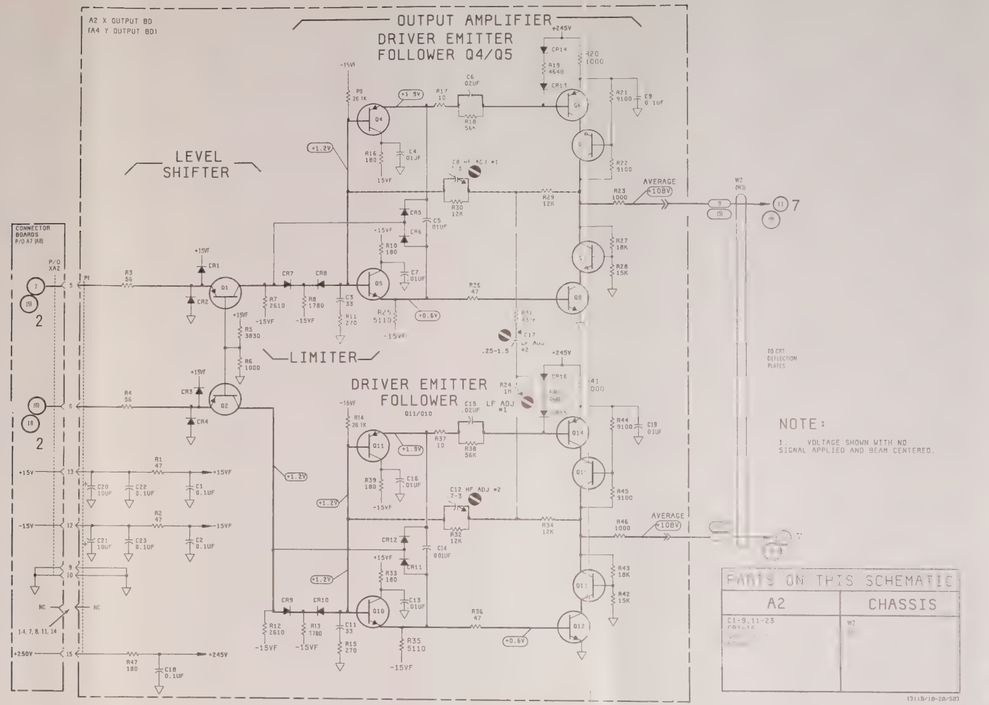

3

Figure 8-9
Service Sheet 3, X-Y Axis Output Amplifier (A2, A4) Schematic

8-32. SERVICE SHEET 4 PRINCIPLES OF OPERATION.

8-33. Impedance Converter, Gain Control and Binary Gray Shade.

Q1 is a high input impedance source follower that provides unity gain. The signal from the source follower Q1 is applied to gain control circuit U1. See figure 8-10 for the following discussion of the gain control circuit.

Q1 and Q2 comprise the current source for the Z-Axis gain control circuit U1. R19 balances the current paths I1 and I2. Collector circuits of Q5, Q7 and Q6, Q8 make up the differential signal path to U2Q1 and U2Q4. The front panel INTENSITY control sets the current differential between I3 and I4 are approximately equal. During the high gain condition (low input signal) current paths I3 and I4 equal current path I2.

The output of gain control circuit U1 is fed to fixed gain amplifier U2. When the Z-Axis is connected in the standard mode jumpers E5 and E6, the offset through U2 is set by R21. The front panel INTENSITY controls the gain of U1 and the offset is constant through U2. In the option 003 mode, U1 is a fixed gain stage and the INTENSITY controls the offset through U2 (see simplified flow chart of the Z-Axis Amplifier below).

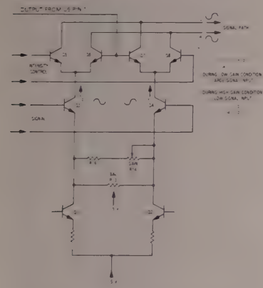

Figure 8-10. Simplified Schematic of Z-axis Gain Control

U3 is a current source for both the focus amplifier and the Z-Axis output. The current differential between U3Q3 and U3Q4 determines the current split between The Focus Amplifier and Z-Axis output. U3Q1 and U3Q2 act as a switch. If the TTL Blanking is not used, U3Q2 is turned on and U3Q1 is off. When TTL Blanking is used, U3Q1 turns and U3Q2 turns off.

BINARY INTENSITY LEVEL

A5U4 is a dual two to four line decoder. Depending on the binary input code (input to J5), a combination of two resistors from network A5R71 through A5R77 are placed in parallel with A5R78. This resistor combination determines current flow through A5U5Q4. The current through A5U5Q4 sets the output voltage of differential amplifier A5U5Q1 Q2.

EXAMPLE. A binary code of 000 at J5 switches the resistor combination of A5R73 R77 in parallel with A5R78 and determines current flow through A5U5Q4.

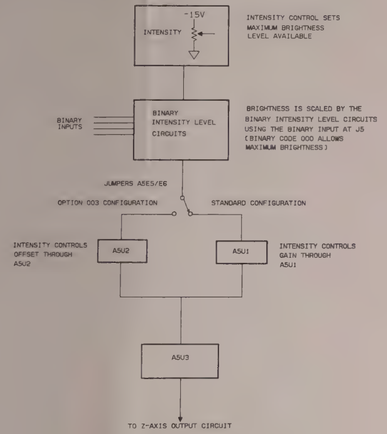

The output voltage of A5U5 is compared to the voltage set by Gain Balance adjustment A5R16. The difference between these two voltages sets the current differential between A5U1 pin 6 and A5U91 Pin 12.

8-34. Z-Axis Output Amplifier.

Transistors Q2 and Q3 function as emitter followers, while Q4 and Q5 are a complementary pair. A feedback circuit is provided through C6 and R56. C6 provides adjustment for the fast corners of the output pulse. Slower compensation is provided by network C5 and R53. CR7 and CR8 are high current diodes that provide protection for the output amplifier against arcs and transients. The output of the Z-Axis amplifier is applied to the grid level translator on the High-Voltage power supply assembly (A9) where it establishes the potential difference between CRT grid and cathode (see service sheet 7).

8-35. Phosphor Protection.

The purpose of the phosphor protection circuit is to prevent CRT phosphor or expansion mesh damage caused by a high intensity, slow moving or static beam. Refer to figure 8-11 and schematics 2 and 4 for the following discussion of circuit details.

The phosphor protection control voltage is picked off at the collectors of A1Q8A/Q8B and is applied to emitter followers A1Q9 and A1Q10. The signal is amplified by A1Q14 and A1Q15 and rectified by bridge rectifier A1CR9-CR12. A1C19 provides filtering for the rectifier signal. The output of the bridge rectifier is a negative voltage that is proportional to the X(Y) axis input voltage. Low frequency or low amplitude input signals will not provide sufficient negative voltage at A1C19 to turn off A1Q16. A1Q17, A5Q6 and A5Q7 will remain off for as long as A1Q16 remains turned on. A5C14 charges to approximately +2.5 V through A5Q8, turning A5Q9 and A5Q10 on. As long as A5Q10 is conducting, the Z-Axis output level is clamped to approximately +18 V, therefore limiting CRT beam current.

Automatic beam current limiting may not be desirable in some system applications. In such cases the phosphor protection circuit may be disabled by the Phosphor Protection switch A8S1.

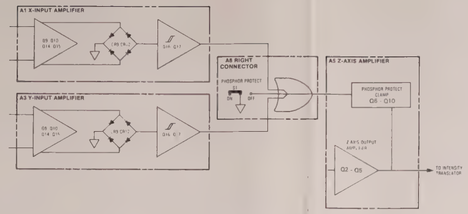

Figure 8-11. Simplified Block Diagram of the Phosphor Protection Circuit

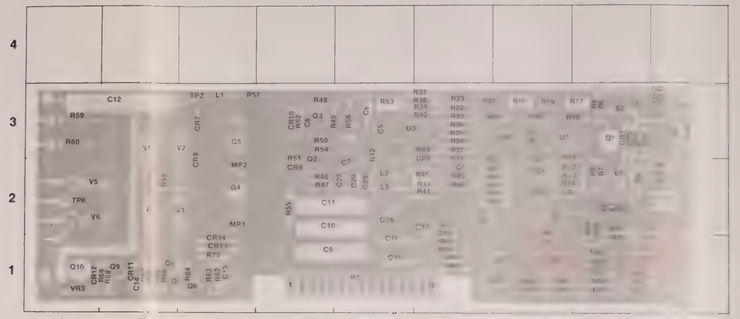

REF DESIG	GRID LOC	REF DESIG	GRID LOC	REF DESIG	GRID LOC	REF DESIG	GRID LOC	REF DESIG	GRID LOC	REF DESIG	GRID LOC	REF DESIG	GRID LOC	REF DESIG	GRID LOC
C1	J-3	C21	F-3	E2	H-3	Q7	B-1	R17	H-3	R37	F-3	R57	C-3	R76	H-1
C2	J-2	C22	E-2	E3	H-2	Q8	B-1	R18	G-3	R38	F-3	R58	B-2	R77	G-1
C3	G-2	C23	E-2	E4	H-2	Q9	B-1	R19	G-3	R39	F-3	R59	A-3	R78	H-2
C4	F-2	C24	F-2	E5	H-2	Q10	A-1	R20	G-3	R40	F-2	R60	A-3	R79	G-1
C5	E-3	C25	G-2	E6	H-2	R1	J-3	R21	F-3	R41	F-2			R80	G-1
C6	E-3	CR1	H-3	E7	H-2	R2	J-3	R22	F-3	R42	E-3	R62	C-1	R81	H-1
C7	E-2	CR2	H-3	E8	H-2	R3	J-3	R23	F-3	R43	F-2	R63	C-1	R82	H-1
C8	D-3	CR3	H-3	J1	J-2	R4	J-2	R24	F-2	R44	F-3	R64	C-1	R83	H-1
C9	D-1	CR4	H-3	L1	C-3	R5	J-2	R25	F-3	R45	F-2	R65	B-1	R84	H-2
C10	D-2	CR5	G-2	L2	E-2	R6	H-3	R26	F-2	R46	D-2	R66	B-1	R85	G-1
C11	D-2	CR6	F-2	L3	E-2	R7	H-2	R27	F-2	R47	D-2	R67	B-1	R86	G-1
C12	B-3	CR7	C-3	MP1	H-3	R8	H-3	R28	F-2	R48	D-3	R68	B-1	R87	G-1
C13	C-1	CR8	C-2	MP2	C-2	R9	H-2	R29	F-2	R49	D-3	R69	A-1	R88	G-1
C14	B-1	CR9	D-2	P1	E-1	R10	H-3	R30	F-2	R50	D-3	R70	C-1	R89	G-1
C15	E-1	CR10	D-3	Q1	H-3	R11	G-2	R31	F-2	R51	D-2	R71	J-2	R90	F-3
C16	E-1	CR11	B-1	Q2	D-2	R12	G-2	R32	F-3	R52	D-3	R72	J-1	R91	H-1
C17	F-2	CR12	A-1	Q3	D-3	R13	G-2	R33	F-3	R53	E-3	R73	H-1	R92	F-2
C18	E-2	CR13	C-1	Q4	C-2	R14	G-2	R34	F-3	R54	D-3	R74	H-1	R93	F-1
C19	F-1	CR14	C-1	Q5	C-3	R15	G-2	R35	F-3	R55	D-2	R75	H-1	R94	F-1
C20	E-2	E1	H-3	Q6	C-1	R16	G-3	R36	F-3	R56	E-3			R95	F-1

Figure 8-12. Z-axis Amplifier (A5) Component Locator

DC VOLTAGE MEASUREMENT CONDITIONS SERVICE SHEET 4

1. A5 Z-Axis amplifier in standard configuration as shown in figure 3-6.

2. No signal applied to Z INPUT. TTL input has shorting cap installed. PHOSPHOR PROTECT switch "AS5" OFF.

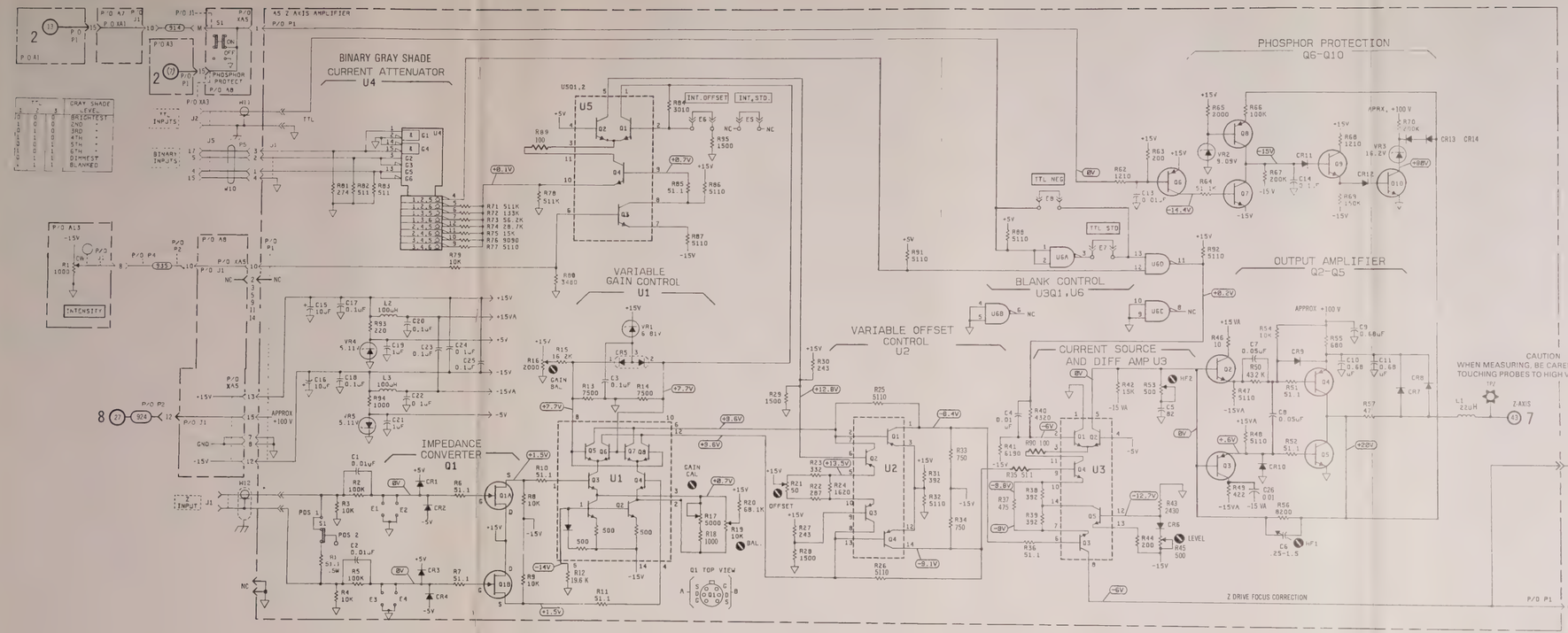

1311B/18-28/585

4

Figure 8-13. Service Sheet 4, Z-Axis Amplifier (A5) Schematic

8-36. SERVICE SHEET 5 PRINCIPLES OF OPERATION.

8-37. DYNAMIC FOCUS.

The purpose of focus correction is to provide optimum focus of the displayed signal over the entire screen. The focus voltage required for optimum spot size varies as the square of the distance from center screen. The focus correction circuit approximates this variation using a differential amplifier with two diode controlled gain break points.

8-38. X-Y INPUT AMPLIFIERS (A6Q1 through A6Q4).

The required square law response is achieved in the following manner: with gain adjustments FY1 and FY2 (R10 and R11) set to center and with a 0 V differential input to Q1 and Q2 (beam at center screen) the differential voltage at collectors of Q1 and Q2 is also at 0 V. Under these conditions the parallel combination of R6, R8 and R12 provides the collector load resistance for Q1. The load resistance for Q2 is made up of parallel combination R7, R9 and R13. As the beam is moved vertically so that the base of Q1 becomes more negative, the collector voltage will move in a positive direction. When the collector of Q2 becomes more positive than the wiper of FY2 (R11), CR5 stops conducting, leaving the parallel combination R6 and R8 as the collector load for Q1. As beam movement continues in the same direction CR1 stops conducting leaving R6 as the collector load resistor. The collector load change increases gain from approximately 1 to 6 and 12 respectively. Note that beam movement in this direction does not cause any gain changes of Q2 (CR2 and CR6 remain forward biased). Vertical movement of the beam in the opposite direction causes the gain of Q2 to change from approximately 1 to 6 and to 12 in the same manner as Q1.

8-39. CURRENT AMPLIFIERS (Q5, Q6, Q7, Q8).

The purpose of CR9 and CR10 is to connect the more positive of the collectors voltages (collector of Q1 or collector of Q2) to the base of Q5. As a result, current through Q5 increases symmetrically as the beam is moved vertically. Q6 is the voltage source for Q5.

The X-axis correction current is derived from Q3, Q4, Q7 and Q8 in the same manner as the Y-axis correction current. The X-Y axis correction currents are summed at the collectors of Q5 and Q7.

8-40. FOCUS OUTPUT (A6Q22 through A6Q25).

Transistors Q22 and Q23 function as emitter followers, while Q24 and Q25 are a complementary pair. A feedback circuit is provided through C4 and R102 with C4 providing fast corner adjustment to maintain output pulse fidelity. Slower frequency compensation is accomplished by network C2 and R47. CR13 through CR16 are high current diodes and offer protection for the output amplifiers against arcs and transients. The output of the focus amplifier is applied to focus level translator on the high voltage power supply assembly (A9) where it establishes the operating potential for the CRT focus grid.

8-41. Z-AXIS FOCUS CORRECTION (A6Q9, Q10, Q11).

The purpose of the Z-axis focus correction is to provide a more negative focus voltage as beam current is increased (Z-axis output more positive). This is accomplished by differential amplifier Q9 and Q10. The bias of Q9 is set by focus balance R44, while bias for Q10 is established by focus gain (R43).

As Z-axis output voltage increases, the current through Q11 decreases (see Z-axis schematic on service sheet 4) resulting in less current flow through Q10. Because Q9 and Q10 are connected in a differential amplifier configuration, more current will flow through Q9 and cause a decrease in focus output voltage.

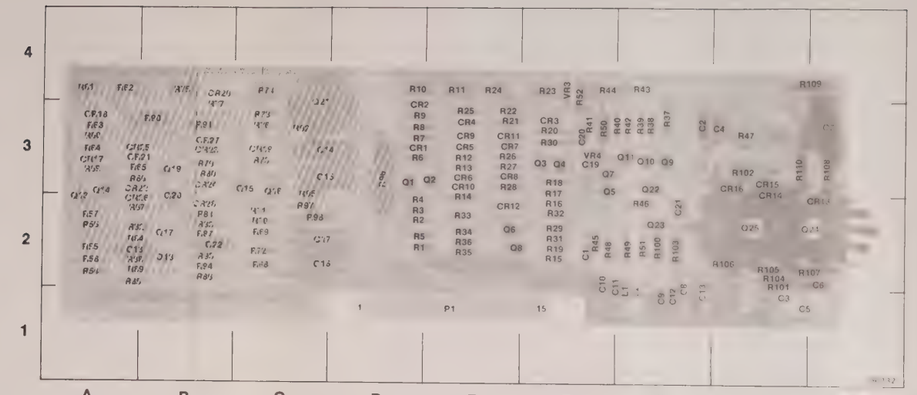

REF DESIG	GRID LOC	REF DESIG	GRID LOC	REF DESIG	GRID LOC	REF DESIG	GRID LOC	REF DESIG	GRID LOC	REF DESIG	GRID LOC	REF DESIG	GRID LOC	REF DESIG	GRID LOC	REF DESIG	GRID LOC
C1	F-2	C22	B-2	CR21	B-3	Q11	G-3	R8	E-3	R29	F-2	R50	F-3	R72	C-3	R93	B-2
C2	G-3	CR1	E-3	CR22	B-3	Q13	A-2	R9	E-3	R30	F-3	R51	G-2	R73	C-3	R93	B-2
C3	H-1	CR2	E-3	CR23	B-3	Q14	A-3	R10	D-4	R31	F-2	R52	F-4	R74	C-4	R94	B-2
C4	H-3	CR3	F-3	CR24	B-3	Q15	C-3	R11	E-4	R32	F-2	R54	A-2	R75	B-4	R95	C-3
C5	I-2	CR4	E-3	CR25	B-3	Q16	C-3	R12	E-3	R33	E-2	R55	A-2	R76	C-3	R96	D-3
C6	I-2	CR5	E-3	CR26	B-2	Q17	B-2	R13	E-3	R34	E-2	R56	A-2	R77	B-3	R97	C-2
C7	I-3	CR6	E-3	CR27	B-3	Q18	B-2	R14	E-3	R35	E-2	R57	A-2	R78	C-3	R98	C-2
C8	G-1	CR7	E-3	CR28	B-2	Q19	B-3	R15	F-2	R36	E-2	R58	A-2	R79	B-3	R100	G-2
C9	G-1	CR8	E-3	L1	G-1	Q20	B-3	R16	F-2	R37	G-3	R59	A-3	R80	B-3	R101	H-2
C10	F-2	CR9	E-3	L2	G-1	Q21	C-4	R17	F-3	R38	G-3	R60	A-3	R81	B-2	R102	H-3
C11	G-2	CR10	E-3	P1	E-1	Q22	G-3	R18	F-3	R39	G-3	R61	A-4	R82	B-2	R103	G-2
C12	G-1	CR11	E-3	Q1	D-3	Q23	G-2	R19	F-2	R40	G-3	R62	A-4	R83	B-2	R104	H-2
C13	G-1	CR12	E-2	Q2	E-3	Q24	I-2	R20	F-3	R41	F-3	R63	A-3	R84	B-2	R105	H-2
C14	C-3	CR13	I-3	Q3	F-3	Q25	H-2	R21	E-3	R42	G-3	R64	A-3	R85	B-2	R106	H-2
C15	C-3	CR14	H-3	Q4	F-3	R1	E-2	R22	E-3	R43	G-4	R65	B-3	R86	B-2	R107	I-2
C16	C-2	CR15	H-3	Q5	F-3	R2	E-2	R23	F-4	R44	F-4	R66	B-3	R87	B-2	R108	I-3
C17	C-2	CR16	H-3	Q6	E-2	R3	E-2	R24	E-4	R45	F-2	R67	B-2	R88	B-2	R109	I-4
C18	B-2	CR17	A-3	Q7	F-3	R4	E-2	R25	E-2	R46	G-2	R68	C-2	R89	B-2	R110	I-3
C19	F-3	CR18	A-3	Q8	E-2	R5	E-2	R26	E-3	R47	H-3	R69	C-2	R90	B-3	VR3	F-4
C20	F-3	CR19	C-3	Q9	G-3	R6	D-3	R27	E-3	R48	F-2	R70	C-2	R91	B-3	VR4	F-3
C21	G-2	CR20	B-4	Q10	G-3	R7	E-3	R28	E-3	R49	G-2	R71	C-2				

Figure 8-14. Part of Focus and Astigmatism Amplifier (A6) Component Locator

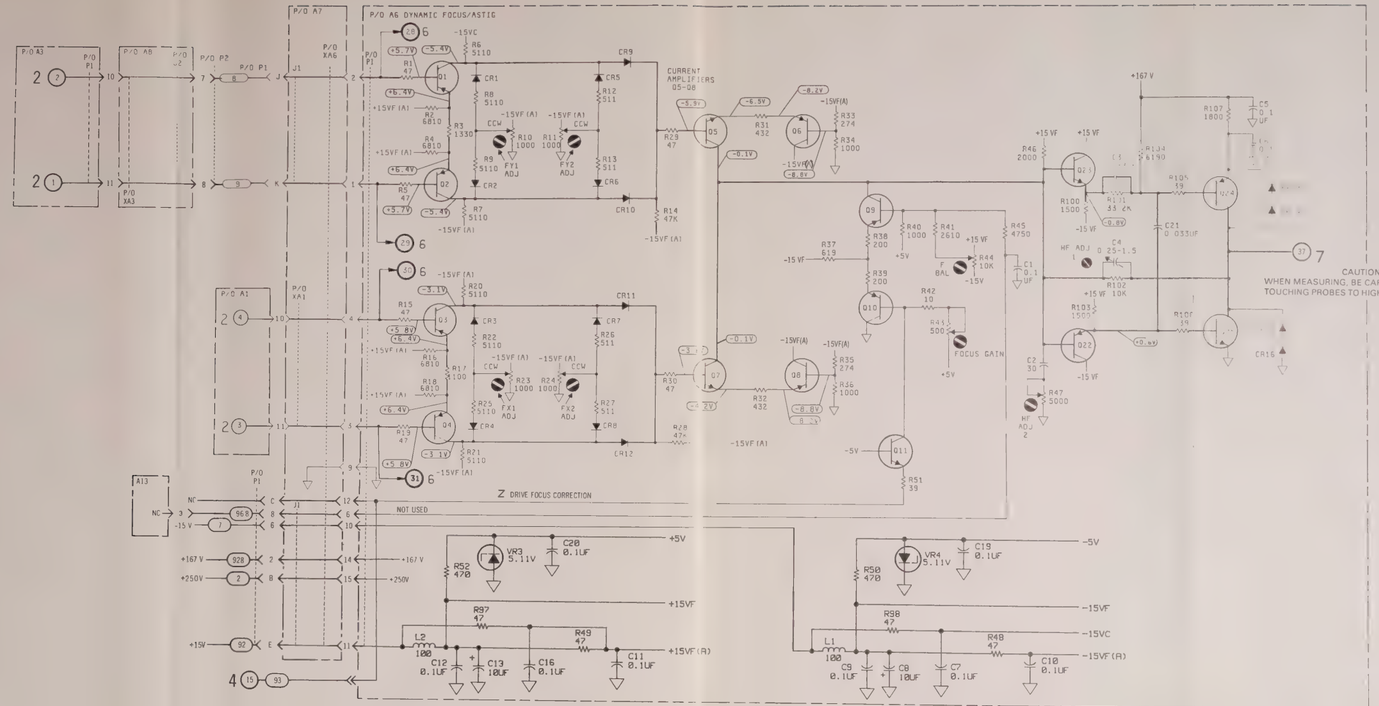

PARTS ON THIS SCHEMATIC		
A6	A7	CHASSIS
C1 6,8-13,16,17,19-21 CR1-16 Q1 11,22-25 R1-52,97,98,100-107, 110 VR3,4 L1,2	J1 XA1, 6	P/O W9

5

Figure 8-15.
Service Sheet 5, Dynamic Focus (A6) Schematic

8-42. SERVICE SHEET 6 PRINCIPLES OF OPERATION.

8-43. DYNAMIC ASTIGMATISM.

The purpose of the dynamic astigmatism circuit is to aid in obtaining an optimum focused display over the entire screen. With the exception of the output amplifiers, the dynamic astigmatism circuit operation is identical to the dynamic focus circuit.

8-44. X-Y INPUT AMPLIFIERS (A6Q13 through A6Q16).

With gain adjustments AY1 and AY2 (R61 and R62) set to midrange and with a 0 V differential input applied to Q13 and Q14 (beam at center screen) the differential voltage at the collectors of Q13 and Q14 is also 0 V. Under these conditions the parallel combination of R59, R60 and R65 provides the collector load resistance for Q13. The collector load resistance for Q14 is made up of the parallel combination R64, R63, R66. As the beam is moved vertically so that the base of Q13 becomes more negative, the collector voltage will move in a positive direction. When the collector of Q13 becomes more positive than the wiper of AY2 (R62), CR21 stops conducting leaving the parallel combination of R59 and R60 as the collector load for Q13. As beam movement continues in the same direction, CR17 stops conducting leaving R59 as the collector load resistor. This collector load change increases gain from approximately 1 to 6 and to 12 respectively. Note that beam movement in this direction does not cause any gain changes of Q14 (CR18 and CR22 remain forward biased).

Vertical movement of the beam in the opposite direction causes the gain of Q14 to change from approximately 1 to 6 and to 12 in the same manner as Q13.

8-45. CURRENT AMPLIFIERS (A6Q17 through A6Q20).

The purpose of CR25 and CR26 is to connect the more positive of the collector voltages (collector of Q13 or collector of Q14) to the base of Q17. As a result, current through Q17 increases symmetrically as the beam is moved vertically. Q18 is the voltage source for Q17.

The X-axis correction current is derived from Q15, Q16, Q19 and Q20 in the same manner as the Y-axis correction current except in the opposite polarity. The Y and X-axis correction currents are summed at the collector of Q17 and Q19.

8-46. ASTIGMATISM OUTPUT AMPLIFIER (A6Q21).

Common base amplifier Q21, astigmatism balance R90, and collector load resistor R96 make up the astigmatism output amplifier. The astigmatism correction currents are converted to a signal voltage which is applied to a grid in the CRT electron gun. Astigmatism balance R90 sets thd dc bias current for Q21.

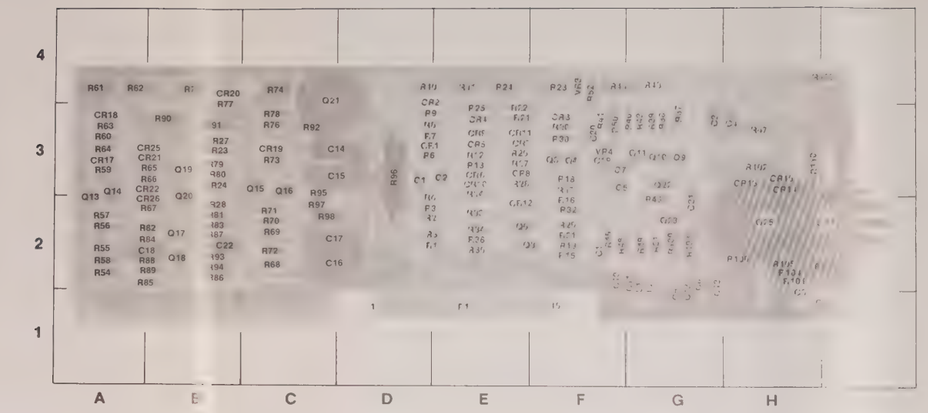

REF DESIG	GRID LOC	REF DESIG	GRID LOC	REF DESIG	GRID LOC	REF DESIG	GRID LOC	REF DESIG	GRID LOC	REF DESIG	GRID LOC	REF DESIG	GRID LOC	REF DESIG	GRID LOC	REF DESIG	GRID LOC
C1	F-2	C22	B-2	CR21	B-3	Q11	G-3	R8	E-3	R29	F-2	R50	F-3	R72	C-2	R92	C-3
C2	G-3	CR1	E-3	CR22	B-3	Q13	A-2	R9	E-3	R30	F-3	R51	G-2	R73	C-3	R93	B-2
C3	H-1	CR2	E-3	CR23	B-3	Q14	A-3	R10	D-4	R31	F-2	R52	F-4	R74	C-4	R94	B-2
C4	H-3	CR3	F-3	CR24	B-3	Q15	C-3	R11	E-4	R32	F-2	R54	A-2	R75	B-4	R95	C-3
C5	I-2	CR4	E-3	CR25	B-3	Q16	C-3	R12	E-3	R33	E-2	R55	A-2	R76	C-3	R96	D-3
C6	I-2	CR5	E-3	CR26	B-2	Q17	B-2	R13	E-3	R34	E-2	R56	A-2	R77	B-3	R97	C-2
C7	I-3	CR6	E-3	CR27	B-3	Q18	B-2	R14	E-3	R35	E-2	R57	A-2	R78	C-3	R98	C-2
C8	G-1	CR7	E-3	CR28	B-2	Q19	B-3	R15	F-2	R36	E-2	R58	A-2	R79	B-3	R100	G-2
C9	G-1	CR8	E-3	L1	G-1	Q20	B-3	R16	F-2	R37	G-3	R59	A-3	R80	B-3	R101	H-2
C10	F-2	CR9	E-3	L2	G-1	Q21	C-4	R17	F-3	R38	G-3	R60	A-3	R81	B-2	R102	H-3
C11	G-2	CR10	E-3	P1	E-1	Q22	G-3	R18	F-3	R39	G-3	R61	A-4	R82	B-2	R103	G-2
C12	G-1	CR11	E-3	Q1	D-3	Q23	G-2	R19	F-2	R40	G-3	R62	A-4	R83	B-2	R104	H-2
C13	G-1	CR12	E-2	Q2	E-3	Q24	I-2	R20	F-3	R41	F-3	R63	A-3	R84	B-2	R105	H-2
C14	C-3	CR13	I-3	Q3	F-3	Q25	H-2	R21	E-3	R42	G-3	R64	A-3	R85	B-2	R106	H-2
C15	C-3	CR14	H-3	Q4	F-3	R1	E-2	R22	E-3	R43	G-4	R65	B-3	R86	B-2	R107	I-2
C16	C-2	CR15	H-3	Q5	F-3	R2	E-2	R23	F-4	R44	F-4	R66	B-3	R87	B-2	R108	I-3
C17	C-2	CR16	H-3	Q6	E-2	R3	E-2	R24	E-4	R45	F-2	R67	B-2	R88	B-2	R109	I-4
C18	B-2	CR17	A-3	Q7	F-3	R4	E-2	R25	E-2	R46	G-2	R68	C-2	R89	B-2	R110	I-3
C19	F-3	CR18	A-3	Q8	E-2	R5	E-2	R26	E-3	R47	H-3	R69	C-2	R90	B-3	VR3	F-4
C20	F-3	CR19	C-3	Q9	G-3	R6	D-3	R27	E-3	R48	F-2	R70	C-2	R91	B-3	VR4	F-3
C21	G-2	CR20	B-4	Q10	G-3	R7	E-3	R28	E-3	R49	G-2	R71	C-2				

Figure 8-16. Part of Focus and Astigmatism Amplifier (A6) Component Locator

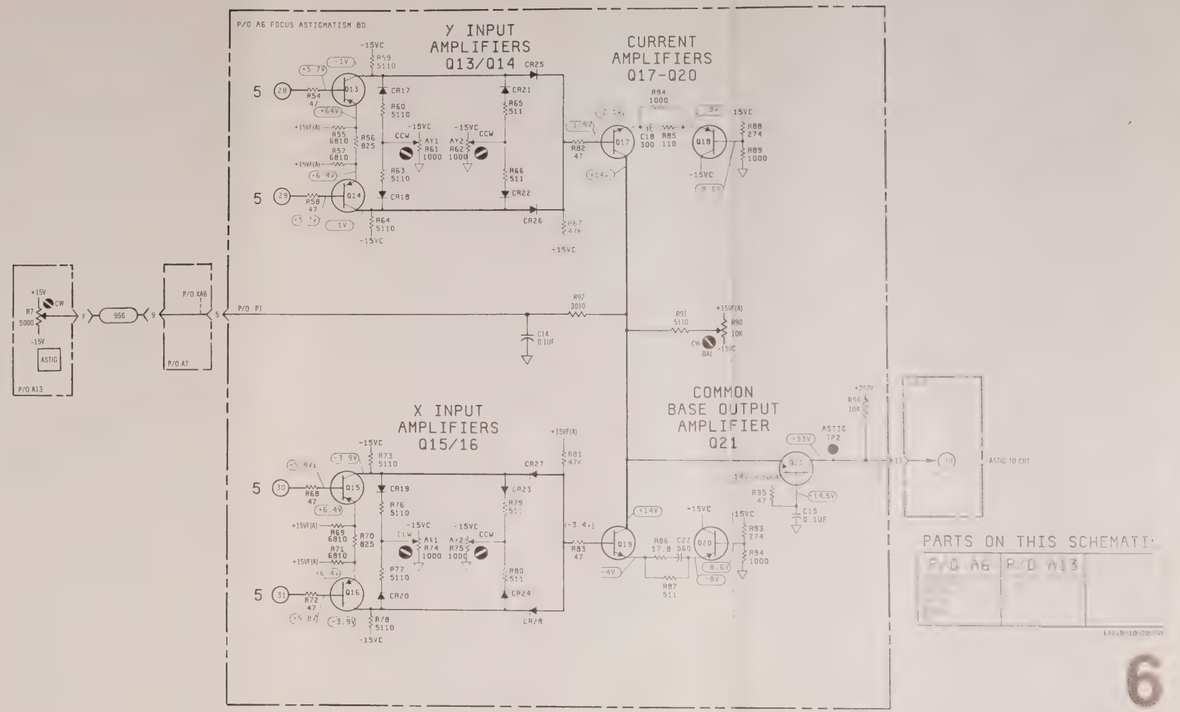

6

Figure 8-17
Service Sheet 6, Dynamic Astigmatism (A6) Schematic

8-47. SERVICE SHEET 7 PRINCIPLES OF OPERATION.

8-48. OSCILLATOR POWER SUPPLY (A9CR16, A9VR1, Q4).

The oscillator power supply provides the high voltage oscillator Q5 with a voltage source stabilized from line voltage fluctuations. The full wave bridge, CR16, rectifies the ac secondary from power transformer T1. VR1 sets the base voltage for Q4, a darlington transistor acting as an emitter follower for its base voltage. The emitter voltage is approximately +21 V, two diode drops from the base voltage.

8-49. HIGH VOLTAGE OSCILLATOR (A9Q5, Primary of A9T1).

The high voltage oscillator operates as a class C oscillator (conduction less than 50% of the oscillator period). The voltage across the collector winding (pins 3 and 4 of T1) is coupled through the transformer T1 to the feedback winding (pins 1 and 2 of T1) to provide base drive for the oscillator. CR3, CR4, CR5, and R12 provide reverse bias protection for Q5. The series resonant circuit C9, L2 provide a low impedance termination for the feedback winding at the oscillator frequency (approximately 20 kHz).

8-50. CATHODE SUPPLY (A9CR7, Secondary of A9T1).

The cathode voltage is derived from the high ac voltage present at pin 8 of T1 with respect to pin 5 of T1. CR7 is the rectifier and C13, C14 and R3 provide the filtering for the cathode supply.

8-51. HIGH VOLTAGE REGULATOR (A9U1)

For the following discussion refer to figure 8-18.

High voltage regulator comparator amplifier, U1, controls the bias of oscillator Q5. Pin 2 of U1 is at dc ground, 0 V, and is used as the amplifier's reference. The other input, pin 3, is at the nominal 0 V node of a voltage divider consisting of R3, R4 and R24. The +250 V supply, at R3, is the reference for the high voltage supply. The cathode voltage is determined by the following formula

$$VK = \frac{-250}{R3+R4}(R24) = -4521\ V \pm 2\%\ (4530\text{-}4610)$$

when $R3+R4 = 1.659\ M\Omega$
$R24 = 30\ M\Omega$

When the regulator circuit is stable, the CRT cathode voltage will offset the +250 V reference and provide a nominal 0 V at U1 pin 3. Increased beam intensity (cathode current) will cause the cathode voltage to try to drop (go positive). This will cause the voltage at U1 pin 3 to go positive. The output current of U1 will increase and increase the conduction of Q5 until the cathode voltage returns to its nominal value and the input at U1 pin 3 returns to 0 V. This action will reverse in the event of a decreased current demand and the cathode voltage increases (goes negative).

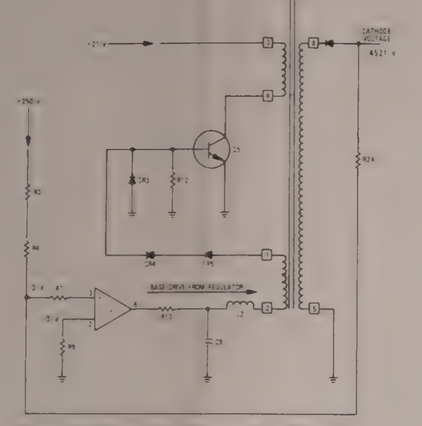

Figure 8-18. Simplified Schematic of High Voltage Regulator Circuit

8-52. HIGH VOLTAGE SHUTDOWN (A9U2, A9Q3, A9U1).

8-53. PURPOSE.

The purpose of the high voltage shutdown circuit is to prevent excessive accelerating potential from being applied to the CRT. If the cathode voltage exceeds -4750 V, it may be possible for the CRT in this instrument to emit x-rays exceeding the internationally recognized maximum allowable level (0.5 mR/hr at 5 cm from the surface of the instrument).

8-54. CAUSES OF X-RAY EMISSIONS.

X-ray radiation results from high velocity electrons striking a target, in this case the inside surface of the CRT. The magnitude of radiation depends on the electron density (beam current) and the total accelerating voltage (cathode + post accelerator voltage).

8-55. PREVENTING X-RAY EMISSIONS.

1. Control of electron density (beam current) is accomplished by proper alignment of the intensity limit circuit, which limits front panel INTENSITY adjustment. (See Section V, paragraph 5-14 for intensity limit adjustment.)

2. Since the post accelerator voltage is determined by the cathode voltage, total accelerating potential can be controlled by limiting the cathode voltage to the acceptable limits. The high voltage shutdown circuit limits cathode voltage to -4750 V. (See Section V, paragraph 5-12 for high voltage shutdown calibration.)

When all affected circuits have been properly calibrated, x-ray emissions from this instrument will not exceed 0.2 mR/hr.

8-56. PRINCIPLES OF OPERATION.

Refer to figure 8-19 for the following discussion.

The difference between cathode voltage and the +5.11 V reference (VR3) induces current flow through R27 and network R18 through R22. Cathode voltages between -4400 V and -4600 V (normal operating potential) produce a positive voltage at pin 2 U2.

The output of U2 (pin 6) is negative and Q3 is reversed biased. Cathode voltages between -4650 V and -4750 V produce a negative voltage at U2 pin 2. The output of U2 pin 6 changes to a positive voltage, triggering Q3. When Q3 is conducting, U1 pin 7 is grounded, which reverse biases the high voltage oscillator Q5, preventing oscillations. The cathode voltage drops to 0 V and remains at 0 V until the instrument is turned off and the problem is corrected.

8-57. TROUBLESHOOTING.

If trouble is suspected, visually inspect the instrument. Look for loose or burned components that might suggest a source of trouble. Verify that all circuit board connections are making good contact. If no obvious trouble is found, check table 8-3 for symptoms and probable causes.

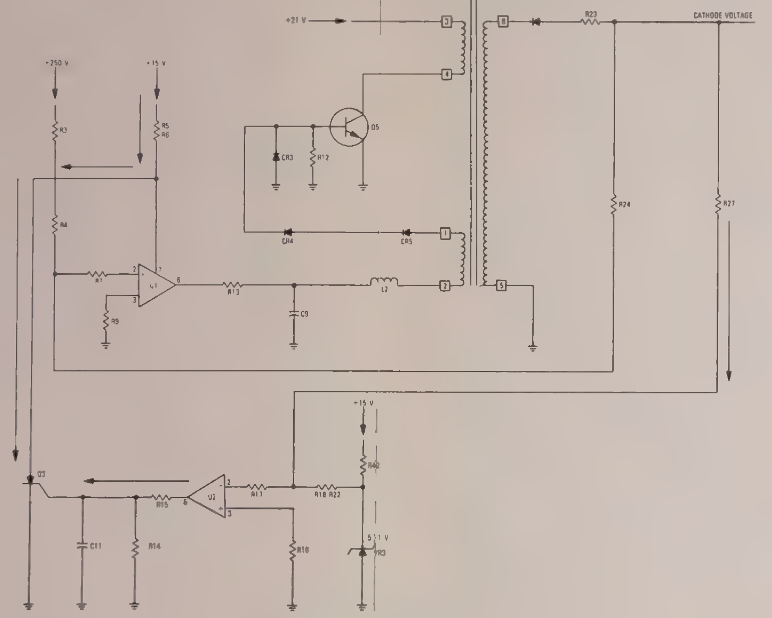

Figure 8-19. Simplified Schematic of High Voltage Shutdown Circuit

Table 8-3. Troubleshooting Hints for High Voltage Shutdown Circuit

Symptom	Probable Cause
NO CATHODE VOLTAGE (A9TP1 is Positive)	1. Excess cathode voltage generated, high voltage oscillator Q5 is reversed bias. a. +250 V power supply is too high or out of regulation b. A9R3/R4 changed value c. A9U1 shorted, or improperly installed d. A9CR4/CR5 are shorted 2. High voltage shutdown occurred at less than -4650 V a. reference voltage (A9VR3) too low b. changed value of A9R18 through A922 c. changed value of A9R27 d. U2 shorted to +15 V supply e. A9CR12 shorted f. open circuit between U2 pin 2 and junction of A9R42 and A9VR3.
High voltage shutdown does not occur between -4650 V and -4750 V (A9TP1) is negative	1. A9R27 is open or changed value to more than 30 MΩ 2. A9VR3 is open or high 3. One of the resistors from A9R18 through A9R22 changed value (lower than specified) 4. A9C12 shorted to ground 5. A9U2 shorted to ground or to -15 V supply 6. A9CR6 shorted to ground 7. A9C11 shorted to ground

8-58. CRT CIRCUITS.

8-59. GRID LEVEL TRANSLATOR (A9CR9, A9CR10, A9CR11, A9CR12).

The grid supply provides CRT grid bias with provision to compensate for CRT cutoff between different CRT's. The large sinewave at A9T1 pin 6 is coupled through A9R25 and A9C16 (isolation network) to junction of A9CR11 and A9CR12. A9CR11 clips the negative going portion of the waveform at a voltage equal to the output of the Z-axis amplifier. A9CR12 clips the positive going portion of the waveform at a voltage determined by the setting of the intensity limit adjust (A9R38). The peak to peak amplitude at the junction of A9CR11 and A9CR12 is therefore equal to the difference between the intensity limit voltage and the output of the Z-axis amplifier. This signal is coupled through A9C19 to the junction of A9CR9 and A9CR10 which is clamped to the cathode voltage of A9CR9. A9CR10 charges A9C20 to the cathode voltage minus the peak to peak amplitude of the signal at the junction of A9CR11 and A9CR12. This voltage is then applied to the CRT grid. Fast transitions from the Z-axis output are directly coupled to the CRT grid via A5C28, while slower transitions are coupled through the grid level translator.

8-60. FOCUS LEVEL TRANSLATOR (A9CR8, A9CR13, A9CR14, A9CR15).

The focus level translator provides the operating potential for the CRT focus grid. The large sinewave at A9T1 pin 6 is coupled through A9C17 and A9R26 (isolation network) to junction of A9CR8 and A9CR15. A9CR15 clips the negative going portion of the waveform at a voltage equal to the output of the focus amplifier. A9CR8 clips the positive going portion of the waveform at a voltage determined by A9VR4 and A9VR5 (136 V). The peak to peak amplitude at the junction of A9CR8 and A9CR15 is therefore equal to the difference between the voltage established by A9VR4, A9VR5 and the output voltage of the focus amplifier. This signal is coupled through A9C23 to the junction of A9CR13 and A9CR14. A9CR13 then clamps the output voltage to a level established by the focus limit adjust (A9R30) and the front panel FOCUS control. A9CR14 charges A9C24 to the reference voltage established by the focus limit adjustment and the focus control minus the peak to peak amplitude at the junction of A9CR8 and A9CR15. This voltage is then applied to the CRT focus grid.

8-61. FILAMENT AND PA SUPPLY (P/O T1, A10).

The filament supply is provided by a separate secondary winding of T1. The supply voltage should range from 5.6 V to 5.8 V. The voltage should only be measured with an isolated R.M.S. meter rated at 5 kV or better.

The multiplier assembly (A10) supplies the post accelerator voltage for the CRT. Part of the secondary of T1 is applied to high voltage multiplier assembly A10 where the voltage is multiplied approximately eight times, rectified, filtered, and then applied to the post acclerator of the CRT.

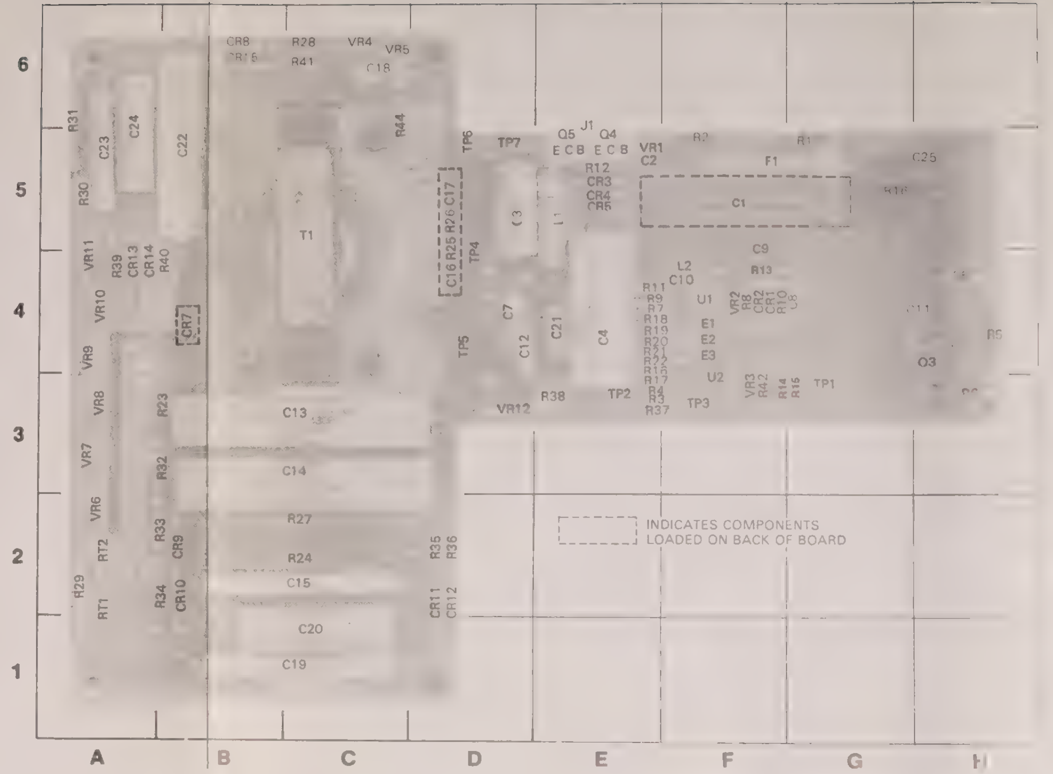

REF DESIG	GRID LOC	REF DESIG	GRID LOC	REF DESIG	GRID LOC	REF DESIG	GRID LOC	REF DESIG	GRID LOC	REF DESIG	GRID LOC	REF DESIG	GRID LOC	REF DESIG	GRID LOC	REF DESIG	GRID LOC
C1	F-5	C15	C-2	CR2	F-4	CR17	G-4	R2	F-5	R16	E-3	R30	A-5	R43	G-4	U2	[illegible]
C2	D-5	C16	[illegible]	CR3	E-5	CR18	G-3	[illegible]	[illegible]	[illegible]	[illegible]	[illegible]	[illegible]	[illegible]	[illegible]	VR1	[illegible]
C3	D-5	C17	D-5	CR4	E-5	CR16	G-5	R4	E-3	R18	E-4	R32	A-3	RT1	A-1	VR2	[illegible]
C4	E-4	C18	C-6	CR5	E-5	E1	F-4	R5	H-4	R19	E-4	R33	A-2	RT2	A-2	VR3	F[illegible]
C5	G-4	C19	C-1	CR6	G-3	E2	F-4	R6	H-3	R20	E-4	R34	A-1	T1	C-5	VR4	C[illegible]
C6	H-3	C20		CR7	B-4	E3	F-4	[illegible]	[illegible]	[illegible]	[illegible]	[illegible]	[illegible]	[illegible]	[illegible]	VR5	[illegible]
C7	D-4	C21	E-4	CR8	B-6	F1	F-5	R8	F-4	R22	F-4	R36	D-2	TP2	E-3	VR6	[illegible]
C8	G-4	C22	B-5	CR9	B-2	J1	E-5	R9	E-4	R23	A-3	R37	E-3	TP3	F-3	VR7	[illegible]
C9	E-5	C23	A-5	CR10	B-1	L1	E-5	R10	G-4	R24	C-2	R38	F-3	TP4	D-4	VR8	[illegible]
C10	F-4	C24	[illegible]	CR11	D-1	L2	E-4	[illegible]	[illegible]	[illegible]	[illegible]	[illegible]	[illegible]	[illegible]	[illegible]	VR9	[illegible]
C11	G-4	C25	G-5	CR12	D-1	Q3	G-4	R12	E-5	R26	D-5	R40	A-4	TP6	D-5	VR10	A[illegible]
C12	D-3	C26	G-4	CR13	A-4	Q4	F-5	R13	F-4	[illegible]	[illegible]	R41	C-6	TP7	[illegible]	VR11	[illegible]
C13	C-3	C27	[illegible]	CR14	A-4	Q5	[illegible]	R14	[illegible]	[illegible]	[illegible]	[illegible]	[illegible]	[illegible]	[illegible]	VR12	[illegible]
C14	C-3	CR1	F-4	CR15	B-6	R1	G-5	R15	F-3	R29	[illegible]						

Figure 8-20. High Voltage Power Supply (A9) Component Locator

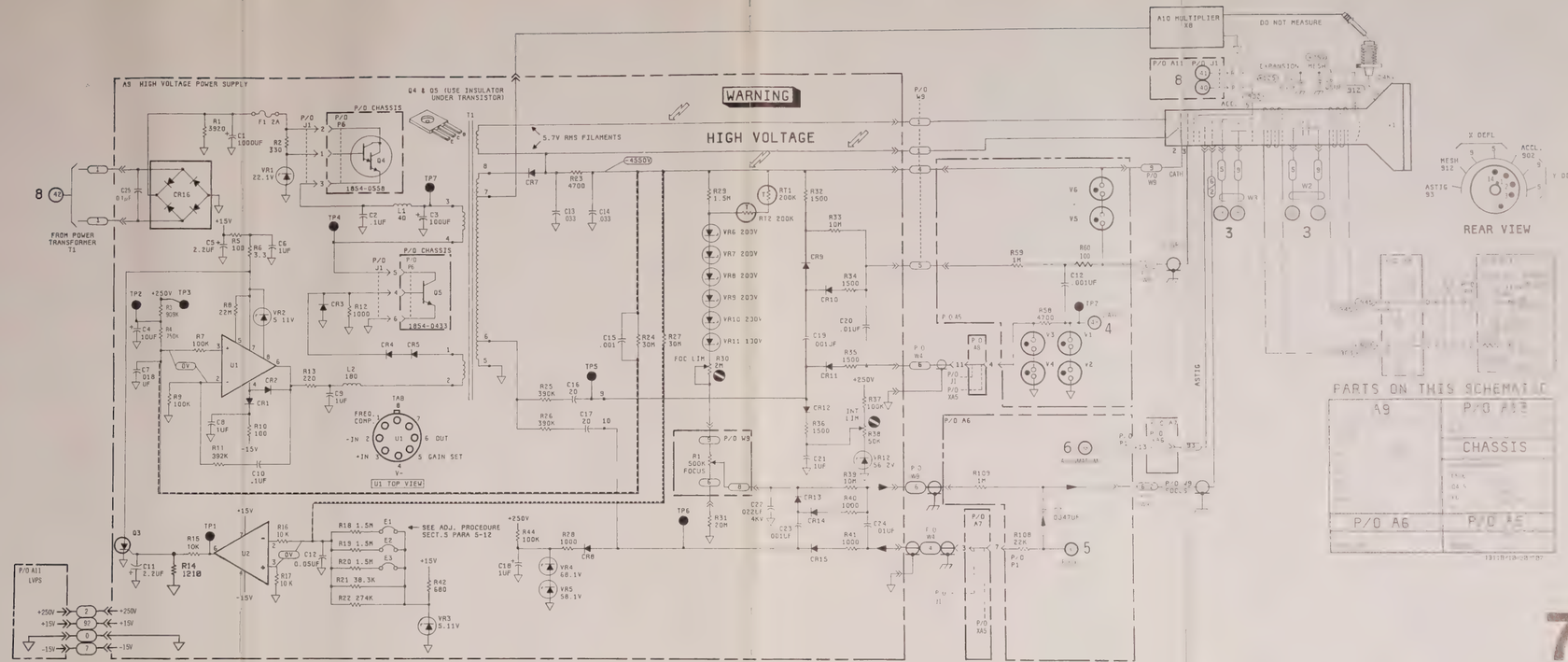

7

Figure 8-21.
Service Sheet 7, High Voltage Power Supply (A9) Schematic

8-62. SERVICE SHEET 8 PRINCIPLES OF OPERATION.

8-63. +250 V SUPPLY (A11CR1 through A11CR4, A11Q1 through A11R3, Q2).

A11CR1 through A11CR4 rectify the ac voltage from secondary of T1 to provide the unregulated dc voltage for the +250 V supply. Driver A11Q1 provides base current for series regulator Q1. Differential sensor amplifier, A11Q2 and A11Q3, compares the +250 V supply output voltage with a reference voltage determined by A11V1. A11Q3 also provides thermo compensation and allows output voltage adjustment in conjunction with divider network A11R1, A11R12, and A11R13.

An increase in output voltage will cause A11Q2 to conduct harder and therefore decrease base drive to regulator driver A11Q1. Less current flow through the driver will cause series regulator to conduct less and therefore decrease the output voltage. The series combination of A11VR3 and A11VR4 sets the operating potential for the CRT accelerator while A11VR4 determines the supply voltage for the CRT expansion mesh.

8-64. −15 V SUPPLY (A11CR9 through A11CR12, A6Q6, A6Q7, Q3).

A11CR9 through A11CR12 rectify the ac voltage from secondary of T1 to provide the unregulated dc voltage for the −15 V supply. A11Q6 provides base current for series regulator Q3. Base current for driver A11Q6 is provided by sensor amplifier A11Q7. A11VR5 provides the reference voltage for the −15 V supply. Output voltage changes are coupled directly to base of A11Q7 through A11VR5. A 1 V change in output voltage causes a 1 V change in emitter voltage. Output voltage changes are coupled proportionally to cathode of A11CR19 by divider network A11R28, A11R29 and A11R30. A 1 V change in output voltage causes an approximate change of .5 V at the cathode of A11CR19.

A decrease in supply output voltage will increase current through A11CR19 and decrease base current supplied to the sensor amplifier.

As a result, collector voltage of A11Q7 will increase, turning driver A11Q6 and series regulator Q3 on harder. The output voltage will increase restoring the supply to its proper output voltage.

8-65. +15 V SUPPLY (A11CR5 through A11CR6, A6Q4, A6Q5, Q2).

Circuit operation of the +15 V supply is identical to the −15 V. A11CR5 through A11CR8 make up the rectifier bridge. Driver A11Q4 supplies base current to series regulator Q2. Base current for the driver is supplied by sensor amplifier A11Q5. Reference voltage for this power supply is established by the −15 V.

A decrease in supply output voltage causes an increase in current flow through A11CR16, thereby decreasing current through sensor amplifier A11Q5. The resultant increase in collector voltage of the sensor amplifier will induce more current flow through driver A11Q4 and series regulator Q2. The output voltage will increase, restoring the power supply to its proper output voltage.

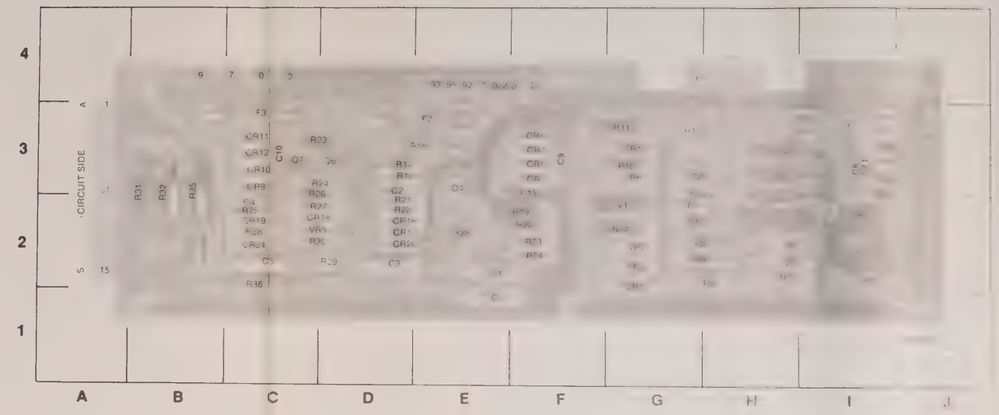

REF DESIG	GRID LOC	REF DESIG	GRID LOC	REF DESIG	GRID LOC	REF DESIG	GRID LOC	REF DESIG	GRID LOC	REF DESIG	GRID LOC	REF DESIG	GRID LOC	REF DESIG	GRID LOC	REF DESIG	GRID LOC
C1	G-2	[illegible]	[illegible]	[illegible]	C-3	[illegible]	[illegible]	Q4	E-3	[illegible]	H-2	[illegible]	D-3	R26	C-2	[illegible]	[illegible]
C2	D-2	[illegible]	I-3	[illegible]	C-3	[illegible]	[illegible]	Q5	E-2	R8	H-2	[illegible]	D-3	R27	C-2	R36	[illegible]
C3	D-2	[illegible]	I-3	[illegible]	C-3	F1	[illegible]	Q6	D-3	[illegible]	H-3	[illegible]	F-2	R28	C-2	[illegible]	[illegible]
C4	C-2	[illegible]	I-3	[illegible]	G-2	F2	[illegible]	Q7	C-3	[illegible]	G-3	[illegible]	F-2	R29	D-2	[illegible]	[illegible]
C5	C-2	R4	I-3	[illegible]	G-2	F3	[illegible]	R1	I-2	[illegible]	G-3	[illegible]	D-2	R30	C-2	[illegible]	[illegible]
C6	E-2	[illegible]	F-3	[illegible]	G-3	[illegible]	[illegible]	R2	H-2	[illegible]	G-3	[illegible]	D-2	R31	B-2	VR3	[illegible]
C7	E-1	[illegible]	F-3	[illegible]	D-2	[illegible]	[illegible]	R3	H-2	[illegible]	H-3	[illegible]	C-3	R32	B-2	VR4	[illegible]
C8	I-3	[illegible]	F-3	[illegible]	D-2	Q1	[illegible]	R4	H-2	[illegible]	G-2	[illegible]	C-3	[illegible]	F-2	[illegible]	[illegible]
C9	F-3	[illegible]	F-3	[illegible]	C-2	Q2	[illegible]	R5	I-2	[illegible]	F-2	[illegible]	C-2	R34	F-2	VR6	[illegible]
C10	C-3	[illegible]	C-2	[illegible]	C-2	Q3	[illegible]	R6	G-3	[illegible]	D-3						

Figure 8-22. Low Voltage Power Supply (A11) Component Locator

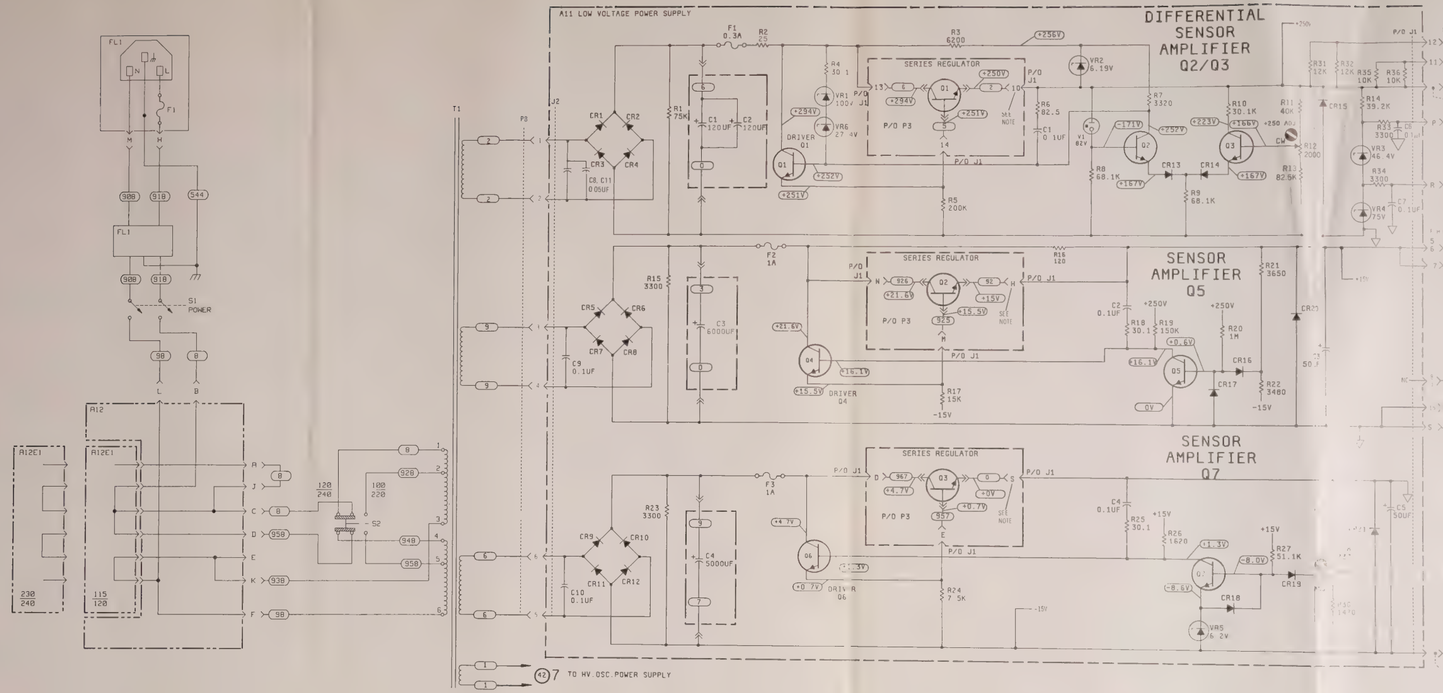

8

Figure 8-23
Service Sheet 8, Low Voltage Power Supply (A11) Schematic

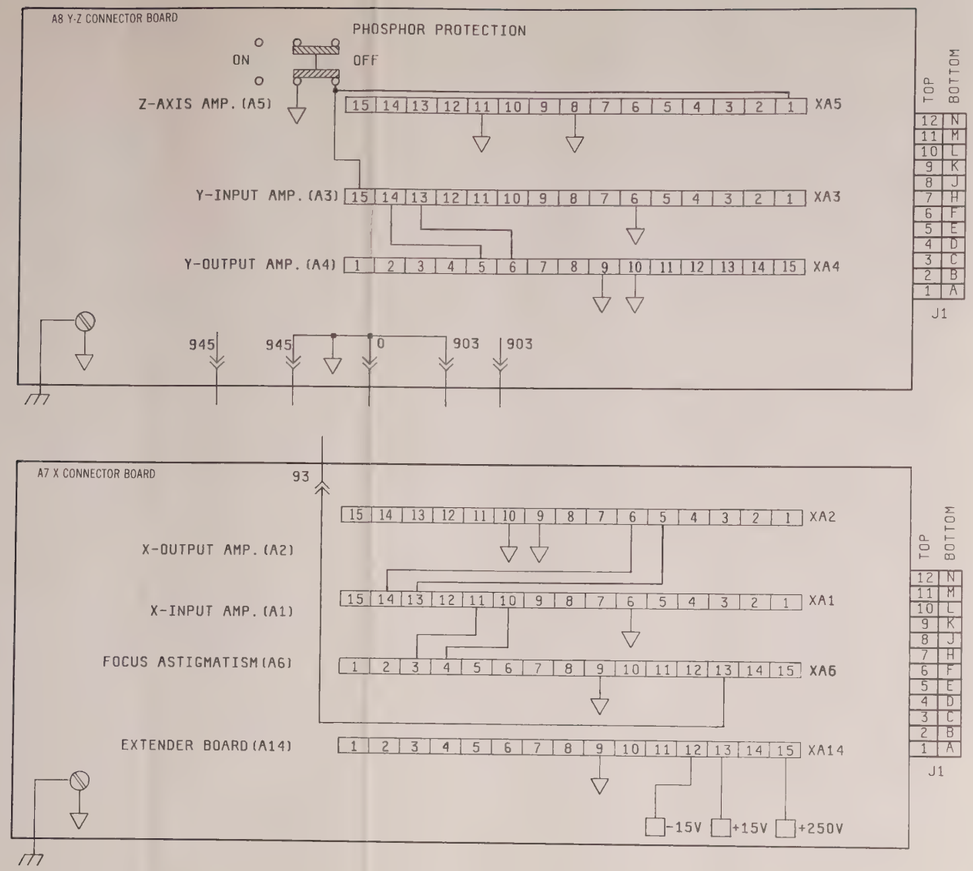

A7, X CONNECTOR BOARD WIRING

CONNECTION LIST

FROM	TO	TO	TO	TO		
A7 J1	XA1	XA2	XA6	XA14	SIGNAL	CONN. WIRE NO.
1				15	+250V	2
2			14		+167V	928
3			7		FOC OTPT	COAX(4)
4		13			+15V	92
5	3				+15V	92
6			10		-15V	7
7	4				-15V	7
8			6		FOCUS CONTR	968
9			5		ASTIG CONTR	956
10	15				PHOS PRTECT	914
11	5					
12	7				X GAIN	938
A		15			+250V	2
B			15		+250V	2
C			12			
D				13	+15V	92
E			11		+15V	92
F				12	-15V	7
H		12			-15V	7
J			2		FOCUS CORR.	8
K			1		FOCUS CORR.	9
L						
M	8					
N	9				X POSN.	936
	6	9	9	9	GROUND	
		10			GROUND	

TOP SIDE / BOTTOM SIDE

X-INPUT AMP
X-OUTPUT AMP
FOCUS & ASTIG EXTENDER

A8, Y-Z CONNECTOR BOARD WIRING

CONNECTION LIST

FROM	TO	TO	TO	TO			
A8 J1	XA3	XA4	XA5	SQ. PIN	SIGNAL	CONN. WIRE NO.	
1		15			+250V	2	
2							
3	9				Y-POSITION	934	
4	5						
5	7				Y-GAIN	913	
6	8						
7	10				FOCUS CORR	8	
8	11				FOCUS CORR	9	
9			13		+15V	92	
10			10		INTEN. CTRL	935	
11			4		Z OUTPT	COAX(6)	
12			15		[illegible]		
A							
B							
C				903	ORTHO	903	
D				945	TRACE ALGN	945	
E		13			+15V	92	
F	3				+15V	92	
H		12			-15V	7	
J	4				-15V	7	
K			12		-15V	7	
L			6				
M	15		1		PHOS.PRTCT	914	
N							
	6	9	8		GROUND		
	10	11			GROUND		

TOP SIDE / BOTTOM SIDE

Y-INPUT AMP
Y-OUTPUT AMP
Z AMPLIFIER

1311B-10-23-SB

Figure 8-24. Left and Right Connector Board Wiring Diagram A7, A8

Product Line Sales Support Key

Key	Product Line
A	Analytical
CM	Components
C	Computer Systems Sales only
CH	Computer Systems Hardware Sales & Services
CS	Computer Systems Software Sales & Services
E	Electronic Instruments & Measurement Systems
M	Medical Products
MP	Medical Products Primary SRO
MS	Medical Products Secondary SRO
P	Personal Computing Products
*	Sales only for specific product line
**	Support only for specific product line

IMPORTANT: These symbols designate general product line capability. They do not insure sales or support availability for all products within a line at all locations. Contact your local sales office for information regarding locations where HP support is available for specific products.

HP distributors are printed in italics.

ANGOLA
Telebita
Empresa Técnica de Equipamentos Eléctricos, S.A.R.L.
R. Barbosa Rodrigues 41-1 DT
Caixa Postal 6487
LUANDA
Tlx: 3515 3516
E,M,P

ARGENTINA
Hewlett-Packard Argentina S.A.
Avenida Santa Fe 2035
Martinez 1640 **BUENOS AIRES**
Tel: 798-5735, 792-1293
Telex: 122443 AR CIGY
Cable: HEWPACKARG
A,E,CH,CS,P

Biotron S.A.C.I.y.M.
Av. Paseo Colon 221, 9 Piso
1399 BUENOS AIRES
Tel: 30-4846, 30-1851, 30-8384
Telex: 17595 BIONAR
M

Fate S.A.I.C.I./Electronica
Venezuela 1326
1095 BUENOS AIRES
Tel: 379026, 379027
Telex: 18137, 22754 ALVAR AR
P

AUSTRALIA
Adelaide, South Australia Office
Hewlett-Packard Australia Pty Ltd
153 Greenhill Road
PARKSIDE S.A. 5063
Tel: 272-5911
Telex: 82536
Cable: HEWPARD Adelaide
A*, CH,CM,E,MS,P

Brisbane, Queensland Office
Hewlett-Packard Australia Pty Ltd
5th Floor
Teachers Union Building
495-499 Boundary Street
SPRING HILL, Queensland 4000
Tel: 229-1544
Telex: 42133
Cable: HEWPARD Brisbane
A,CH,CM,E,MS,P

Canberra, Australia Capital Territory Office
Hewlett-Packard Australia Pty Ltd
121 Wollongong Street
FYSHWICK, A.C.T. 2609
Tel: 80 4244 Telex: 62650
Cable: HEWPARD Canberra
A*,CH,CM,E,MS,P

Melbourne, Victoria Office
Hewlett-Packard Australia Pty Ltd
31-41 Joseph Street
BLACKBURN, Victoria 3130
Tel: 89 6351
Telex: 31-024
Cable: HEWPARD Melbourne
A,CH,CM,CS,E,MS,P

Perth, Western Australia Office
Hewlett-Packard Australia Pty Ltd
141 Stirling Highway
NEDLANDS, W.A. 6009
(effective 28 Sept. 1981
261 Stirling Highway
CLAREMONT W.A. 6010)
Tel: 386 5455
Telex: 93859
Cable: HEWPARD Perth
A,CH,CM,E,MS,P

Sydney, New South Wales Office
Hewlett-Packard Australia Pty Ltd
17-23 Talavera Road
P.O. Box 308
NORTH RYDE, N.S.W. 2113
Tel: 887-1611
Telex: 21561
Cable: HEWPARD Sydney
A,CH,CM,CS,E,MS,P

AUSTRIA
Hewlett-Packard Ges.m.b.h.
Grottenhofstrasse 94
Verkaufsbüro Graz
A-8052 **GRAZ**
Tel: 21-5-66
Telex: 32375
CH,CM,E*
Hewlett-Packard Ges.m.b.h.
Wehrstrasse 29
P.O. Box 7
A-1205 **VIENNA**
Tel: (222) 35-16-210
Telex: 135823/135066
A,CH,CM,CS,E,MS,P

BAHRAIN
Green Salon
P.O. Box 557
BAHRAIN
Tel: 25503-250950
Telex: 84419
P

Wael Pharmacy
P.O. Box 648
BAHRAIN
Tel: 256123
Telex: 8550 WAEL GJ
M

BELGIUM
Hewlett-Packard Belgium S.A./N.V.
Blvd de la Woluwe, 100
Woluwedal
B-1200 *BRUSSELS*
Tel: (02) 762-32 00
Telex: 23 494 paloben bru
A,CH,CM,CS,E,MP,P

BRAZIL
Hewlett-Packard do Brasil I.e.C. Ltda.
Alameda Rio Negro, 750
ALPHAVILLE 06400 Barueri SP
Tel: 421-1311
Telex: 011 33872
Cable: HEWPACK Sao Paulo
A,CH,CM,CS,E,MS
Hewlett-Packard do Brasil I.e.C. Ltda.
Avenida Epitacio Pessoa, 4664
22471 **RIO DE JANEIRO**-RJ
Tel: 286-0237
Telex: 021-21905 HPBR-BR
Cable: HEWPACK Rio de Janeiro
A,CH,CM,E,MS,P*

CANADA
Alberta
Hewlett-Packard (Canada) Ltd.
210, 7220 Fisher Street S.E.
CALGARY, Alberta T2H 2H8
Tel: (403) 253-2713
A,CH,CM,E*,MS,P*
Hewlett-Packard (Canada) Ltd.
11620A-168th Street
EDMONTON, Alberta T5M 3T9
Tel: (403) 452-3670
A,CH,CM,CS,E,MS,P*

British Columbia
Hewlett-Packard (Canada) Ltd.
10691 Shellbridge Way
RICHMOND, British Columbia V6X 2W7
Tel: (604) 270-2277
Telex: 610-922-5059
A,CH,CM,CS,E*,MS,P*

Manitoba
Hewlett-Packard (Canada) Ltd.
380-550 Century Street
WINNIPEG, Manitoba R3H 0Y1
Tel: (204) 786-6701
A,CH,CM,E,MS,P*

New Brunswick
Hewlett-Packard (Canada) Ltd.
190 Wilsor Street
MONCTON, New Brunswick E2B 2V9
Tel: (506) 386-1677
Telex: 01931470
CH**

Nova Scotia
Hewlett-Packard (Canada) Ltd.
P.O. Box 931
900 Windmill Road
DARTMOUTH, Nova Scotia B2Y 3Z6
Tel: (902) 469-7820
Telex: 01931470
CH,CM,CS,E*,MS,P*

Ontario
Hewlett-Packard (Canada) Ltd.
552 Newbold Street
LONDON, Ontario N6E 2S5
Tel: (519) 686-9181
Telex: 610-352-1201
A,CH,CM,E*,MS,P*

Hewlett-Packard (Canada) Ltd
6877 Goreway Drive
MISSISSAUGA, Ontario L4V 1M8
Tel: (416) 678-9430
Telex: 610-492-4246
A,CH,CM,CS,E,MP,P
Hewlett-Packard (Canada) Ltd.
2670 Queensview Dr.
OTTAWA, Ontario K2B 8K1
Tel: (613) 820-6483
Telex: 610-563-1636
A,CH,CM,CS,E*,MS,P*

Quebec
Hewlett-Packard (Canada) Ltd.
17500 South Service Road
Trans-Canada Highway
KIRKLAND, Quebec H9J 2M5
Tel: (514) 697-4232
Telex: 05821521
A,CH,CM,CS,E,MP,P*
Hewlett-Packard (Canada) Ltd.
Les Galeries du Vallon
2323 Boulevard du Versant Nord
STE. FOY, Quebec G1N 4C2
Tel: (418) 687-4570
CH

CHILE
Jorge Calcagni y Cia. Ltda.
Arturo Burhle 065
Casilla 16475
SANTIAGO 9
Tel: 222-0222
Telex: Public Booth 0001
A,CM,E,M
Olympia (Chile) Ltd.
Rodnco de Araya 1045
Casilla 256-V
SANTIAGO 21
Tel: 225-5044
Telex: 40565 OLYMP CL
C,P

CHINA, People's Republic of
CEIEC Inc.
44 Beiwei Rd.
BEIJING, China
Telex: 22475 CEIEC CN
A,CH,CM,CS,E,P

COLOMBIA
Instrumentación
H. A. Langebaek & Kier S.A.
Apartado Aéreo 6287
BOGOTA 1, D.E.
Carrera 7 No. 48-75
BOGOTA, 2 D.E.
Tel: 287-8877
Telex: 44400
Cable: AARIS Bogota
A,CM,E,M,P

COSTA RICA
Cientifica Costarricense S.A.
Avenida 2, Calle 5
San Pedro de Montes de Oca
Apartado 10159
SAN JOSE
Tel: 24-38-20, 24-08-19
Telex: 2367 GALGUR
CM,E,M

CYPRUS
Telereva Ltd.
P.O. Box 4809
14C Stassinos Avenue
NICOSIA
Tel: 62698
Telex: 2894 Levidocy
E,M,P

CZECHOSLOVAKIA
Hewlett-Packard
Obchodní Zastupitelství v CSSR
Post schranka 27
CS-118 01 PRAHA 011
Tel: 66-296
Telex: 121353 IHC

DENMARK
Hewlett-Packard A/S
Datavej 52
DK-3460 **BIRKEROD**
Tel: (02) 81-66-40
Telex: 37409 hpas dk
A,CH,CM,CS,E,MS,P
Hewlett-Packard A/S
Navervej 1
DK-8600 **SILKEBORG**
Tel: (06) 82-71-66
Telex: 37409 hpas dk
CH,CM,E

ECUADOR
CYEDE Cia. Ltda.
Avenida Eloy Alfaro 1749
Casilla 6423 CCI
QUITO
Tel: 450-975, 243-052
Telex: 2548 CYEDE ED
A,CM,E,P
Hospitalar S.A.
Robles 625
Casilla 3590
QUITO
Tel: 545-250, 545-122
Telex: 2485 HOSPTL ED
Cable: HOSPITALAR-Quito
M

EGYPT
International Engineering Associates
24 Hussein Hegazi Street
Kasr-el-Aini
CAIRO
Tel: 23-829
Telex: 93830
CH,CS,E,M
Informatic For Systems
22 Talaat Harb Street
CAIRO
Tel: 759006
Telex: 93938 FRANK UN
CH,CS,P
Egyptian International Office
for Foreign Trade
P.O.Box 2558
CAIRO
Tel: 984935
Telex: 93337 EGPOR
P

EL SALVADOR
IPESA de El Salvador S.A.
Boulevard de los Heroes 1148
SAN SALVADOR
Tel: 252787, 259621
Telex: Public Booth 20107
A,CH,CM,CS,E,P.

FINLAND
Hewlett-Packard Oy
Revontulentie 7
SF-02100 **ESPOO** 10
Tel: (90) 455-0211
Telex: 121563 hewpa sf
A,CH,CM,CS,E,MS,P

FRANCE
Hewlett-Packard France
Le Ligoures
Bureau de Vente de Arx-en-Provence
Place Romée de Villeneuve
F-13090 **AIX-EN-PROVENCE**
Tel: (42) 59-41-02
Telex: 410770F
A,CH,CM,E,MS,P*
Hewlett-Packard France
Boite Postale No. 503
F-25026 **BESANCON**
28 Rue de la Republique
F-25000 **BESANCON**
Tel: (81) 83-16-22
CH,M
Hewlett-Packard France
Bureau de Vente de Lyon
Chemin des Mouilles
Boite Postale No. 162
F-69130 **ECULLY** Cédex
Tel: (78) 33-81-25
Telex: 310617F
A,CH,CM,CS,E,MP
Hewlett-Packard France
Immeuble France Evry
Tour Lorraine
Boulevard de France
F-91035 **EVRY** Cédex
Tel: (60) 77-96-60
Telex: 692315F
CM,E
Hewlett-Packard France
5th Avenue Raymond Chanas
F-38320 **EYBENS**
Tel: (76) 25-81-41
Telex: 980124 HP GRENOB EYBE
CH,CM
Hewlett-Packard France
Bâtiment Ampère
Rue de la Commune de Paris
Boite Postale 300
F-93153 **LE BLANC MESNIL**
Tel: (01) 865-44-52
Telex: 211032F
CH,CM,CS,E,MS
Hewlett-Packard France
Le Montesquieu
Avenue du President JF Kennedy
F-33700 **MERIGNAC**
Tel: (56) 34-00-84
Telex: 550105F
CH,CM,E,MS
Hewlett-Packard France
32 Rue Lothaire
F-57000 **METZ**
Tel: (87) 65-53-50
CH,CM
Hewlett-Packard France
3 Rue Julien Videment
F-44200 **NANTES**
Tel: (40) 48-09-44
CH**
Hewlett-Packard France
Zone Industrielle de Courtaboeuf
Avenue des Tropiques F-91947 Les Ulis Cédex **ORSAY**
Tel: (1) 907-78-25
Telex: 600048F
A,CH,CM,CS,E,MP,P
Hewlett-Packard France
Paris Porte-Maillot 13, 15 25
Boulevard De L'Amiral Bruix
F-75782 **PARIS** Cédex 16
Tel: (01) 502-12-20
Telex: 613663F
CH,CM,MS,P
Hewlett-Packard France
2 Allee de la Bourgonette
F-35100 **RENNES**
Tel: (99) 51-42-44
Telex: 740912F
CH,CM,E,MS,P*
Hewlett-Packard France
98 Avenue de Bretagne
F-76100 **ROUEN**
Tel: (35) 63-57-66 CH**,CS
Hewlett-Packard France
4 Rue Thomas Mann
Boite Postale 56
F-67200 **STRASBOURG**
Tel: (88) 28-56-46
Telex: 890141F
CH,CM,E,MS,P*
Hewlett-Packard France
20 Chemin de la Cépière
F-31081 **TOULOUSE** Cédex
Tel: (61) 40-11-12
Telex: 531639F
A,CH,CM,CS,E,P*
Hewlett-Packard France
Bureau de Vente de Lille
Immeuble Péricentre
Rue Van Gogh
F-59650 **VILLENEUVE D'ASQ**
Tel: (20) 91-41-25
Telex: 160124F
CH,CM,E,MS,P*

GERMAN FEDERAL REPUBLIC
Hewlett-Packard GmbH
Technisches Büro Berlin
Keithstrasse 2-4
D-1000 **BERLIN** 30
Tel: (030) 24-90-86
Telex: 018 3405 hpbln d
A,CH,CM,E,M,P,X
Hewlett-Packard GmbH
Technisches Büro Böblingen
Herrenberger Strasse 110
D-7030 **BOBLINGEN**
Tel: (07031) 667-1
Telex: 07265739 bbn or 07265743
A,CH,CM,CS,E,MP,P
Hewlett-Packard GmbH
Technisches Büro Dusseldorf
Emanuel-Leutze-Strasse 1
D-4000 **DUSSELDORF**
Tel: (0211) 597-1
Telex: 085/86 533 hpdd d
A,CH,CM,CS,E,MS,P
Hewlett-Packard GmbH
Vertriebszentrale Frankfurt
Berner Strasse 117
Postfach 560 140
D-6000 **FRANKFURT** 56
Tel: (0611) 50-04-1
Telex: 04 13249 hpffm d
A,CH,CM,CS,E,MP,P
Hewlett-Packard GmbH
Technisches Büro Hamburg
Kapstadtring 5
D-2000 **HAMBURG** 60
Tel: (040) 63804-1
Telex: 21 63 032 hphh d
A,CH,CM,CS,E,MS,P
Hewlett-Packard GmbH
Technisches Büro Hannover
Am Grossmarkt 6
D-3000 **HANNOVER** 91
Tel: (0511) 46-60-01
Telex: 092 3259
A,CH,CM,E,MS,P
Hewlett-Packard GmbH
Technisches Büro Mannheim
Rossiauer Weg 2-4
D-6800 **MANNHEIM**
Tel: (621) 70050
Telex: 0462105
A,C,E
Hewlett-Packard GmbH
Technisches Büro Neu Ulm
Messerschmittstrasse 7
D-7910 **NEU ULM**
Tel: 0731-70241
Telex: 712816 HP ULM-D
A,C,E*
Hewlett-Packard GmbH
Technisches Büro Nürnberg
Neumeyerstrasse 90
D-8500 **NURNBERG**
Tel: (0911) 56-30-83
Telex: 0623 860
CH,CM,E,MS,P
Hewlett-Packard GmbH
Technisches Büro München
Eschenstrasse 5
D-8021 **TAUFKIRCHEN**
Tel: (089) 6117-1
Telex: 0524985
A,CH,CM,E,MS,P

GREAT BRITAIN
Hewlett-Packard Ltd.
Trafalgar House
Navigation Road
ALTRINCHAM
Cheshire WA14 1NU
Tel: (061) 928-6422
Telex: 668068
A,CH,CS,E,M
Hewlett-Packard Ltd.
Oakfield House, Oakfield Grove
Clifton
BRISTOL BS8 2BN
Tel: 36806
Telex: 444302
CH,CM,M,P
Hewlett-Packard Ltd.
14 Wesley Street
CASTLEFORD
Yorkshire WF10 1AE
Tel: (0977) 550016
Telex: 5557355
CH
Hewlett-Packard Ltd.
Fourier House
257-263 High Street
LONDON COLNEY
Herts., AL2 1HA
Tel: (0727) 24400
Telex: 1-8952716
CH,CS,E
Hewlett-Packard Ltd
Tradax House, St. Mary's Walk
MAIDENHEAD
Berkshire, SL6 1ST
Tel: (0628) 39151
CH,CS,E,P
Hewlett-Packard Ltd.
308/314 Kings Road
READING, Berkshire
Tel: 61022
Telex: 84-80-68
CM,P
Hewlett-Packard Ltd.
Quadrangle
106-118 Station Road
REDHILL, Surrey
Tel: (0737) 68655
Telex: 947234 CH,CS,E
Hewlett-Packard Ltd.
Westminster House
190 Stratford Road
SHIRLEY, Solihull
West Midlands B90 3BJ
Tel: (021) 7458800
Telex: 339105
CH
Hewlett-Packard Ltd.
King Street Lane
WINNERSH, Wokingham
Berkshire RG11 5AR
Tel: (0734) 784774
Telex: 847178
A,CS,E,M

GREECE
Kostas Karayannis S.A.
8 Omirou Street
ATHENS 133
Tel: 32-30-303, 32-37-371
Telex: 21 59 62 RKAR GR
A,CH,CM,CS,E,M,P
PLAISIO S.A.
G. Gerardos
24 Stournara Street
ATHENS
Tel: 36-11-160
Telex: 21 9492
P

GUATEMALA
IPESA
Avenida Reforma 3-48
GUATEMALA 9
Tel: 316627, 314786
Telex: 4192 TELETRO GU
A,CH,CM,CS,E,M,P

HONG KONG
Hewlett-Packard Hong Kong, Ltd.
G.P.O. Box 795
5th Floor, Sun Hung Kai Centre
30 Harbour Road
HONG KONG
Tel: 5-8323211
Telex: 66678 HEWPA HX
Cable: HP ASIA LTD Hong Kong
E,CH,CS,P
Schmidt & Co. (Hong Kong) Ltd.
Wing On Centre, 28th Floor
Connaught Road, C.
HONG KONG
Tel: 5-455644
Telex: 74766 SCHMX HX
A,M

ICELAND
Eiding Trading Company Inc.
Hafnarnvoli-Tryggvagotu
P.O. Box 895
IS-REYKJAVIK
Tel: 1-58-20, 1-63-03
M

INDIA
Blue Star Ltd.
11 Magarath Road
BANGALORE 560 025
Tel: 55668
Telex: 0845-430
Cable: BLUESTAR
A,CH,CM,CS,E
Blue Star Ltd.
Band Box House
Prabhadevi
BOMBAY 400 025
Tel: 422-3101
Telex: 011-3751
Cable: BLUESTAR
A,M
Blue Star Ltd.
Sahas
414/2 Vir Savarkar Marg
Prabhadevi
BOMBAY 400 025
Tel: 422-6155
Telex: 011-4093
Cable: FROSTBLUE
A,CH,CM,CS,E,M
Blue Star Ltd.
Kalyan, 19 Vishwas Colony
Alkapuri, BORODA, 390 005
Tel: 65235
Cable: BLUE STAR
A
Blue Star Ltd.
7 Hare Street
CALCUTTA 700 001
Tel: 12-01-31
Telex: 021-7655
Cable: BLUESTAR
A,M
Blue Star Ltd.
133 Kodambakkam High Road
MADRAS 600 034
Tel: 82057
Telex: 041-379
Cable: BLUESTAR
A,M
Blue Star Ltd.
Bhandari House, 7th/8th Floors
91 Nehru Place
NEW DELHI 110 024
Tel: 682547
Telex: 031-2463
Cable: BLUESTAR
A,CH,CM,CS,E,M
Blue Star Ltd.
15/16 C Wellesley Rd.
PUNE 411 011
Tel: 22775
Cable: BLUE STAR
A
Blue Star Ltd.
1-1-117/1 Sarojini Devi Road
SECUNDERABAD 500 033
Tel: 70126
Telex: 0155-459
Cable: BLUEFROST
A,E
Blue Star Ltd.
T.C. 7/603 Poonnma
Maruthankuzhi
TRIVANDRUM 695 013
Tel: 65799
Telex: 0884-259
Cable: BLUESTAR
E

INDONESIA
BERCA Indonesia P.T.
P.O.Box 496/JKT
Jl. Abdul Muis 62
JAKARTA
Tel: 373009
Telex: 46748 BERSAL IA
Cable: BERSAL JAKARTA
P
BERCA Indonesia P.T.
Wisma Antara Bldg., 17th floor
JAKARTA
A,CS,E,M
BERCA Indonesia P.T.
P.O. Box 174/SBY.
Jl. Kulet No. 11
SURABAYA
Tel: 68172
Telex: 31146 BERSAL SB
Cable: BERSAL-SURABAYA
A,E,M,P*

SALES & SUPPORT OFFICES
Arranged alphabetically by country

IRAQ
Hewlett-Packard Trading S.A.
Mansoor City 9B/3/7
BAGHDAD
Tel: 551-49-73
Telex: 2455 HEPAIRAQ IK
CH,CS

IRELAND
Hewlett-Packard Ireland Ltd.
Kestrel House
Clanwilliam Court
Lower Mount Street
DUBLIN 2, Eire
Tel: 680424, 680426
Telex: 30439
A,CH,CM,CS,E,M,P
Cardiac Services Ltd.
Kilmore Road
Artane
DUBLIN 5, Eire
Tel: (01) 351820
Telex: 30439
M

ISRAEL
Electronics Engineering Division
Motorola Israel Ltd.
16 Kremenetski Street
P.O. Box 25016
TEL-AVIV 67899
Tel: 3-338973
Telex: 33569 Moti IL
Cable: BASTEL Tel-Aviv
A,CH,CM,CS,E,M,P.

ITALY
Hewlett-Packard Italiana S.p.A.
Traversa 99C
Giulio Petrone, 19
I-70124 **BARI**
Tel: (080) 41-07-44
M
Hewlett-Packard Italiana S.p.A.
Via Martin Luther King, 38/111
I-40132 **BOLOGNA**
Tel: (051) 402394
Telex: 511630
CH,CM,E,MS
Hewlett-Packard Italiana S.p.A.
Via Principe Nicola 43G/C
I-95126 **CATANIA**
Tel: (095) 37-10-87
Telex: 970291 C,P
Hewlett-Packard Italiana S.p.A
Via G. Di Vittorio 9
I-20063 **CERNUSCO SUL NAVLIGLIO**
Tel: (2) 903691
Telex: 334632
A,CH,CM,CS,E,MP,P
Hewlett-Packard Italiana S.p.A
Via Nuova san Rocco A
Capodmonte, 62/A
I-80131 **NAPOLI**
Tel: (081) 7413544
A,CH,CM,E
Hewlett-Packard Italiana S.p.A
Viale G. Modugno 33
I-16156 **GENOVA PEGLI**
Tel: (010) 68-37-07 E,C
Hewlett-Packard Italiana S.p.A
Via Turazza 14
I-35100 **PADOVA**
Tel: (49) 664888
Telex: 430315
A,CH,CM,E,MS
Hewlett-Packard Italiana S.p.A.
Viale C. Pavese 340
I-00144 **ROMA**
Tel: (06) 54831
Telex: 610514
A,CH,CM,CS,E,MS,P*

Hewlett-Packard Italiana S.p.A.
Corso Giovanni Lanza 94
I-10133 **TORINO**
Tel: (011) 682245, 659308
Telex: 221079
CH,CM,E

JAPAN
Yokogawa-Hewlett-Packard Ltd.
Inoue Building
1-1348-3, Asahi-cho
ATSUGI, Kanagawa 243
Tel: (0462) 24-0451
CM,C*,E
Yokogawa-Hewlett-Packard Ltd.
Sannomiya-Daiichi Seimei-Bldg. 5F
69 Kyo-machi Chuo-ku
KOBE 650
Tel: (078) 392-4791
C,E
Yokogawa-Hewlett-Packard Ltd.
Mito Mitsui Building
1-4-73, San-no-maru
MITO, Ibaragi 310
Tel: (0292) 25-7470
CH,CM,E
Yokogawa-Hewlett-Packard Ltd.
Sumitomo Seimei Nagoya Bldg.
11-2 Shimo-sasajima-cho
Nakamura-ku
NAGOYA, Aichi 450
Tel: (052) 571-5171
CH,CM,CS,E,MS
Yokogawa-Hewlett-Packard Ltd
Chuo Bldg., 4th Floor
5-4-20 Nishinakajima, 5-chome
Yodogawa-ku
OSAKA, 532
Tel: (06) 304-6021
Telex: YHPOSA 523-3624
A,CH,CM,CS,E,MP,P*
Yokogawa-Hewlett-Packard Ltd
3-29-21 Takaido-Higashi 3-chome
Suginami-ku
TOKYO 168
Tel: (03) 331-6111
Telex: 232-2024 YHPTOK
A,CH,CM,CS,E,MP,P*
Yokogawa-Hewlett-Packard Ltd
3-30-4 Tsuruya-cho
Kanagawa-ku,
YOKOHAMA Kanagawa, 221
Tel: (045) 312-1252
CH,CM,E

JORDAN
Mousher Cousins Company
P.O. Box 1387
AMMAN
Tel: 24907, 39907
Telex: 21456 SABCO JO
CH,E,M,P

KENYA
ADCOM Ltd., Inc.
City House, Wabera Street
P.O Box 30635
NAIROBI
Tel: 331955
Telex: 22639
E,M

KOREA
Samsung Electronics
Industrial Products Div.
76-561 Yeok-sam-Dong
Kangnam-Ku
C.P.O. Box 2775
SEOUL
Tel: 555-7555, 555-5447
Telex: K27364 SAMSAN
A,CH,CM,CS,E,M,P

KUWAIT
Al-Khaldya Trading & Contracting
P.O. Box 830 Safat
KUWAIT
Tel: 42-4910, 41-1726
Telex: 2481 Areeg kt
CH,E,M
Photo & Cine Equipment
P.O. Box 270 Safat
KUWAIT
Tel: 42-2846, 42-3801
Telex: 2247 Matin
P

LEBANON
G.M. Dolmadjian
Achrafieh
P.O. Box 165 167
BEIRUT
Tel. 290293
MP

LUXEMBOURG
Hewlett-Packard Belgium S.A./N.V.
Blvd de la Woluwe, 100
Woluwedal
B-1200 *BRUSSELS*
Tel: (02) 762-32-00
Telex: 23 494 paloben bru
A,CH,CM,CS,E,MP,P

MALAYSIA
Hewlett-Packard Sales (Malaysia) Sdn. Bhd
Suite 2.21/2.22
Bangunan Angkasa Raya
Jalan Ampang
KUALA LUMPUR
Tel: 483544
Telex: MA31011
A,CH,E,M,P*
Protel Engineering
Lot 319, Salok Road
P.O Box 1917
Kuching, SARAWAK
Tel: 53544
Telex: MA 70904 PROMAL
Cable: PROTELENG
A,E,M

MALTA
Philip Toledo Ltd
Notabile Rd
MRIEHEL
Tel: 447 47, 455 66
Telex: MW 649
P

MEXICO
Hewlett-Packard Mexicana, S.A. de C.V.
Avenida Periferico Sur No. 6501
Tepepan, Xochimilco
MEXICO CITY 23, D.F.
Tel: (905) 676-4600
Telex: 017-74-507
A,CH,CS,E,MS,P
Hewlett-Packard Mexicana, S.A. de C.V.
Rio Volga 600
Colonia del Valle
MONTERREY, N.L.
Tel: 78-42-93, 78-42-40, 78-42-41
Telex: 038-410
CH

MOROCCO
Dolbeau
81 rue Karatchi
CASABLANCA
Tel: 3041-82, 3068-38
Telex: 23051, 22822
E
Gerep
2 rue d'Agadir
Boite Postale 156
CASABLANCA
Tel: 272093, 272095
Telex: 23 739
P

NETHERLANDS
Hewlett-Packard Nederland B.V.
Van Heuven Goedhartlaan 121
NL-1181KK **AMSTELVEEN**
P.O. Box 667
NL-1080 AR **AMSTELVEEN**
Tel: (20) 47-20-21
Telex: 13 216
A,CH,CM,CS,E,MP,P
Hewlett-Packard Nederland B.V.
Bongerd 2
NL-2906VK **CAPPELLE**, A/D Ijssel
P.O. Box 41
NL-2900 AA **CAPELLE**, Ijssel
Tel: (10) 51-64-44
Telex: 21261 HEPAC NL
A,CH,CM,CS
Koning en Hartman Electrotechniek B.V.
Koperwert 30
2544 En den Haag
The **NETHERLANDS**
Tel: 070-210101
Telex: 31528
CM

NEW ZEALAND
Hewlett-Packard (N.Z.) Ltd
169 Manukau Road
P.O. Box 26-189
Epsom, **AUCKLAND**
Tel: 687-159
Cable: HEWPACK Auckland
CH,CM,E,P*
Hewlett-Packard (N.Z.) Ltd
4-12 Cruickshank Street
Kilbirnie, **WELLINGTON** 3
P.O. Box 9443
Courtenay Place, WELLINGTON
Tel: 877-199
Cable: HEWPACK Wellington
CH,CM,E,P
Northrop Instruments & Systems Ltd.
369 Khyber Pass Road
P.O. Box 8602
AUCKLAND
Tel: 794-091
Telex: 60605
A,M

Northrop Instruments & Systems Ltd.
110 Mandeville St.
P.O. Box 8388
CHRISTCHURCH
Tel: 486-928
Telex: 4203
A,M
Northrop Instruments & Systems Ltd.
Sturdee House
85-87 Ghuznee Street
P.O. Box 2406
WELLINGTON
Tel: 850-091
Telex: NZ 3380
A,M

NORTHERN IRELAND
Cardiac Services Company
95A Finaghy Road South
BELFAST BT 10 0BY
Tel: (0232) 625-566
Telex: 747626
M

NORWAY
Hewlett-Packard Norge A/S
Folke Bernadottesvei 50
P.O. Box 3558
N-5033 **FYLLINGSDALEN** (BERGEN)
Tel: (05) 16-55-40
Telex: 16621 hpnas n
CH,CM,E
Hewlett-Packard Norge A/S
Oesterndalen 18
P.O. Box 34
N-1345 **OESTERAAS**
Tel: (02) 17-11-80
Telex: 16621 hpnas n
A*,CH,CM,E,MS,P

OMAN
Khimji Ramdas
P.O. Box 19
MUSCAT
Tel: 72-22-17, 72-22-25
Telex: 3289 BROKER MB MUSCAT
P

PAKISTAN
Mushko & Company Ltd
10, Bazar Road
Sector G-6/4
ISLAMABAD
Tel: 26875
Cable: FEMUS Rawalpindi
A,E,M
Mushko & Company Ltd
Dosmal Chambers
Abdullah Haroon Road
KARACHI-0302
Tel: 511027, 512927
Telex: 2894 MUSKO PK
Cable: COOPERATOR Karachi
*A,E,M,P.**

PANAMA
Electrónico Balboa, S.A.
Calle Samuel Lewis
Apartado 4929
Panama 5
Edificio "Alfa" No. 2
CIUDAD DE PANAMA
Tel: 64-2700
Telex: 0383 ELECTRON PG
A,CM,E,M,P

PANAMA (Con't.)
Foto Internacional S.A.
Free Zone Coco
Apartado 2068
COLON 3
Tel: 45-2333
Telex: 379-8626 386-8722
P

PERU
Cia Electro Médica S.A.
Los Flamencos 145 San Isidro
Casilla 1030
LIMA
Tel: 41-4325 41-3703
Telex: Rpc Booth 25306
A.CM.E.M.P

PHILIPPINES
The Online Advanced Systems Corporation
Rico House, Amorsolo Cor. Herrera Street
Legaspi Village Makati
P.O. Box 1510
Metro MANILA
Tel: 85-35-81, 85-34-91, 85-32-21
Telex: 3274 ONLINE
A.CH.CS.E.M

Electronic Specialists and Proponents Inc.
690-B Epifanio de los Santos Avenue
Cubao, QUEZON CITY
P.O. Box 2649 Manila
Tel: 98-96-81, 98-96-82, 98-96-83
Telex: 40018, 62000 ITT GLOBE MACKAY BOOTH
P

POLAND
Biuro Informatyki Technicznej Hewlett-Packard
Ul. Stawki 2, 6P
PL-00-950 WARSZAWA
Tel: 39-59-62, 39-67-43
Telex: 812453 hepa pl

PORTUGAL
SOGUIMICA
Av. da Liberdade 220-2
P-1298 LISBOA Codex
Tel: 56 21 81, 56 21 82
Telex: 13316

Telectra-Empresa Técnica de Equipamentos Eléctricos S.a.r.l.
Rua Rodrigo da Fonseca 103
P.O. Box 2531
P-LISBON 1
Tel: (19) 68-60-72
Telex: 12598
CH,CS,E,P

Mundinter
Intercambio Mundial de Comércio S.a.r.l.
P.O. Box 2761
Avenida Antonio Augusto de Aguiar 138
P-LISBON
Tel: (19) 53-21-31, 53-21-37
Telex: 16691 munter p
M

PUERTO RICO
Hewlett-Packard Puerto Rico
P.O. Box 4407
CAROLINA, Puerto Rico 00630
Calle 272 Edificio 203
Urb. Country Club
RIO PIEDRAS, Puerto Rico 00924
Tel: (809) 762-7255
Telex: 345 0514
A,CH,CS

QATAR
Nasser Trading & Contracting
P.O. Box 1563
DOHA
Tel: 22170
Telex: 4439 NASSER
M

Computerabia
P.O. Box 2570
DOHA
Tel: 329515
Telex: 4806 CHPARB
P

ROMANIA
Hewlett-Packard Reprezentanta
Boulevard Nicolae Balcescu 16
BUCURESTI
Tel: 130725
Telex: 10440

SAUDI ARABIA
Modern Electronic Establishment
P.O. Box 193
AL-KHOBAR
Tel: 44-678, 44-813
Telex: 670136
Cable: ELECTA AL-KHOBAR
CH,CS,E,M,P

Modern Electronic Establishment
P.O. Box 1228, Baghdadiah Street
JEDDAH
Tel: 27-798
Telex: 401035
Cable: ELECTA JEDDAH
CH,CS,E,M,P

Modern Electronic Establishment
P.O. Box 2728
RIYADH
Tel: 62-596, 66-232
Telex: 202049
CH,CS,E,M,P

SCOTLAND
Hewlett-Packard Ltd.
Royal Bank Buildings
Swan Street
BRECHIN, Angus, Scotland
Tel: 3101, 3102
CH,CM

Hewlett-Packard Ltd.
SOUTH QUEENSFERRY
West Lothian, EH30 9GT
GB-Scotland
Tel: (031) 3311000
Telex: 72682
A,CH,CM,CS,E,M

SINGAPORE
Hewlett-Packard Singapore (Pty.) Ltd.
P.O. Box 58 Alexandra Post Office
SINGAPORE, 9115
6th Floor, Inchcape House
450-452 Alexandra Road
SINGAPORE 0511
Tel: 631788
Telex: HPSGSO RS 34209
Cable: HEWPACK, Singapore
A,CH,CS,E,MS,P

SOUTH AFRICA
Hewlett-Packard South Africa (Pty.) Ltd.
P.O. Box 120
Howard Place
Pine Park Center, Forest Drive,
Pinelands
CAPE PROVINCE 7450
Tel: 53-7955, 53-7956, 53-7957
Telex: 57-0006
A,CH,CM,E,MS,P

Hewlett-Packard South Africa (Pty.) Ltd.
P.O. Box 37099
Overport
DURBAN 4067
Tel: 28-4178, 28-4179, 28-4110
CH,CM

Hewlett-Packard South Africa (Pty.) Ltd.
P.O. Box 33345
Glenstantia 0010 **TRANSVAAL**
1st Floor East
Constantia Park Ridge Shopping Centre
Constantia Park
PRETORIA
Tel.: 01298-1126
Telex.: 32163
CH,E

Hewlett-Packard South Africa (Pty.) Ltd.
Private Bag Wendywood
SANDTON 2144
Tel: 802-5111, 802-5125
Telex: 89-84782
Cable: HEWPACK Johannesburg
A,CH,CM,CS,E,MS,P

SPAIN
Hewlett-Packard Española S.A.
c/Entenza, 321
E-**BARCELONA** 29
Tel: (3) 322-24-51, 321-73-54
Telex: 52603 hpbee
A,CH,CM,CS,E,MS,P

Hewlett-Packard Española S.A.
c/San Vicente S/N
Edificio Alba II, 7 B
E-**BILBAO** 1
Tel: (944) 423-8306, 423-8206
A,CH,CM,E,MS

Hewlett-Packard Española S.A.
Calle Jerez 3
E-**MADRID** 16
Tel: 458-2600
Telex: 23515 hpe
A,CM,E

Hewlett-Packard Española S.A.
c/o Costa Brava 13
Colonia Mirasserra
E-**MADRID** 34
Tel: 734-8061, 734-1162
CH,CS,M

Hewlett-Packard Española S.A.
Av. Ramón y Cajal 1-9
Edificio Sevilla 1,
E-**SEVILLA** 5
Tel: 64-44-54, 64-44-58
Telex: 72933
A,CH,CS,MS,P

Hewlett-Packard Española S.A.
C/Ramon Gordillo, 1 (Entlo.3)
E-**VALENCIA** 10
Tel: 361-1354, 361-1358
CH,CM,P

SWEDEN
Hewlett-Packard Sverige AB
Enghetsvägen 3, Fack
P.O. Box 20502
S-16120 **BROMMA**
Tel: (08) 730-0550
Telex: (854) 10721 **MESSAGES**
Cable: **MEASUREMENTS**
STOCKHOLM
A,CH,CM,CS,E,MS,P

Hewlett-Packard Sverige AB
Sunnanvägen 14K
S-22226 **LUND**
Tel: (46) 13-69-79
Telex: (854) 10721 (via BROMMA office)
CH,CM

Hewlett-Packard Sverige AB
Vastra Vintergatan 9
S-70344 **OREBRO**
Tel: (19) 10-48-80
Telex: (854) 10721 (via BROMMA office)
CH,CM

Hewlett-Packard Sverige AB
Friballsgatan 30
S-42132 **VASTRA-FROLUNDA**
Tel: (031) 49-09-50
Telex: (854) 10721 (via BROMMA office)
CH,CM,E,P

SWITZERLAND
Hewlett-Packard (Schweiz) AG
Clarastrasse 12
CH-4058 **BASLE**
Tel: (61) 33-59-20
A,CM

Hewlett-Packard (Schweiz) AG
Bahnhoherweg 44
3018 **BERN**
Tel: (031) 56-24-22
CH,CM

Hewlett-Packard (Schweiz) AG
47 Avenue Blanc
CH-1202 **GENEVA**
Tel: (022) 32-30-05, 32-48-00
CH,CM,CS

Hewlett-Packard (Schweiz) AG
29 Chemin Château Bloc
CH-1219 **LE LIGNON-Geneva**
Tel: (022) 96-03-22
Telex: 27333 hpag ch
Cable: HEWPACKAG Geneva
A,CM,E,MS,P

Hewlett-Packard (Schweiz) AG
Zürcherstrasse 20
Allmend 2
CH-8967 **WIDEN**
Tel: (57) 50-111
Telex: 59933 hpag ch
Cable: HPAG CH
A,CH,CM,CS,E,MS,P

SYRIA
General Electronic Inc.
Nuri Basha-Ahnat Ebn Kays Street
P.O. Box 5781
DAMASCUS
Tel: 33-24-87
Telex: 11215 ITIKAL
Cable: ELECTROBOR DAMASCUS
E

Middle East Electronics
Place Azmé
Boite Postale 2308
DAMASCUS
Tel: 334592
Telex: 11304 SATACO SY
M,P

TAIWAN
Hewlett-Packard Far East Ltd.
Kaohsiung Office
2/F 68-2, Chung Cheng 3rd Road
KAOHSIUNG
Tel: 241-2318, 261-3253
E,MS,P

Hewlett-Packard Far East Ltd
Taichung Office
#33, Cheng Tr Rd
10th Floor, Room 5
TAICHUNG
Tel: (042) 289274

Hewlett-Packard Far East Ltd.
Taiwan Office
5th Floor
205 Tun Hwa North Road
TAIPEI
Tel:(02) 751-0404
Cable: HEWPACK Taipei
A,CH,CS,E,MS,P

Ing Lih Trading Co.
3rd Floor 18, Po-Ai Road
TAIPEI (100)
Tel: (02) 311-1914
Cable: INGLIH TAIPEI
A

THAILAND
Unimesa
30 Patpong Ave., Suriwong
BANGKOK 5
Tel: (234-091) (234-092)
Telex: TH 81160, TH 81038
Cable: UNIMESA Bangkok
A,C,E,M

Bangkok Business Equipment Ltd.
5/5-6 Dejo Road
BANGKOK
Tel: 234-8670, 234-8671
Telex: 87669-BEQUIPT TH
Cable: BUSIQUIPT Bangkok
P

TRINIDAD & TOBAGO
Caribbean Telecoms Ltd.
50/A Jerningham Avenue
P.O. Box 732
PORT-OF-SPAIN
Tel: 624-4213, 624-4214
Telex: 3235, 3272 HUGCO WG
A,CM,E,M,P

TUNISIA
Tunisie Electronique
31 Avenue de la Liberte
TUNIS
Tel: 280-144
E,P

Corema
1 ter. Av. de Carthage
TUNIS
Tel: 253-821
Telex: 12319 CABAM TN
M

TURKEY
Teknim Company Ltd.
Iran Caddesi No. 7
Kavaklidere, ANKARA
Tel: 275800
Telex: 42155
E

E.M.A.
Medina Eldem Sokak No.41/6
Yuksel Caddesi
ANKARA
Tel: 175 622
M,P

UNITED ARAB EMIRATES
Emtac Ltd.
P.O. Box 1641
SHARJAH
Tel: 354121, 354123
Telex: 68136 Emtac SL
CH,CS,E,M,P

UNITED KINGDOM
see: GREAT BRITAIN
NORTHERN IRELAND
SCOTLAND

UNITED STATES

Alabama
Hewlett-Packard Co.
700 Century Park South
Suite 128
BIRMINGHAM, AL 35226
Tel: (205) 822-6802
CH,CM,MP

Hewlett-Packard Co.
P.O. Box 4207
8290 Whitesburg Drive, S.E.
HUNTSVILLE, AL 35802
Tel: (205) 881-4591
CH,CM,CS,E,M*

Alaska
Hewlett-Packard Co.
1577 "C" Street, Suite 252
ANCHORAGE, AK 99510
Tel: (206) 454-3971
CH*,CM

Arizona
Hewlett-Packard Co.
2336 East Magnolia Street
PHOENIX, AZ 85034
Tel: (602) 273-8000
A,CH,CM,CS,E,MS

Hewlett-Packard Co.
2424 East Aragon Road
TUCSON, AZ 85702
Tel: (602) 889-4631
CH,CM,E,MS**

Arkansas
Hewlett-Packard Co.
P.O. Box 5646
Brady Station
LITTLE ROCK, AR 72215
Tel: (501) 376-1844, (501) 664-8773
CM,MS

California
Hewlett-Packard Co.
99 South Hill Dr.
BRISBANE, CA 94005
Tel: (415) 330-2500
CH,CM,CS

Hewlett-Packard Co.
7621 Canoga Avenue
CANOGA PARK, CA 91304
Tel: (213) 702-8300
A,CH,CM,CS,E,P

Hewlett-Packard Co.
1579 W. Shaw Avenue
FRESNO, CA 93771
Tel: (209) 224-0582
CM,MS

Hewlett-Packard Co.
1430 East Orangethorpe
FULLERTON, CA 92631
Tel: (714) 870-1000
CH,CM,CS,E,MP

Hewlett-Packard Co.
5400 W. Rosecrans Boulevard
LAWNDALE, CA 90260
P.O. Box 92105
LOS ANGELES, CA 90009
Tel: (213) 970-7500
CH,CM,CS,MP

Hewlett-Packard Co.
3939 Lankershim Blvd.
NORTH HOLLYWOOD, CA 91604
Tel: (213) 877-1282
Regional Headquarters

Hewlett-Packard Co.
3200 Hillview Avenue
PALO ALTO, CA 94304
Tel: (415) 857-8000
CH,CM,CS,E

Hewlett-Packard Co.
646 W. North Market Boulevard
SACRAMENTO, CA 95834
Tel: (916) 929-7222
A*,CH,CM,CS,E,MS

Hewlett-Packard Co.
9606 Aero Drive
P.O. Box 23333 **SAN DIEGO**, CA 92123
Tel: (714) 279-3200
CH,CM,CS,E,MP

Hewlett-Packard Co.
Suite A
5553 Hollister
SANTA BARBARA, CA 93111
Tel: (805) 964-3390

Hewlett-Packard Co.
3003 Scott Boulevard
SANTA CLARA, CA 95050
Tel: (408) 988-7000
A,CH,CM,CS,E,MP

Colorado
Hewlett-Packard Co.
24 Inverness Place, East
ENGLEWOOD, CO 80112
Tel: (303) 771-3455
A,CH,CM,CS,E,MS

Connecticut
Hewlett-Packard Co.
47 Barnes Industrial Road South
P.O. Box 5007
WALLINGFORD, CT 06492
Tel: (203) 265-7801
A,CH,CM,CS,E,MS

Florida
Hewlett-Packard Co.
P.O. Box 24210
2727 N.W. 62nd Street
FORT LAUDERDALE, FL 33309
Tel: (305) 973-2600
CH,CM,CS,E,MP

Hewlett-Packard Co.
4080 Woodcock Drive, #132
Brownett Building
JACKSONVILLE, FL 32207
Tel: (904) 398-0663
CM,C*,E*,MS**

Hewlett-Packard Co.
P.O. Box 13910
6177 Lake Ellenor Drive
ORLANDO, FL 32809
Tel: (305) 859-2900
A,CH,CM,CS,E,MS

Hewlett-Packard Co.
6425 N. Pensacola Blvd.
Suite 1, Building 1
PENSACOLA, FL 32575
Tel: (904) 476-8422
A,CM,MS

Hewlett-Packard Co.
110 South Hoover, Suite 120
Vanguard Bldg.
TAMPA, FL 33609
Tel: (813) 872-0900
A*,CH,CM,CS,E*,M*

Georgia
Hewlett-Packard Co.
P.O. Box 105005
2000 South Park Place
ATLANTA, GA 30339
Tel: (404) 955-1500
Telex: 810-766-4890
A,CH,CM,CS,E,MP

Hewlett-Packard Co.
Executive Park Suite 306
P.O. Box 816
AUGUSTA, GA 30907
Tel: (404) 736-0592
CM,MS

Hewlett-Packard Co.
P.O. Box 2103
1172 N. Davis Drive
WARNER ROBINS, GA 31098
Tel: (912) 923-8831
CM,E

Hawaii
Hewlett-Packard Co.
Kawaiahao Plaza, Suite 190
567 South King Street
HONOLULU, HI 96813
Tel: (808) 526-1555
A,CH,CM,E,MS

Idaho
Hewlett-Packard Co.
1111 Chinden Boulevard
BOISE, ID 83707
Tel: (208) 376-6000
CH,CM,M*

Illinois
Hewlett-Packard Co.
211 Prospect Road
BLOOMINGTON, IL 61701
Tel: (309) 663-0383
CH,CM,MS**

Hewlett-Packard Co.
1100 31st Street
DOWNERS GROVE, IL 60515
Tel: (312) 960-5760
CH,CM,CS

Hewlett-Packard Co.
5201 Tollview Drive
ROLLING MEADOWS, IL 60008
Tel: (312) 255-9800
A,CH,CM,CS,E,MP

Indiana
Hewlett-Packard Co.
P.O. Box 50807
7301 No. Shadeland Avenue
INDIANAPOLIS, IN 46250
Tel: (317) 842-1000
A,CH,CM,CS,E,MS

Iowa
Hewlett-Packard Co.
5815 S.W. 5th Street
DES MOINES, IA 50315
Tel: (515) 243-5876
CH,CM,MS**

Hewlett-Packard Co.
2415 Heinz Road
IOWA CITY, IA 52240
Tel: (319) 351-1020
CH,CM,E*,MS

Kansas
Hewlett-Packard Co.
1644 S. Rock
WICHITA, KA 67207
Tel: (316) 265-5200
CH,CM

Kentucky
Hewlett-Packard Co.
10170 Linn Station Road
Suite 525
LOUISVILLE, KY 40223
Tel: (502) 426-0100
A,CH,CM,CS,MS

Louisiana
Hewlett-Packard Co
P.O. Box 1449
3229 Williams Boulevard
KENNER, LA 70062
Tel: (504) 443-6201
A,CH,CM,CS,E,MS

Maryland
Hewlett-Packard Co.
7121 Standard Drive
HANOVER, MD 21076
Tel: (301) 796-7700
A,CH,CM,CS,E,MS

Hewlett-Packard Co.
2 Choke Cherry Road
ROCKVILLE, MD 20850
Tel: (301) 948-6370
Telex: 710-828-9685
A,CH,CM,CS,E,MP

Massachusetts
Hewlett-Packard Co.
32 Hartwell Avenue
LEXINGTON, MA 02173
Tel: (617) 861-8960
A,CH,CM,CS,E,MP

Michigan
Hewlett-Packard Co.
23855 Research Drive
FARMINGTON HILLS, MI 48024
Tel: (313) 476-6400
A,CH,CM,CS,E,MP

Hewlett-Packard Co.
4326 Cascade Road S.E.
GRAND RAPIDS, MI 49506
Tel: (616) 957-1970
CH,CM,CS,MS

Minnesota
Hewlett-Packard Co.
2025 W. Larpenteur Ave.
ST. PAUL, MN 55113
Tel: (612) 644-1100
A,CH,CM,CS,E,MP

Mississippi
Hewlett-Packard Co.
P.O. Box 5028
322 N. Mart Plaza
JACKSON, MS 39216
Tel: (601) 982-9363
CM,MS

Missouri
Hewlett-Packard Co.
11131 Colorado Avenue
KANSAS CITY, MO 64137
Tel: (816) 763-8000
Telex: 910-771-2087
A,CH,CM,CS,E,MS

Hewlett-Packard Co.
1024 Executive Parkway
ST. LOUIS, MO 63141
Tel: (314) 878-0200
A,CH,CM,CS,E,MP

Nebraska
Hewlett-Packard
7101 Mercy Road
Suite 101, IBX Building
OMAHA, NE 68106
Tel: (402) 392-0948
CM,MS

Nevada
Hewlett-Packard Co
Suite D-130
5030 Paradise Blvd.
LAS VEGAS, NV 89119
Tel: (702) 736-6610
CM,MS**

New Jersey
Hewlett-Packard Co.
Crystal Brook Professional Building
Route 35
EATONTOWN, NJ 07724
Tel: (201) 542-1384
A*,CM,C*,E*,P*

Hewlett-Packard Co.
W 120 Century Road
PARAMUS, NJ 07652
Tel: (201) 265-5000
A,CH,CM,CS,E,MP

Hewlett-Packard Co.
60 New England Av. West
PISCATAWAY, NJ 08854
Tel: (201) 981-1199
A,CH,CM,CS,E

New Mexico
Hewlett-Packard Co.
P.O. Box 11634
11300 Lomas Blvd.,N.E.
ALBUQUERQUE, NM 87123
Tel: (505) 292-1330
Telex: 910-989-1185
CH,CM,CS,E,MS

New York
Hewlett-Packard Co
5 Computer Drive South
ALBANY, NY 12205
Tel: (518) 458-1550
Telex: 710-444-4691
A,CH,CM,E,MS

Hewlett-Packard Co.
9600 Main Street
CLARENCE, NY 14031
Tel: (716) 759-8621
Telex: 710-523-1893
CH

Hewlett-Packard Co.
200 Cross Keys Office
FAIRPORT, NY 14450
Tel: (716) 223-9950
Telex: 510-253-0092
CH,CM,CS,E,MS

Hewlett-Packard Co.
No. 1 Pennsylvania Plaza
55th Floor
34th Street & 8th Avenue
NEW YORK, NY 10119
Tel: (212) 971-0800
CH,CM,CS,E*,M*

Hewlett-Packard Co.
5858 East Molloy Road
SYRACUSE NY 13211
Tel: (315) 455-2486
A,CH,CM,E,MS

Hewlett-Packard Co.
3 Crossways Park West
WOODBURY, NY 11797
Tel: (516) 921-0300
Telex: 510-221-2183
A,CH,CM,CS,E,MS

North Carolina
Hewlett-Packard Co.
P.O. Box 15579
2905 Guess Road (27705)
DURHAM, NC 27704
Tel: (919) 471-8466
C,M

Hewlett-Packard Co.
5605 Roanne Way
GREENSBORO, NC 27409
Tel: (919) 852-1800
A,CH,CM,CS,E,MS

Ohio
Hewlett-Packard Co
9920 Carver Road
CINCINNATI, OH 45242
Tel: (513) 891-9870
CH,CM,CS,MS

Hewlett-Packard Co.
16500 Sprague Road
CLEVELAND, OH 44130
Tel: (216) 243-7300
Telex: 810-423-9430
A,CH,CM,CS,E,MS

Hewlett-Packard Co.
962 Crupper Ave
COLUMBUS, OH 43229
Tel: (614) 436-1041
CH,CM,CS,E*

SALES & SUPPORT OFFICES
Arranged alphabetically by country

Ohio (Con't)
Hewlett-Packard Co.
330 Progress Rd.
DAYTON, OH 45449
Tel: (513) 859-8202
A,CH,CM,E*,MS

Oklahoma
Hewlett-Packard Co.
P.O. Box 366
1503 W. Gore Blvd., Suite #2
LAWTON, OK 73502
Tel: (405) 248-4248
C

Hewlett-Packard Co.
P.O. Box 32008
304 N. Meridan Avenue, Suite A
OKLAHOMA CITY, OK 73107
Tel: (405) 946-9499
A*,CH,CM,E*,MS

Hewlett-Packard Co.
Suite 121
9920 E. 42nd Street
TULSA, OK 74145
Tel: (918) 665-3300
A**,CH,CM,CS,M*

Oregon
Hewlett-Packard Co.
1500 Valley River Drive, Suite 330
EUGENE, OR 97401
Tel: (503) 683-8075
C

Hewlett-Packard Co.
9255 S. W. Pioneer Court
WILSONVILLE, OR 97070
Tel: (503) 682-8000
A,CH,CM,CS,E*,MS

Pennsylvania
Hewlett-Packard Co.
1021 8th Avenue
King of Prussia Industrial Park
KING OF PRUSSIA, PA 19406
Tel: (215) 265-7000
Telex: 510-660-2670
A,CH,CM,CS,E,MP

Hewlett-Packard Co.
111 Zeta Drive
PITTSBURGH, PA 15238
Tel: (412) 782-0400
A,CH,CM,CS,E,MP

South Carolina
Hewlett-Packard Co.
P.O. Box 6442
6941-0 N. Trenholm Road
COLUMBIA, SC 29260
Tel: (803) 782-6493
CH,CM,E,MS

Hewlett-Packard Co.
814 Wade Hampton Blvd.
Suite 10
GREENVILLE, SC 29609
Tel: (803) 232-0917
C

Tennessee
Hewlett-Packard Co.
P.O. Box 22490
224 Peters Road
Suite 102
KNOXVILLE, TN 37922
Tel: (615) 691-2371
A*,CH,CM,MS

Hewlett-Packard Co.
3070 Directors Row
MEMPHIS, TN 38131
Tel: (901) 346-8370
A,CH,CM,MS

Hewlett-Packard Co.
Suite 103
478 Craighead Street
NASHVILLE, TN 37204
Tel: (615) 383-9136
CM,MS**

Texas
Hewlett-Packard Co.
Suite 310W
7800 Shoalcreek Blvd
AUSTIN, TX 78757
Tel: (512) 459-3143
CM,E

Hewlett-Packard Co.
Suite C-110
4171 North Mesa
EL PASO, TX 79902
Tel: (915) 533-3555
CH,CM,E*,MS**

Hewlett-Packard Co.
5020 Mark IV Parkway
FORT WORTH, TX 76106
Tel: (817) 625-6361
CM,C*

Hewlett-Packard Co
P.O. Box 42816
10535 Harwin Street
HOUSTON, TX 77036
Tel: (713) 776-6400
A,CH,CM,CS,E,MP

Hewlett-Packard Co.
3309 67th Street
Suite 24
LUBBOCK, TX 79413
Tel: (806) 799-4472
M

Hewlett-Packard Co.
P.O. Box 1270
930 E. Campbell Rd.
RICHARDSON, TX 75081
Tel: (214) 231-6101
A,CH,CM,CS,E,MP

Hewlett-Packard Co.
205 Billy Mitchell Road
SAN ANTONIO, TX 78226
Tel: (512) 434-8241
CH,CM,CS,E,MS

Utah
Hewlett-Packard Co.
3530 W. 2100 South Street
SALT LAKE CITY, UT 84119
Tel: (801) 974-1700
A,CH,CM,CS,E,MS

Virginia
Hewlett-Packard Co
P.O. Box 9669
2914 Hungary Spring Road
RICHMOND, VA 23228
Tel: (804) 285-3431
A,CH,CM,CS,E,MS

Hewlett-Packard Co
P.O. Box 4786
3110 Peters Creek Road, N.W.
ROANOKE, VA 24015
Tel: (703) 563-2205
CH,CM,E**

Hewlett-Packard Co
P.O. Box 12778
5700 Thurston Avenue
Suite 111
VIRGINIA BEACH, VA 23455
Tel: (804) 460-2471
CH,CM,MS

Washington
Hewlett-Packard Co.
15815 S.E. 37th Street
BELLEVUE, WA 98006
Tel: (206) 643-4000
A,CH,CM,CS,E,MP

Hewlett-Packard Co
Suite A
708 North Argonne Road
SPOKANE, WA 99206
Tel: (509) 922-7000
CH,CM,CS

West Virginia
Hewlett-Packard Co.
4604 MacCorkle Ave., S.E.
CHARLESTON, WV 25304
Tel: (304) 925-0492
A,CM,MS

Wisconsin
Hewlett-Packard Co.
150 S. Sunny Slope Road
BROOKFIELD, WI 53005
Tel: (414) 784-8800
A,CH,CM,CS,E*,MP

URUGUAY
Pablo Ferrando S.A.C. e I
Avenida Italia 2877
Casilla de Correo 370
MONTEVIDEO
Tel: 80-2586
Telex: Public Booth 901
A,CM,E,M

Guillermo Kraft del Uruguay S.A.
Av. Lib. Brig. Gral. Lavalleja 2083
MONTEVIDEO
Tel: 234588, 234808, 208830
Telex: 6245 ACTOUR UY
P

U.S.S.R.
Hewlett-Packard Co.
Representative Office
Pokrovsky Blvd. 4/17 KV12
MOSCOW 101000 Tel: 294-2024
Telex: 7825 HEWPACK SU

VENEZUELA
Hewlett-Packard de Venezuela C.A.
Apartado 50933
3A Transversal Los Ruices Norte
Edificio Segre
CARACAS 1071
Tel: 239-4133
Telex: 25146 HEWPACK
A,CH,CS,E,MS,P

YUGOSLAVIA
Iskra-Commerce-Representation of Hewlett-Packard
Sava Centar Delegacija 30
Milentija Popovica 9
11170 BEOGRAD
Tel. 638-762
Telex: 12042, 12322 YU SAV CEN

Iskra-Commerce-Representation of Hewlett-Packard
Kopriska 46
61000 LJUBLJANA
Tel: 321674, 315879
Telex:

ZAIRE
Computer & Industrial Engineering
25 Avenue de la Justice
B.P. 10-976
Kinshasha 1/Zaire
GOMBE
Tel. 32063
Telex: 21-457 SGEKIN ZR
CH,CS

ZIMBABWE
Field Technical Sales
45 Kelvin Road, North
P.B. 3458
SALISBURY
Tel: 705 231
Telex: 4-122 RH
C,E,M,P

FOR COUNTRIES AND AREAS NOT LISTED:

CANADA

Ontario
Hewlett-Packard (Canada) Ltd.
6877 Goreway Drive
MISSISAUGA, Ontario L4V 1M8
Tel: (416) 678-9430
Telex: 610-492-4246

EASTERN USA

Maryland
Hewlett-Packard Co.
4 Choke Cherry Road
Rockville, MD 20850
Tel: (301) 258-2000

MIDWESTERN USA

Illinois
Hewlett-Packard Co
5201 Tollview Drive
ROLLING MEADOWS, IL 60008
Tel: (312) 255-9800

SOUTHERN USA

Georgia
Hewlett-Packard Co
P.O. Box 105005
450 Interstate N. Parkway
ATLANTA, GA 30339
Tel: (404) 955-1500

WESTERN USA

California
Hewlett-Packard Co
3939 Lankersim Blvd
LOS ANGELES, CA 91604
Tel: (213) 877-1282

EUROPEAN AREAS NOT LISTED, CONTACT SWITZERLAND
Hewlett-Packard S.A.
7 Rue du Bois-du-Lan
CH-1217 **MEYRIN 2**, Switzerland
Tel: (022) 83-81-11
Telex: 27835 hpse
Cable: HEWPACKSA Geneve

EAST EUROPEAN AREAS NOT LISTED, CONTACT AUSTRIA
Hewlett-Packard Ges m.b.h.
Wehrstrasse 29
P.O. Box 7
A-1205 VIENNA
Tel: (222) 35-16-210
Telex: 135823/135066

MEDITERRANEAN AND MIDDLE EAST AREAS NOT LISTED, CONTACT GREECE
Hewlett-Packard S.A.
Mediterranean & Middle East Operations
32 Kifissias Ave
Athina Center
PARADISOS, Amarousssion
Tel: 808-1741-4
Telex: 21-6588 HPAT GR
Cable: HEWPACKSA Athens

INTERNATIONAL AREAS NOT LISTED, CONTACT OTHER AREAS
Hewlett-Packard Co.
Intercontinental Headquarters
3495 Deer Creek Road
PALO ALTO, CA 94304
Tel: (415) 857-1501
Telex: 034-8300
Cable: HEWPACK

August 1981 5952-6900

FOR COUNTRIES AND AREAS NOT LISTED, CONTACT:

AFRICA

NORTHERN AND CENTRAL AFRICA

SWITZERLAND
Hewlett-Packard S.A.
7 Rue du Bois-du-Lan
CH-1217 **MEYRIN 2**, Switzerland
Tel: (022) 98-96-51
Telex: 27835 hpse
Cable: HEWPACKSA Geneve

ASIA

HONG KONG
Hewlett-Packard Asia Ltd.
6th Floor, Sun Hung Kai Center
30 Harbor Rd.
G.P.O. Box 795
HONG KONG
Tel: 5-832 3211
Telex: 66678 HEWPA HX
Cable: HP ASIA LTD Hong Kong

EUROPE

EASTERN EUROPE

AUSTRIA
Hewlett-Packard Ges m.b.h.
Wehrstrasse 29
P.O.Box 7
A-1205 **VIENNA**
Tel. (222) 35-16-210
Telex: 135823/135066

NORTHERN EUROPE

THE NETHERLANDS
Hewlett-Packard S.A.
Uilenstede 475
NL-1183 AG **AMSTELVEEN**, The Netherlands
P.O.Box 999
NL-1180 AZ **AMSTELVEEN**, The Netherlands
Tel. 20 437771

SOUTH EASTERN EUROPE

SWITZERLAND
Hewlett-Packard S.A.
7 Rue du Bois-du-Lan
CH-1217 **MEYRIN 2**, Switzerland
Tel. (022) 98-96-51
Telex: 27835 hpse
Cable: HEWPACKSA Geneve
(Offices in the World Trade Center)

MEDITERRANEAN AND MIDDLE EAST

GREECE
Hewlett-Packard S.A.
Mediterranean and Middle East Operations
Afrina Centre
32 Kifissias Ave
Amarousssion, ATHENS, Greece
Tel. 808-0359 808-0429
Telex: 21-6588
Cable: HEWPACKSA Athens

OTHER INTERNATIONAL AREAS
Hewlett-Packard Co.
Intercontinental Headquarters
3495 Deer Creek Road
PALO ALTO, CA 94304
Tel. (415) 857-1501
Telex: 034-8300
Cable: HEWPACK

OPERATING AND SERVICE MANUAL

MODEL 1311B
X-Y DISPLAY

(Including Options 639, 001, 003, 604, and 002.)

SERIAL NUMBERS

This manual applies directly to instruments with serial numbers prefixed **1943A.**

J. Bachofen
C. Fox
H. Goller
M. Harms
R. Larson

© COPYRIGHT HEWLETT-PACKARD COMPANY/COLORADO SPRINGS DIVISION 1980
1900 GARDEN OF THE GODS ROAD, COLORADO SPRINGS, COLORADO, U.S.A.

ALL RIGHTS RESERVED

Manual Part Number 01311-90912
Microfiche Part Number 01311-90812

PRINTED: SEPTEMBER 1980

SAFETY

This product has been designed and tested according to International Safety Requirements. To ensure safe operation and to keep the product safe, the information, cautions, and warnings in this manual must be heeded. Refer to Section I and the Safety Summary for general safety considerations applicable to this product.

CERTIFICATION

Hewlett-Packard Company certifies that this product met its published specifications at the time of shipment from the factory. Hewlett-Packard further certifies that its calibration measurements are traceable to the United States National Bureau of Standards, to the extent allowed by the Bureau's calibration facility, and to the calibration facilities of other International Standards Organization members.

WARRANTY

This Hewlett-Packard product is warranted against defects in material and workmanship for a period of one year from date of shipment. During the warranty period, Hewlett-Packard Company will, at its option, either repair or replace products which prove to be defective.

The cathode-ray tube (CRT) in the instrument and any replacement CRT purchased from HP are also warranted against electrical failure for a period of one year from the date of shipment from Colorado Springs. BROKEN TUBES AND TUBES WITH PHOSPHOR OR MESH BURNS, HOWEVER, ARE NOT INCLUDED UNDER THIS WARRANTY.

For warranty service or repair, this product must be returned to a service facility designated by HP. However, warranty service for products installed by HP and certain other products designated by HP will be performed at Buyer's facility at no charge within the HP service travel area. Outside HP service travel areas, warranty service will be performed at Buyer's facility only upon HP's prior agreement and Buyer shall pay HP's round trip travel expenses.

For products returned to HP for warranty service, Buyer shall prepay shipping charges to HP and HP shall pay shipping charges to return the product to Buyer. However, Buyer shall pay all shipping charges, duties, and taxes for products returned to HP from another country.

LIMITATION OF WARRANTY

The foregoing warranty shall not apply to defects resulting from improper or inadequate maintenance by Buyer, Buyer-supplied software or interfacing, unauthorized modification or misuse, operation outside of the environmental specifications for the product, or improper site preparation or maintenance.

NO OTHER WARRANTY IS EXPRESSED OR IMPLIED. HP SPECIFICALLY DISCLAIMS THE IMPLIED WARRANTIES OF MERCHANTABILITY AND FITNESS FOR A PARTICULAR PURPOSE.

EXCLUSIVE REMEDIES

THE REMEDIES PROVIDED HEREIN ARE BUYER'S SOLE AND EXCLUSIVE REMEDIES. HP SHALL NOT BE LIABLE FOR ANY DIRECT, INDIRECT, SPECIAL, INCIDENTAL, OR CONSEQUENTIAL DAMAGES, WHETHER BASED ON CONTRACT, TORT, OR ANY OTHER LEGAL THEORY.

ASSISTANCE

Product maintenance agreements and other customer assistance agreements are available for Hewlett-Packard products.

For any assistance, contact your nearest Hewlett-Packard Sales and Service Office. Addresses are provided at the back of this manual.

S C W & A 9/78 (CRT)

SAFETY SUMMARY

The following general safety precautions must be observed during all phases of operation, service, and repair of this instrument. Failure to comply with these precautions or with specific warnings elsewhere in this manual violates safety standards of design, manufacture, and intended use of the instrument. Hewlett-Packard Company assumes no liability for the customer's failure to comply with these requirements.

GROUND THE INSTRUMENT.

To minimize shock hazard, the instrument chassis and cabinet must be connected to an electrical ground. The instrument is equipped with a three-conductor ac power cable. The power cable must either be plugged into an approved three-contact electrical outlet or used with a three-contact to two-contact adapter with the grounding wire (green) firmly connected to an electrical ground (safety ground) at the power outlet. The power jack and mating plug of the power cable meet International Electrotechnical Commission (IEC) safety standards.

DO NOT OPERATE IN AN EXPLOSIVE ATMOSPHERE.

Do not operate the instrument in the presence of flammable gases or fumes. Operation of any electrical instrument in such an environment constitutes a definite safety hazard.

KEEP AWAY FROM LIVE CIRCUITS.

Operating personnel must not remove instrument covers. Component replacement and internal adjustments must be made by qualified maintenance personnel. Do not replace components with power cable connected. Under certain conditions, dangerous voltages may exist even with the power cable removed. To avoid injuries, always disconnect power and discharge circuits before touching them.

DO NOT SERVICE OR ADJUST ALONE.

Do not attempt internal service or adjustment unless another person, capable of rendering first aid and resuscitation, is present.

USE CAUTION WHEN EXPOSING OR HANDLING THE CRT.

Breakage of the Cathode-ray Tube (CRT) causes a high-velocity scattering of glass fragments (implosion). To prevent CRT implosion, avoid rough handling or jarring of the instrument. Handling of the CRT shall be done only by qualified maintenance personnel using approved safety mask and gloves.

DO NOT SUBSTITUTE PARTS OR MODIFY INSTRUMENT.

Because of the danger of introducing additional hazards, do not install substitute parts or perform any unauthorized modification of the instrument. Return the instrument to a Hewlett-Packard Sales and Service Office for service and repair to ensure that safety features are maintained.

DANGEROUS PROCEDURE WARNINGS.

Warnings, such as the example below, precede potentially dangerous procedures throughout this manual. Instructions contained in the warnings must be followed.

WARNING

Dangerous voltages, capable of causing death, are present in this instrument. Use extreme caution when handling, testing, and adjusting.

TABLE OF CONTENTS

Section			Page
I	GENERAL INFORMATION		1-1
	1-1.	Introduction	1-1
	1-3.	Specifications	1-1
	1-5.	Instruments Covered by Manual	1-1
	1-10.	Description	1-2
	1-12.	Special Features	1-2
	1-16.	Options	1-2
	1-18.	Accessories Supplied	1-4
	1-20.	Equipment Available	1-4
	1-22.	Recommended Test Equipment	1-4
II	INSTALLATION		2-1
	2-1.	Introduction	2-1
	2-3.	Initial Inspection	2-1
	2-5.	Preparation for Use	2-1
	2-6.	Power Requirements	2-1
	2-7.	AC Line Voltage Selection	2-1
	2-9.	AC Power Cable	2-1
	2-10.	Operating Environment	2-1
	2-14.	Storage and Shipment	2-2
	2-16.	Packaging	2-2
III	OPERATION		3-1
	3-1.	Introduction	3-1
	3-3.	Panel Features	3-1
	3-5.	Controls and Connectors	3-1
	3-7.	Input Impedance Switches	3-1
	3-8.	Phosphor Protection	3-1
	3-9.	Preoperational Procedure	3-1
	3-11.	Interfacing Considerations	3-1
	3-12.	General	3-1
	3-13.	Input Configuration Label	3-3
	3-14.	Attenuators	3-3
	3-15.	Polarity	3-3
	3-16.	Bandwidth Reduction	3-3
	3-17.	Ringing	3-3
	3-18.	Performance Specifications	3-3
	3-19.	Spot Size and Resolution	3-3
	3-22.	Brightness	3-4
	3-25.	Settling Time	3-4
	3-26.	Linearity	3-5
	3-27.	Operator Maintenance	3-5
IV	PERFORMANCE TESTS		4-1
	4-1.	Introduction	4-1
	4-3.	Equipment Required	4-1
	4-5.	Test Record	4-1
	4-7.	Calibration Cycle	4-1
	4-10.	X-Y Amplifier Bandwidth	4-1
	4-11.	X-Deflection Factor	4-3
	4-12.	Y-Deflection Factor	4-4
	4-13.	Repeatability	4-5
	4-14.	Crosstalk	4-6
	4-15.	Z-Axis Blanking Polarity	4-7
	4-16.	Settling Time	4-8
V	ADJUSTMENTS		5-1
	5-1.	Introduction	5-1
	5-3.	Safety Requirements	5-1
	5-5.	Equipment Required	5-1
	5-7.	Adjustments	5-1
	5-10.	Adjustment Procedures	5-1
	5-11.	Low-Voltage Power Supply Adjustments	5-3
	5-12.	High-Voltage Power Supply Adjustments	5-4
	5-13.	Z-Axis Balance Adjustments	5-6
	5-14.	Z-Axis Gain, Offset, and Intensity Limit Adjustments	5-6
	5-15.	Z-Axis Pulse Response	5-7
	5-16.	X-Amplifier Gain Adjustment	5-8
	5-17.	Y-Amplifier Gain Adjustment	5-8
	5-18.	X-Amplifier DC Balance	5-9
	5-19.	Y-Amplifier DC Balance	5-9
	5-20.	X-Amplifier Pulse Response and Bandwidth Adjustments	5-10
	5-21.	Y-Amplifier Pulse Response and Bandwidth Adjustments	5-12
	5-22.	Trace-Align and Ortho Adjustment	5-14
	5-23.	Dynamic Focus and Astigmatism Adjustment	5-14
	5-24.	Dynamic Focus and Astigmatism Adjustment (Alternate Procedure	5-18
VI	REPLACEABLE PARTS		6-1
	6-1.	Introduction	6-1
	6-3.	Abbreviations	6-1
	6-5.	Replaceable Parts List	6-1
	6-7.	Ordering Information	6-1
	6-10.	Direct Mail Order System	6-1
VII	MANUAL CHANGES		7-1
	7-1.	Introduction	7-1

TABLE OF CONTENTS (Cont'd)

Section		Page
VIII	SERVICE	8-1
8-1.	Introduction	8-1
8-4.	Theory of Operation	8-1
8-6.	Troubleshooting	8-1
8-7.	Initial Troubleshooting Procedure	8-1
8-8.	DC Voltages and Waveforms	8-1
8-9.	Recommended Test Equipment	8-1
8-11.	Repair	8-1
8-12.	Assembly Removal	8-1
8-13.	Preventive Maintenance	8-1
8-15.	Circuit Boards	8-2
8-16.	Board Connections	8-2
8-17.	Servicing Etched Circuit Boards	8-2
8-18.	Service Sheet 1 Principles of Operation	8-2
8-19.	General	8-2
8-20.	Deflection Amplifiers	8-2
8-21.	Z-axis Amplifier	8-2
8-22.	Phosphor Protection	8-2
8-23.	Dynamic Focus and Astigmatism	8-2
8-24.	Low Voltage Power Supply	8-2
8-25.	High Voltage Power Supply	8-2
8-26.	Service Sheet 2 Principles of Operation	8-4
8-27.	Input Amplifier and Gain Control Circuit (Q1A, Q1B)	8-4
8-28.	Gain Control (U1, U2, Q5)	8-4
8-29.	Service Sheet 3 Principles of Operation	8-6
8-30.	X-Y Output Amplifier (Q4 through Q9, Q10 through Q15)	8-6
8-31.	Troubleshooting	8-6
8-32.	Service Sheet 4 Principles of Operation	8-8
8-33.	Impedance Converter and Gain Control (A5Q1, A5U1)	8-8
8-34.	Z-axis Output Amplifier (A5Q5 through A5Q8)	8-8
8-36.	Service Sheet 5 Principles of Operation	8-10
8-37.	Dynamic Focus	8-10
8-38.	X-Y Input Amplifiers (A6Q1 through A6Q4)	8-10
8-39.	Current Amplifiers (Q5, Q6, Q7, Q8)	8-10
8-40.	Focus Output (A6Q22 through A6Q25)	8-10
8-41.	Z-axis Focus Correction (A6, Q9, Q10, Q11)	8-10
8-42.	Service Sheet 6 Principles of Operation	8-12
8-43.	Dynamic Astigmatism	8-12
8-44.	X-Y Input Amplifiers (A6Q13 through (A6Q16)	8-12
8-45.	Current Amplifiers (A6Q17 through A6Q20)	8-12
8-46.	Focus Output Amplifier (A6Q21)	8-12
8-47.	Service Sheet 7 Principles of Operation	8-14
8-48.	Oscillator Power Supply (A9Q4, A9VR1, A9CR16)	8-14
8-49.	High Voltage Oscillator (A9Q5, Primary of A9T1)	8-14
8-50.	Cathode Supply (A9CR7, Secondary of A9T1)	8-14
8-51.	High Voltage Regulator (A9U1)	8-14
8-52.	High Voltage Shutdown (A9U2, A9Q3, A9U1)	8-14
8-53.	Purpose	8-14
8-54.	Causes of X-ray Emissions	8-14
8-55.	Preventing X-ray Emissions	8-14
8-56.	Principles of Operation	8-14
8-57.	Troubleshooting	8-14
8-58.	CRT Circuits	8-14
8-59.	Grid Level Translator (A9CR9, A9CR10, A9CR11, A9CR12)	8-14
8-60.	Focus Level Translator (A9CR8, A9CR13, A9CR14, A9CR15)	8-14
8-61.	Filament and PA Supply (P/O T1, A10)	8-14
8-62.	Service Sheet 8 Principles of Operation	8-16
8-63.	+250 V Supply (A11CR1 through A11CR4, A11Q1 through A11R3, Q2)	8-16
8-64.	-15 V Supply (A11CR9 through A11CR12, A6Q6, A6Q7, Q3)	8-16
8-65.	+15 V Supply (A11CR5 through A11CR6, A6Q4, A6Q5, Q2)	8-16

LIST OF ILLUSTRATIONS

Figure	Title	Page
1-1.	X-Y Display	1-0
1-2.	Dimensional Detail, 1311B	1-3
2-1.	Line Voltage Selection Switches	2-1
2-2.	Power Cables Available	2-2
3-1.	Controls and Connectors	3-2
3-2.	Input Configuration Label	3-3
3-3.	Input Termination Impedance of Displays Connected in Parallel	3-3
3-4.	Brightness Versus Cross Section of Typical CRT Spot	3-4
3-5.	Settling Time	3-5
3-6.	Linearity of Beam Position Showing Ideal Position and Possible Error	3-5
4-1.	Amplifier Bandwidth Test Setup	4-2
4-2.	X-Deflection Factor Test Setup	4-3
4-3.	Y-Deflection Factor Test Setup	4-4
4-4.	Repeatability Test Setup	4-5
4-5.	Cross Talk Test Setup	4-6
4-6.	Z-Axis Blanking Polarity Test Setup	4-7
4-7.	Settling Time Test Setup	4-8
4-8.	Settling Time Measurement with 1 V Input	4-9
4-9.	Settling Time Measurement with 100 mV Input	4-9
5-1.	1311B Top View	5-2
5-2.	1311B Bottom View	5-2
5-3.	High-Voltage Shutdown Circuit Nomograph	5-5
5-4.	Low-Voltage and High-Voltage Power Supply Adjustment Locations	5-5
5-5.	Z-Axis Gain and Offset Adjustment	5-6
5-6.	Z-Axis Amplifier Adjustment Locations	5-7
5-7.	Gain-set Adjustment Test Setup	5-8
5-8.	X-Amplifier Pulse Response and Bandwidth Adjustment Setup	5-10
5-9.	X-Amplifier Pulse Response Adjustment	5-11
5-10.	Y-Amplifier Pulse Response and Bandwidth Adjustment Setup	5-12
5-11.	Y-Amplifier Pulse Response Adjustment	5-13
5-12.	X-Y-Amplifier Adjustment Locations	5-13
5-13.	Dynamic Focus and Astigmatism Test Setup	5-14
5-14.	Focus and Astigmatism Test Pattern	5-16
5-15.	Focus and Astigmatism Output Waveforms	5-17
5-16.	Dynamic Focus and Astigmatism Test Setup	5-18
5-17.	Focus and Astigmatism Waveforms	5-18
5-18.	Beam Locations For Focus and Astigmatism Procedure	5-19
5-19.	Focus and Astigmatism Adjustment Locations	5-19
6-1.	Chassis Parts and Board Assembly Identification	6-3
8-1.	Schematic Diagram Symbols	8-0
8-2.	Service Sheet 1, Overall Block Diagram	8-3
8-3.	Simplified Schematic of X-Y Gain Control	8-4
8-4.	X-Y Input Amplifier (A1, A3) Component Locator	8-4
8-5.	Service Sheet 2, X-Y Axis Input Amplifier (A1, A3) Schematic	8-5
8-6.	Simplified Output Amplifier Schematic	8-6
8-7.	X-Y Output Amplifier (A2, A4) Component Locator	8-6
8-8.	Control Board (A13) Component Locator	8-7
8-9.	Service Sheet 3, X-Y Axis Output Amplifier (A2, A4) Schematic	8-7
8-10.	Simplfied Schematic of Z-axis Gain Control	8-8
8-11.	Simplified Block Diagram of the Phosphor Protection Circuit	8-8
8-12.	Z-axis Amplifier (A5) Component Locator	8-8
8-13.	Service Sheet 4, Z-axis Amplifier (A5) Schematic	8-9
8-14.	Part of Focus and Astigmatism Amplifier (A6) Component Locator	8-10
8-15.	Service Sheet 5, Dynamic Focus (A6) Schematic	8-11
8-16.	Part of Focus and Astigmatism Amplifier (A6) Component Locator	8-12
8-17	Service Sheet 6, Dynamic Astigmatism (A6) Schematic	8-13
8-18.	Simplified Schematic of High Voltage Regulator Circuit	8-14
8-19.	Simplified Schematic of High Voltage Shutdown Circuit	8-14
8-20.	High Voltage Power Supply (A9) Component Locator	8-14
8-21.	Service Sheet 7, High Voltage Power Supply (A9) Schematic	8-15
8-22.	Low Voltage Power Supply (A11) Component Locator	8-16
8-23.	Service Sheet 8, Low Voltage Power Supply (A11) Schematic	8-17
8-24.	Left and Right Connector Board Wiring Diagram	8-18
8-25.	Main Wiring Diagram	8-19

LIST OF TABLES

Table	Title	Page
1-1.	Specifications	1-1
1-2.	Supplemental Characteristics	1-2
1-3.	Standard Options	1-4
1-4.	Recommended Test Equipment	1-5
5-1.	Low Voltage and High Voltage Power Supply Adjustments	5-5
5-2.	Z-Axis Amplifier Adjustments	5-7
5-3.	X-Y Amplifier Adjustments	5-13
5-4.	Focus and Astigmatism Test Program	5-15
5-5.	Focus and Astigmatism Adjustments	5-19
6-1.	Reference Designators and Abbreviations	6-2
6-2.	Replaceable Parts	6-6
6-3.	List of Manufacturers' Codes	6-28
8-1.	Service Sheet Quick Reference	8-1
8-2.	Troubleshooting Guide for X-Y Output Amplifier	8-6
8-3.	Troubleshooting Hints for High High Voltage Shutdown Circuit	8-14

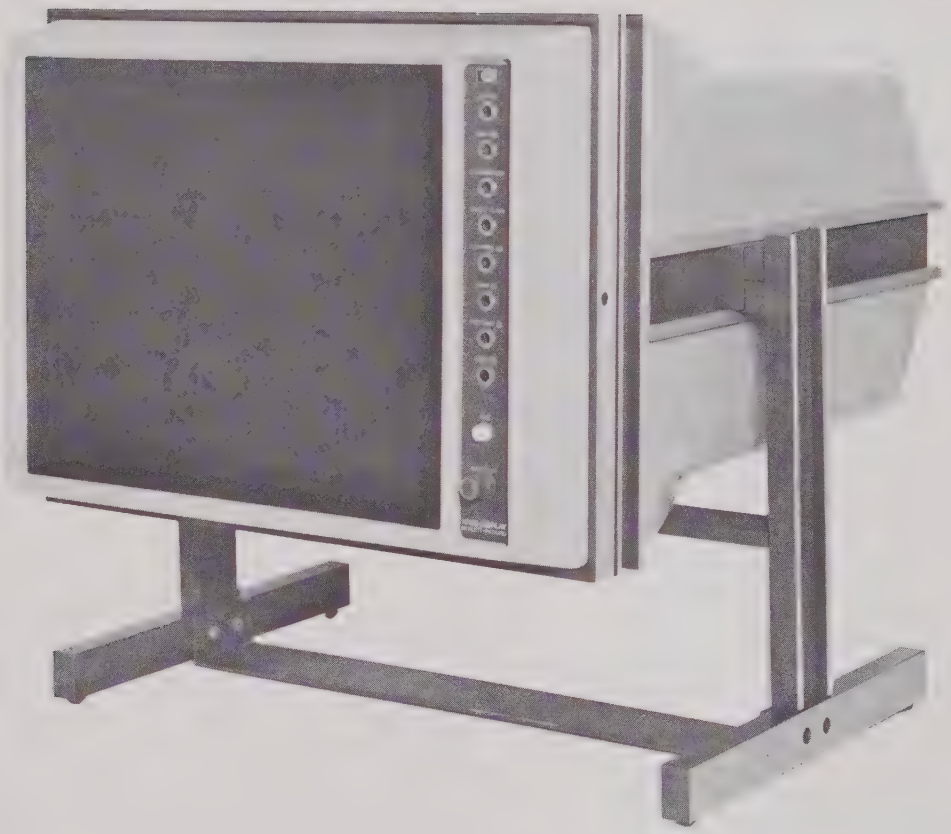

Figure 1-1. X-Y Display

SECTION I

GENERAL INFORMATION

1-1. INTRODUCTION.

1-2. This operating and service manual contains information required to install, operate, test, adjust, and service Hewlett-Packard Model 1311B. The manual part number is listed on the title page. Also listed on the title page of this manual is a Microfiche part number. This number can be used to order 4x6-inch microfilm transparencies of the manual. Each microfiche contains up to 96 photo-duplicates of the manual pages. The microfiche package also includes the latest Manual Changes supplement as well as a pertinent Service Note.

1-3. SPECIFICATIONS.

1-4. Instrument specifications are listed in table 1-1. These specifications are the performance standards or limits against which the instrument is tested. Table 1-2 lists supplemental characteristics. Supplemental characteristics are not specifications but are typical characteristics included as additional information for the user.

1-5. INSTRUMENTS COVERED BY MANUAL.

1-6. Attached to the instrument is a serial number plate. The serial number is in the form: 0000A00000. It is in two parts; the first four digits and the letter are serial prefix and the last five digits are the suffix. The prefix is the same for all identical instruments; it changes only when a change is made to the instrument. The suffix however, is assigned sequentially and is different for each instrument. The contents of this manual apply to instruments with the serial number prefix(es) listed under SERIAL NUMBERS on the title page.

1-7. An instrument manufactured after the printing of this manual may have a serial number prefix that is not listed on the title page. This unlisted serial number prefix indicates the instrument is different from those described in this manual. The manual for this newer instrument is accompanied by a yellow Manual Change supplement. This supplement contains "change information" that explains how to adapt the manual to the newer instrument.

1-8. In addition to change information, the supplement may contain information for correcting errors in the manual. To keep this manual as current and accurate as possible, Hewlett-Packard recommends that you periodically request the latest Manual Change supplement. The supplement for this manual is identified with the manual print date and part number, both of which appear on the manual title page. Complementary copies of the supplement are available from Hewlett-Packard.

1-9. For Information concerning a serial number prefix that is not listed on the title page or in the Manual Change supplement, contact your nearest Hewlett-Packard office.

Table 1-1. Specifications

VERTICAL AND HORIZONTAL AMPLIFIERS

RISE TIME: <75 ns, 10% to 90% points for full screen deflection.

BANDWIDTH: dc to 5 MHz (3 dB down at 5 MHz) with 8.9 cm (3.5 in.) deflection.

LINEAR WRITING SPEED: >25.4 cm/μs (>10 in./μs).

SETTLING TIME: signal settles to within 1 spot diameter of final value in <500 ns for any on screen movements.

REPEATABILITY: <0.15% of full screen error in readdressing any point on screen from any point on screen.

CROSSTALK: <0.38 mm (<0.015 in.) with one input terminated in 50Ω and the other input driven by 1 V, 500 kHz signal.

DEFLECTION FACTOR: front panel adjustable through the range indicated below:

Vertical	Horizontal
from approx. 46.3 mV/cm (118 mV/in.) to 81 mV/cm (207 mV/in.)	from approx. 35.8 mV/cm (90 mV/in.) to 60.9 mV/cm (153 mV/in.)

SPOT JITTER AND MOTION: 0.13 mm (0.005 in.) with X INPUT and Y INPUT disconnected.

POSITION: zero input can be set to any on-screen position.

POLARITY: positive vertical input moves the beam up; positive horizontal input moves the beam right. Polarity can be changed by changing internal lead connections.

Table 1-1. Specifications (Cont'd)

X-Y INPUT: rear panel BNC female connectors with floating shield.
X-Y INPUT IMPEDANCE: 50Ω, switchable to 10 kΩ shunted by 40 pF.
MAXIMUM INPUT: ±50 V (dc + peak ac) with 10 kΩ internal termination. ±5 V (dc + peak ac) with 50Ω internal termination.
LINEARITY: 1% of full scale display (along major axes).
DRIFT: 1.27 mm/hr (0.05 in./hr) and 2.54 mm/hr (0.10 in./hr) in 24 hours with covers installed.

Z-AXIS AMPLIFIER

RISE TIME: <25 ns.
SENSITIVITY: –1 V signal blanks trace; +1 V signal (INTENSITY at maximum) provides maximum intensity. Polarity may be reversed by changing internal lead connections.
GAIN ADJUST: adjustable by INTENSITY control over 5:1 attenuation ratio.
BALANCE: internal adjustment provides ±1 V offset.
Z-INPUT: rear panel BNC female connector with grounded shield.
Z-INPUT IMPEDANCE: 50Ω switchable to 10 kΩ shunted by 60 pF.
TTL BLANKING: high state blanks CRT. (POLARITY REVERSIBLE)
MAXIMUM INPUT: ±50 V (dc + peak ac) with 10 kΩ internal termination. ±5 V (dc + peak ac) with 50Ω internal termination.

CATHODE-RAY TUBE

VIEWING AREA: 20.3 x 25.4 cm (8 x 10 in.)
TYPE: post-accelerator, 28.5 kV accelerating potential, P31 aluminized phosphor is standard. Electrostatic focus and deflection.
SPOT SIZE: 0.38 mm (0.015 in.) over entire viewing area.
RESOLUTION:
Center: .043 cm (.017 in.)
Corner: typically <.05 cm (<.02 in.)
BRIGHTNESS: at least 84 cd/m² (50 fl) measured at 2.54 mm/μs (0.1 in./μs), 60 Hz rate, with spot size of 0.5 mm (0.020 in.).
CONTRAST RATIO: 4:1 or greater.
X-RAY EMISSION: CRT emission <0.2 mR/hr; not measurable in background noise using Victoreen Model 440RF/C.
IMPLOSION PROTECTION: rim and tension banding prevents implosive devacuation. (UL/IEC348).
PHOSPHOR PROTECTION: circuit detects absence of deflection signals and limits beam current.

Table 1-2. Supplemental Characteristics

POWER: selectable to 100 Vac, 120 Vac, 220 Vac, and 240 Vac +5%-10%, 48 Hz to 440 Hz, 115 Va maximum.

ENVIRONMENT:

ALTITUDE: 4600m (15000 ft) operating at 25° C 7600m (25000 ft) non-operating.
TEMPERATURE: 0° C to +55° C operating; –40° C to +70° C non-operating.
HUMIDITY: to 95% at 40° C.
VIBRATION: 10-55 Hz at .38 mm (0.015 in.) peak to peak excursion.
SHOCK: level 30g; duration 11 ms; shape 1/2 sine wave.
X, Y, and Z INPUT CONNECTORS: BNC type mounted on rear rail.
WEIGHT: net, 24.7 kg (54.5 lb); shipping 31 kg (68 lb).
DIMENSIONS: refer to figure 1-1 for complete details.

1-10. DESCRIPTION.

1-11. The HP Model 1311B is a large screen, high speed, computer graphic display designed for OEM system applications. The CRT has an aluminized P31 phosphor and a 100% usable viewing area.

1-12. SPECIAL FEATURES.

1-13. Dynamic Focus-Astigmatism. Voltages proportional to the position of the CRT beam are applied to the focus and astigmatism elements of the CRT. This causes spot size and shape to remain constant over the CRT viewing area. Focus is also corrected for changes in intensity level.

1-14. Phosphor Protection. A protection circuit senses slow or static deflection signals and limits beam intensity to prevent burning of the CRT phosphor and mesh.

1-15. Input Modifications. The input circuits to the X, Y, and Z amplifiers are designed to permit easy modification for single ended or differential operation. Additionally, the input termination resistance and the input attenuation ratio for the X and Y amplifiers can be changed.

1-16. OPTIONS.

1-17. Standard options are modifications installed on HP instruments and are available on request. Table 1-3 lists available options for the 1311B.

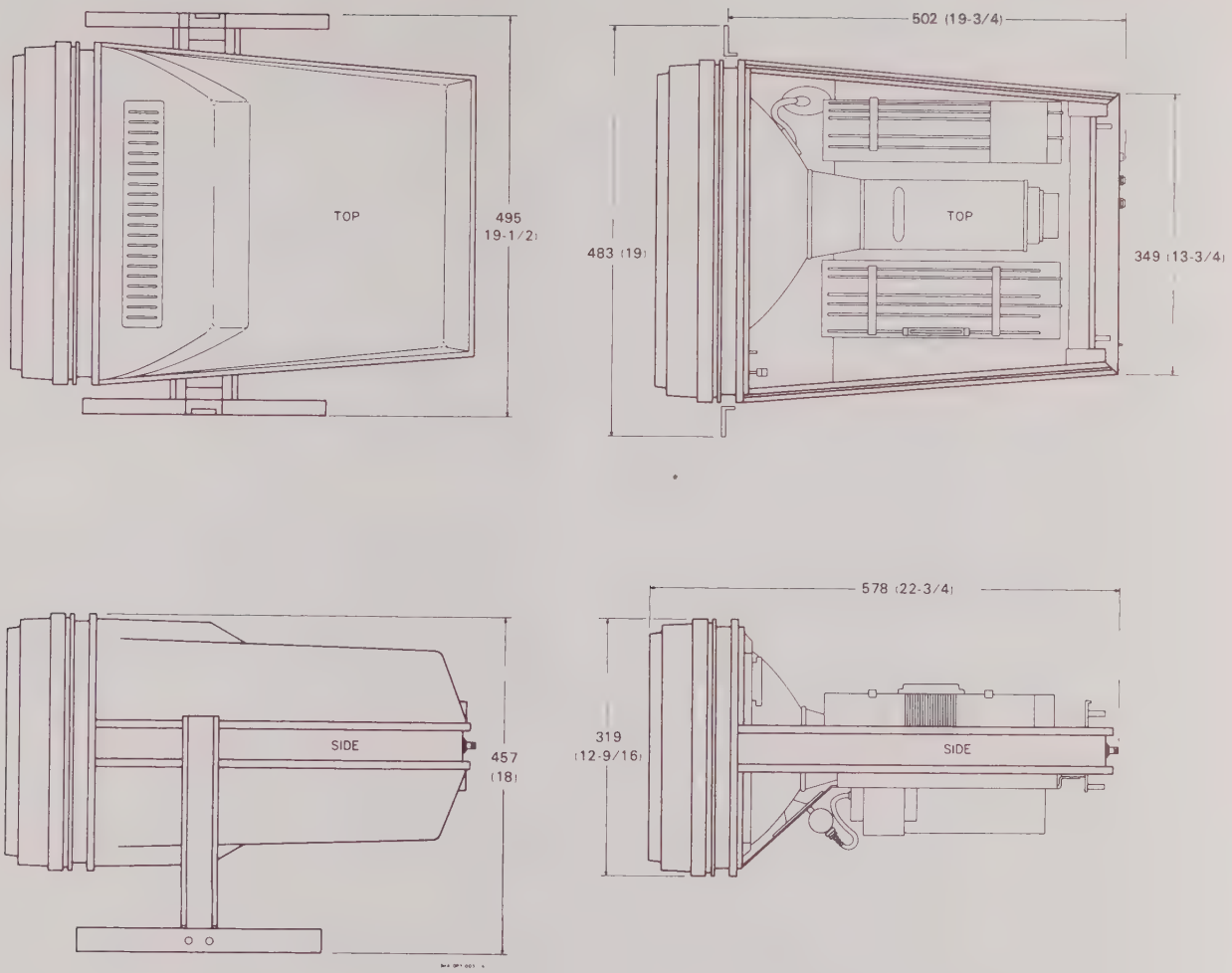

NOTES

1. DIMENSIONS ARE FOR GENERAL INFORMATION ONLY. IF DIMENSIONS ARE REQUIRED FOR BUILDING SPECIAL ENCLOSURES, CONTACT YOUR HP FIELD ENGINEER.
2. DIMENSIONS ARE IN MILLIMETRES AND (INCHES).

Figure 1-2. Dimensional Detail, 1311B

Table 1-3. Standard Options

Option	Description
001	Delete tilt stand and add a rack mount kit.
002	Delete tall tilt stand and add a short tilt stand.
003	Delete contrast control and add brightness control.
004	Delete front panel bezel, contrast filter and tilt stand.
604	P4 phosphor, aluminized, open graticule CRT in lieu of P31.
639	P39 phosphor, aluminized, open graticule CRT in lieu of P31.

1-18. ACCESSORIES SUPPLIED.

1-19. The following accessories are supplied with the 1311B.

One Operating and Service Manual
One AC line cord (for HP Part No. refer to Section II)
One Application Note (Application Note No. 166)
One Tilt Stand

1-20. EQUIPMENT AVAILABLE.

1-21. The following equipment is available for the 1311B:

1 metre four-coax cable HP Model 52126A
1.25 metre three-coax cable HP Model 10488A
Rack mount slide kit, HP Stock No. 01311-68704
Rack mount pivoting slide kit, HP Stock No. 01311-68705.

1-22. RECOMMENDED TEST EQUIPMENT.

1-23. Equipment required to test the 1311B performance is listed in table 1-4. Other equipment may be substituted if it meets or exceeds the critical specifications listed in the table.

Table 1-4. Recommended Test Equipment

Instrument Type	Recommended Model	Required Characteristics	Required For
Monitor Oscilloscope	HP Model 1740A	Bandwidth: 100 MHz Input Z: 50Ω and 1 MΩ shunted by ≃20 pf Vertical Sensitivity: 5 mV	Adjustments
50:1 Divider Probe	HP Model 10002A	Shunt Capacitance: 2.5 pF Resistance 9 MΩ Max. dc Volts 1000 V	Adjustments
Function Generator	HP Model 3312A	Output Waveforms: sine, square, ramp Frequency Range: 1 Hz-10 MHz Square Wave Rise Time: 10% to 90% <18 ms Sine Wave Distortion: <.5% Output Impedance: 50Ω Output Level: 20 V p-p into open circuit, 10 V p-p into 50Ω	Adjustments Performance Checks
Pulse Generator (Qty 2)	HP Model 8013B	Rep Rate: 1 Hz to 10 MHz Output Impedance: 50Ω Output Level: app. 10 V across 50Ω	Adjustments Performance Checks
Digital Voltmeter	HP Model 3465B	Voltage Range: −15 V to 250 V Accuracy: 0.1% Input Resistance: 10 MΩ	Adjustments
1000:1 Divider Probe	HP Model 34111A	Voltage Rating: 10 kV	Adjustments
*Power Supply	HP Model 6234A	Output Voltage: −10 V to +15 V Output Current: 200 ma Short circuit proof	Adjustment Performance Checks
HP-IB Controller	HP Model 9825A	23K byte R/W memory Equipped with: 98210A String Advance Program ROM 98214 Extended I/O ROM	Adjustments
HP-IB Interface	HP Model 98034A	IEEE Std. 488-1975 Interface	
Graphics Translator	HP Model 1350A	Input Interface: HP-IB	Adjustments

*Use only if HP Model 3312A Function Generator is not used.

SECTION II

INSTALLATION

2-1. INTRODUCTION.

2-2. This section provides installation instructions for the Model 1311B X-Y Display. This section also includes information about initial inspection and damage claims, preparation for use, and storage and shipment.

2-3. INITIAL INSPECTION.

2-4. Inspect the shipping container for damage. If the shipping container or cushioning material is damaged, it should be kept until the contents of the shipment have been checked for completeness and the instrument has been checked mechanically and electrically. The contents of the shipment should be as listed in the 'Accessories Supplied' paragraph in section I. Procedures for checking electrical performance are given in Section IV. If the contents are incomplete, if there is mechanical damage or defect, or if the instrument does not pass the Performance Tests, notify the nearest Hewlett-Packard office. If the shipping container is damaged, or the cushioning material shows signs of stress, notify the carrier as well as the Hewlett-Packard office. Keep the shipping material for carrier's inspection. The HP office will arrange for repair or replacement at HP option without waiting for claim settlement.

2-5. PREPARATION FOR USE.

WARNING

Read the Safety Summary in the front of this manual before installing or operating this instrument.

2-6. POWER REQUIREMENTS. The 1311B requires a power source of 100, 120, 220, or 240 Vac +5%, -10%, single phase, 48 Hz to 440 Hz that can deliver approximately 100 VA (maximum). Average power dissipation at 60 Hz and 120 Vac without any options is approximately 74 W.

2-7. AC LINE VOLTAGE SELECTION.

CAUTION

Instrument damage may result if both line voltage selection switches are not set for the proper input voltage.

2-8. The instrument is normally set at the factory for 120 Vac operation. To operate the instrument from any other power source, proceed as follows:

a. Disconnect power cord from 1311B.

b. Using a blade-type screwdriver, position rear-panel LINE VOLTAGE SELECT switches for desired ac input. (Figure 2-1 shows switches set for 120 Vac operation.)

c. For 220 Vac or 240 Vac operation, replace rear-panel fuse (F1) with the 0.8 AT (slow blow) fuse, HP Part No. 2110-0020, supplied with the instrument.

d. Reconnect power cord.

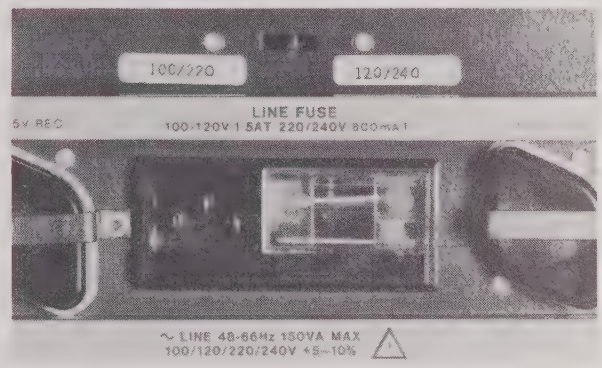

Figure 2-1. Line Voltage Selection Switches

2-9. AC POWER CABLE. This instrument is equipped with a three-wire power cable. When connected to an appropriate ac power receptacle this cable grounds the instrument cabinet. The type of power cable plug shipped with each instrument depends on the country of destination. Figure 2-2 shows the part numbers (and associated Option numbers) for the power cables and plug configurations available.

2-10. OPERATING ENVIRONMENT.

2-11. Temperature. The instrument may be operated in temperatures from 0 degrees C to +55 degrees C (+32 F to +130 F).

2-12. Humidity. The instrument may be operated in environments with humidity up to 95%. However, the instrument should also be protected from temperature extremes which cause condensation within the instrument.

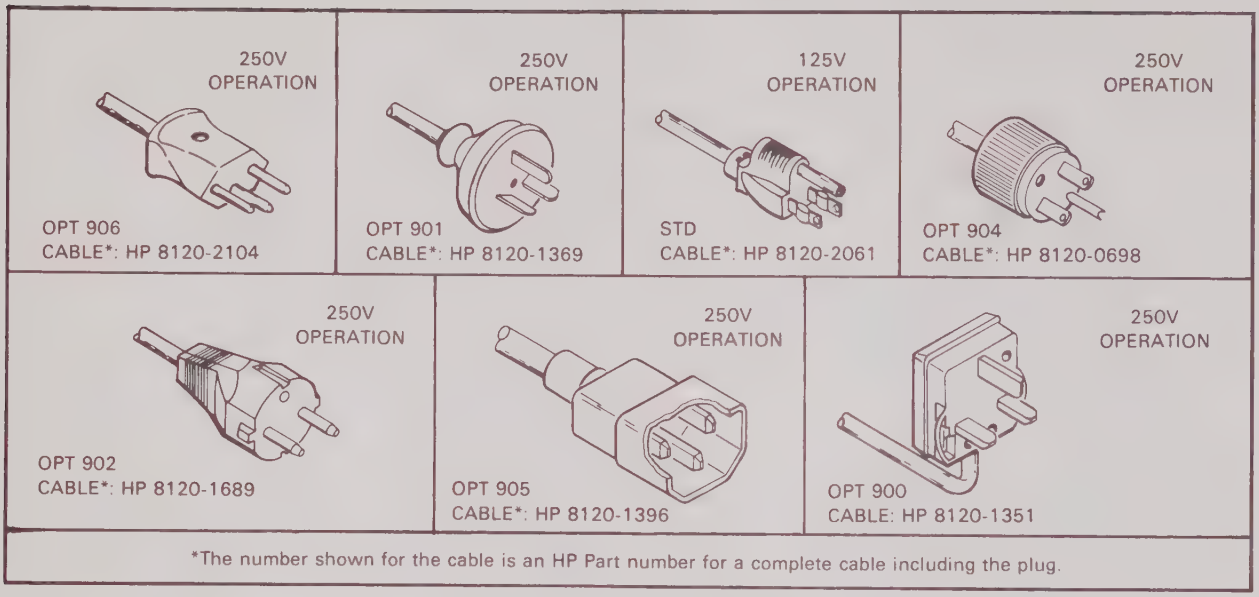

Figure 2-2. Power Cables Available

2-13. Altitude. The instrument may be operated at altitudes up to 4600 m (15,000 ft.).

2-14. STORAGE AND SHIPMENT.

2-15. Environment. The instrument may be stored or shipped in environments within the following limits:

Temperature	-40 degrees C to +70 C (-40 F to +158 F)
Humidity	Up to 95%
Altitude	Up to 7600 m (26,000 ft.)

The instrument should also be protected from temperature extremes which cause condensation within the instrument.

2-16. PACKAGING.

2-17. Original Packaging. Containers and materials identical to those used in factory packaging are available through Hewlett-Packard offices. If the instrument is being returned to Hewlett-Packard for servicing, attach a tag indicating the type of service required, return address, model number, and full serial number. Also mark the container FRAGILE to ensure careful handling. In any correspondence, refer to the instrument by model number and full serial number.

2-18. Other Packaging. The following general instructions should be used for re-packing with commercially available materials:

a. Wrap instrument in heavy paper or plastic. (If shipping to Hewlett-Packard office or service center, attach tag indicating type of service required, return address, model number, and full serial number.)

b. Use strong shipping container. A double-wall carton made of 350-pound test material is adequate.

c. Use a layer of shock-absorbing material 70 to 100 mm (3 to 4 inch) thick around all sides of the instrument to provide firm cushioning and prevent movement inside container. Protect control panel with cardboard.

d. Seal shipping container securely.

e. Mark shipping container FRAGILE to ensure careful handling.

f. In any correspondence, refer to instrument by model number and full serial number.

SECTION III

OPERATION

3-1. INTRODUCTION.

3-2. This section contains information and instructions for operating the HP Model 1311B.

3-3. PANEL FEATURES.

3-4. The instrument is intended for use as a general purpose graphic display. It is an X, Y, Z display with analog voltage inputs for X, Y, and Z-axis controls. All signals must be externally supplied through rear-panel connections. Intensity, focus, X-position, Y-position, astigmatism, X-gain, Y-gain and trace align controls are screwdriver adjustments accessible from the front panel.

3-5. CONTROLS AND CONNECTORS.

3-6. Front and rear panel controls and connectors are described in figure 3-1. Description numbers match the numbers on the illustration. The following paragraphs explain the switches located on printed circuit boards.

WARNING

Dangerous voltages capable of causing serious injury or death are present in this instrument. The following internal switches should be set by qualified personnel only.

3-7. INPUT IMPEDANCE SWITCHES. The input impedance selector switches permit selection of either 50Ω or 10 KΩ for the X, Y, and Z axis amplifiers. A1S1 controls the X amplifier, A3S1 controls the Y axis amplifier, and A5S1 controls the Z axis amplifier.

3-8. PHOSPHOR PROTECTION. The Phosphor Protection switch (A5S1) is located on the right connector board (A8). This switch either enables or disables the phosphor protection circuit.

NOTE

Numbers in parentheses indicate control numbers from figure 3-1.

3-9. PREOPERATIONAL PROCEDURE.

3-10. Prepare the 1311B for operation as follows:

a. Set INTENSITY (10) fully ccw.

b. Set horizontal and vertical POSITION controls (5) (7) to midrange.

c. Turn line switch (11) on. Power indicator lamp should light.

CAUTION

A high-intensity display over an extended period will burn the CRT phosphor.

d. Adjust INTENSITY (10) for a dimly visible display.

e. Adjust Y POSITION (7) through its full range. Display spot will move vertically on CRT, disappearing from the viewing area at either extreme of the control. Center the Y POSITION control.

f. Adjust X POSITION (5) through its full range. Display spot will move horizontally on CRT, disappearing from the viewing area at either extreme of the control. Center the X POSITION control.

g. Adjust FOCUS (1) and ASTIGMATISM (7) controls for smallest, sharpest spot on CRT.

h. Apply a 1 kHz, 1 V p-p sinewave to the X-INPUT (14) connector on rear panel.

i. Adjust TRACE ALIGN (4) to align trace horizontally.

j. Set X-GAIN (6) for a trace length as required for application, but not to exceed 27.9 cm (11 in.).

k. Apply a 1 kHz, 1 V p-p sinewave to the Y-INPUT (15) connector on rear panel and adjust ORTHOG control to cause the trace to lie perpendicular to the X-axis.

l. Set Y-GAIN (8) for a trace length as required by application, but not to exceed 21.7 cm (8.5 in.).

3-11. INTERFACING CONSIDERATIONS.

3-12. GENERAL. Standard sensitivities of the X and Y deflection amplifier are 1 V p-p for full screen deflection. Front panel gain controls for each axis reduce sensitivity to 1.75 V p-p for full screen deflection. X-Y deflection amplifiers may be configured for either single ended or differential operation. Input polarity may also be reversed by interchanging the input cable connections on the rear edge of the input amplifier board (A1 for X amplifier and A3 for Y amplifier). The input impedance selector switches permit selection of either 50Ω or 10 KΩ for the X, Y, and Z axis amplifiers. A1S1 controls the X amplifier, A3S1 controls the Y amplifier, and A5S1 controls the Z axis amplifier.

FRONT PANEL

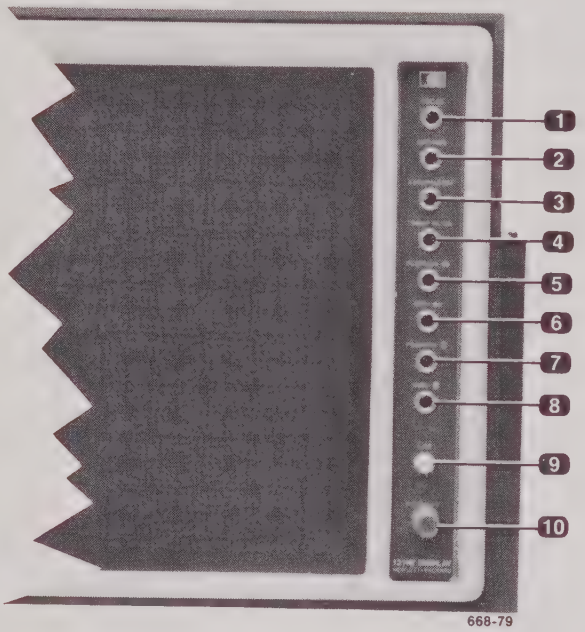

1. **FOCUS.** Focuses the trace; used in conjunction with ASTIG control to provide the sharpest CRT display.

2. **ORTHOGONAL.** Used to adjust perpendicularity of X and Y traces. Operates in conjunction with TRACE ALIGN control.

3. **ASTIGMATISM.** Control which adjusts the roundness of the spot.

4. **TRACE ALIGN.** Rotates X and Y traces about screen center.

   Aligns Y trace to vertical graticule line and X trace to horizontal graticule line. Used in conjunction with ORTHOG control which aligns vertical trace perpendicular to horizontal trace.

5. **POSN X.** Adjusts the trace position horizontally.

6. **GAIN X.** Adjustment for varying the gain of the X-amplifier. Gives 1.75:1 range of adjustment.

7. **POSN Y.** Adjusts the trace position vertically.

8. **GAIN Y.** Adjustment for varying the gain of the Y-amplifier. Gives 1.75:1 range of adjustment.

9. **POWER ON.** Light indicating power is applied to the instrument.

10. **INTENSITY.** Adjusts the brightness of the display.

NOTE

The INTENSITY control will have very little effect on the dot brightness in the absence of a Z-axis input signal.

REAR PANEL

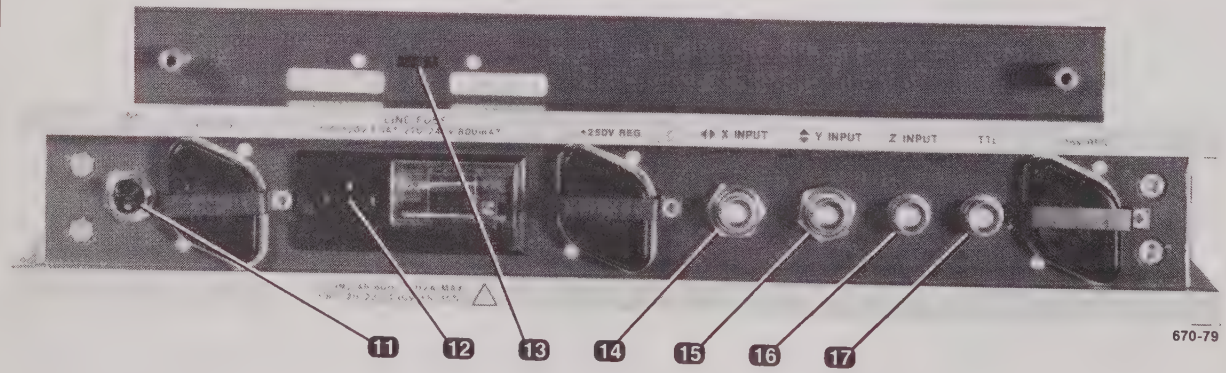

11. **POWER ON switch.** Applies ac power to the instrument.

12. **INPUT ac power cord connector.**

13. **LINE VOLTAGE SELECT.** Selects line voltage for 100/220 or 120/240 V operation.

14. **X INPUT.** X-axis input connector.

15. **Y INPUT.** Y-axis input connector.

16. **Z INPUT.** Z-axis input connector.

17. **TTL INPUT.** TTL input connector for Z-axis control.

Figure 3-1. Controls and Connectors

X-INPUT			Y-INPUT			Z-INPUT		
IMPEDANCE	50Ω	[redacted]	IMPEDANCE	50Ω	[redacted]	IMPEDANCE	50Ω	[redacted]
POLARITY	⎍	[redacted]	POLARITY	⎍	[redacted]	BLANKING POLARITY	⎍	[redacted]
ATTENUATION	1 : 1		ATTENUATION	1 : 1		ATTENUATION	1 : 1	

Figure 3-2. Input Configuration Label

3-13. INPUT CONFIGURATION LABEL. Figure 3-2 is a duplicate of the Input Configuration Label. The information on the label shows the X-Y-Z amplifier input configuration for a standard instrument. If system installation requires any changes, clean the label with isopropyl alcohol and record the new information.

3-14. ATTENUATORS. The 1311B provides full scale X-axis and Y-axis deflection when a 1 V p-p signal is applied to either input. A front-panel GAIN control for each axis reduces sensitivity to 1.75 V p-p for full screen deflection. Attenuators may be added to provide full-scale deflection for input voltages up to ±50 Vdc + peak ac with 10 KΩ internal termination on ±5 V + peak ac with 50Ω internal termination. Space and pads are provided on the X-Y circuit boards for adding attenuators. (See Service Sheet 2 in Section VIII.) Regardless of input attenuation, range of the GAIN control is constant at a ratio of 1.75:1.

3-15. POLARITY. In a standard display, a positive going voltage deflects the beam to the right when applied to the X input center conductor, or up when applied to the Y input center conductor. To change polarity, interchange the input cable connections on the rear edge of the input amplifier board. When mounting the display physically inverted, interchange the CRT deflection plate connections to retain the sense of the position controls and maintain correct input polarity.

3-16. BANDWIDTH REDUCTION. In some cases, the full 5 MHz bandwidth of the deflection amplifier is not needed; in fact, in some applications it may be desirable to reduce the bandwidth to eliminate system noise problems. If the desired bandwidth is approximately 1 MHz or greater, the deflection amplifier can be modified internally by increasing the value of A1C8 and A1C9 for X-amplifier and A3C8 and A3C9 for the Y-amplifier. For a desired 3 dB bandwidth f, the value of C8 and C9 can be calculated with the equation:

$$C = \frac{1}{2 \pi \, fo \, R}$$

Where:

fo = –3 dB bandwidth desired
R = shunt resistance (in this case 1000Ω)
C = required capacitance

NOTE

This formula gives accurate results for bandwidth frequencies below 1 MHz. Above this frequency, other factors also influence the bandwidth; therefore, experimentation is necessary to achieve proper value. Use capacitors that do not exceed 1600 pf ±5% (or better).

3-17. RINGING. Ringing is one possible undesirable side effect of improperly terminated inputs. For instance, an abrupt transition from blanked to unblanked in an improperly terminated Z-axis input line may cause ringing which will appear as intensity fluctuation in the display. For minimum induced crosstalk and ringing, displays connected in parallel should be connected as shown in figure 3-3.

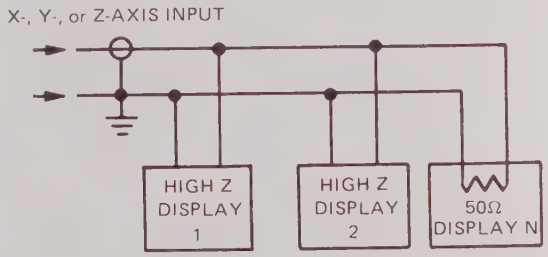

Figure 3-3. Input Termination Impedance of Displays Connected in Parallel

3-18. PERFORMANCE SPECIFICATIONS. Major performance specifications, and their meaning, how they are determined, and how they affect system performance are explained in the following paragraphs.

3-19. SPOT SIZE AND RESOLUTION. If you scan a CRT spot with a microscope photometer and plot brightness versus distance (spot width), the result approximates a Gaussian curve (see figure 3-4). Spot size is the width of the Gaussian curve at its 50% point (see Section I, table 1-2).

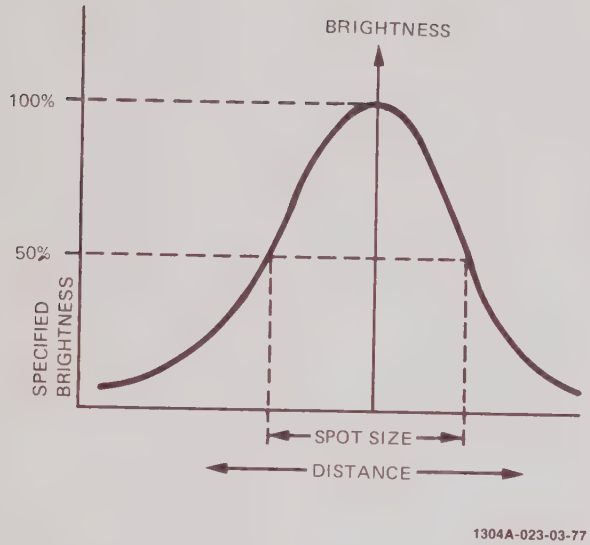

Figure 3-4. Brightness Versus Cross Section of Typical CRT Spot

3-20. In practice, the 50% point can be determined by using the shrinking raster measurement method. The shrinking raster measurement is obtained by displaying a raster of lines (or dots) on the CRT and then adjusting the vertical and horizontal gain until the individual lines (or dots) are no longer individually identifiable. The size of the raster is then divided by the number of lines in the raster to determine the spot size. The point where raster lines (or dots) merge is the theoretical 50% point on the Gaussian curve.

3-21. The shrinking raster method should be used if a scanning microscope photometer is not available, because observing an individual line (or dot) with an optical comparator can be very misleading. On a single dot, the eye can see to about the 3% point on the Gaussian curve. Here the dot appears to be approximately twice the width it is across the 50% points.

3-22. BRIGHTNESS. Brightness is specified only with respect to a specific combination of writing speed, refresh rate, and phosphor (P31 for 1311B). Maximum brightness for other given conditions can be calculated using the following formula:

Where:

$$Bmax = (5.6\ fl)\left(\frac{0.1}{W}\right)\left(\frac{R}{60}\right) EP$$

5.6 fl = specified brightness

W = writing speed in inches per microseconds

EP = phosphor efficiency (relative to P31): P4 and P39 50%.

R = refresh rate in Hz.

3-23. For measuring brightness, two points should be remembered: (1) specific brightness is not measured in radiometric units but in photometric units which are normalized to the spectral response of the human eye, and (2) brightness is directly proportional to the refresh rate and inversely proportional to writing speed.

3-24. The brightness of a spot in a display that is made up of dots may be determined by using the following formula when the dot refresh rate and the pulse width used to generate the dots are known:

$$B = (B\ spec)\left(\frac{(Ws)}{Rs\ Ds\ Cd}\right)$$

Where:

B = minimum spot brightness at full intensity and/or maximum Z-axis input level.

B spec = specified line brightness.

Ws = writing speed at which line brightness is specified.

Rs = refresh rate at which line brightness is specified.

Ds = specified spot diameter.

Cd = duty cycle calculated from: Z-axis pulse width × refresh rate.

3-25. SETTLING TIME. Settling time is defined as the elapsed time between an input step command and the time for the beam to settle within a specified tolerance to its final position (see figure 3-5). Settling time must be taken into account when moving the beam from one location to another. Otherwise, there may be tails on dots or line distortions at the starting point of vectors.

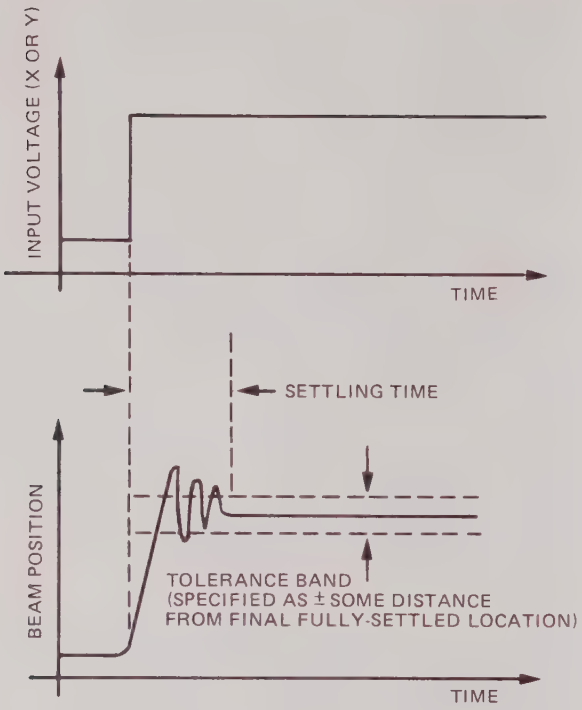

Figure 3-5. Settling Time

3-26. LINEARITY. Linearity (see figure 3-6) refers to the linearity to the relationship between the X or Y input voltage and the beam position (do not confuse this with the geometry specification).

NOTE

Linearity is specified only along the CRT's major axis.

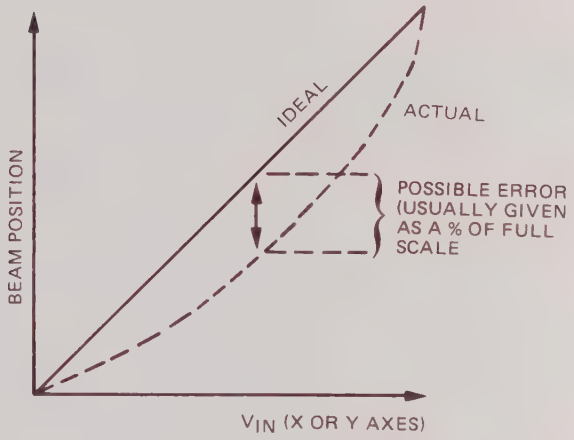

Figure 3-6. Linearity of Beam Position Showing Ideal Position and Possible Error

3-27. OPERATOR MAINTENANCE.

3-28. Operator maintenance should be limited to exterior cleaning of the instrument. Smooth metal surfaces can be cleaned with a commercial glass cleaner. Stubborn residues can be removed with a mild liquid household detergent. The CRT filter should be cleaned only with isopropyl alcohol.

SECTION IV

PERFORMANCE TESTS

4-1. INTRODUCTION.

4-2. The procedures in this section test the instrument's electrical performance using the specifications of table 1-1 as the performance standards. All tests can be performed without access to the interior of the instrument.

4-3. EQUIPMENT REQUIRED.

4-4. Equipment required for the performance tests is listed in section I, table 1-4. Any equipment that satisfies the critical specifications given in the table may be substituted for the recommended models.

4-5. TEST RECORD.

4-6. Results of the performance test may be tabulated on the Performance Test Record at the end of this section. The test record lists the tested specifications and their acceptable limits. The results recorded at incoming inspection can be used for comparison in periodic maintenance, troubleshooting, and after repairs or adjustment.

4-7. CALIBRATION CYCLE.

4-8. Periodic performance verification is not normally required for this instrument. The performance checks should be made after service work has been performed or if improper operation is suspected.

4-9. Further checks that require access to the inside of the instrument are included in the adjustment section, but they are not required checks.

NOTE

The following Performance Tests are written for the standard instrument only. If optional attenuators have been installed, readjust all input signal levels accordingly.

PERFORMANCE TESTS

4-10. AMPLIFIER BANDWIDTH.

SPECIFICATION:
DC to 5 MHz (3 dB down at 5 MHz).

DESCRIPTION:
A function generator is used to provide the reference signal. A monitor oscilloscope is used to check for a constant signal at the display input connectors.

EQUIPMENT REQUIRED:
Function Generator
Monitor Oscilloscope

PROCEDURE:

a. Connect equipment as shown in figure 4-1.

b. Apply a 600 mV, 50 kHz sine wave from function generator to the X-INPUT.

c. Readjust the output of the function generator for exactly 12.7 cm (5 in.) of deflection.

d. Note the above signal level on the monitor oscilloscope.

e. Change signal frequency to 5 MHz and readjust output of function generator for the same signal level obtained in step d.

f. The amplitude measured on the display should be greater than 9.1 cm (3.6 in.).

For Y-amplifier bandwidth, apply the function generator output to the Y-INPUT and repeat steps b through f.

PERFORMANCE TESTS

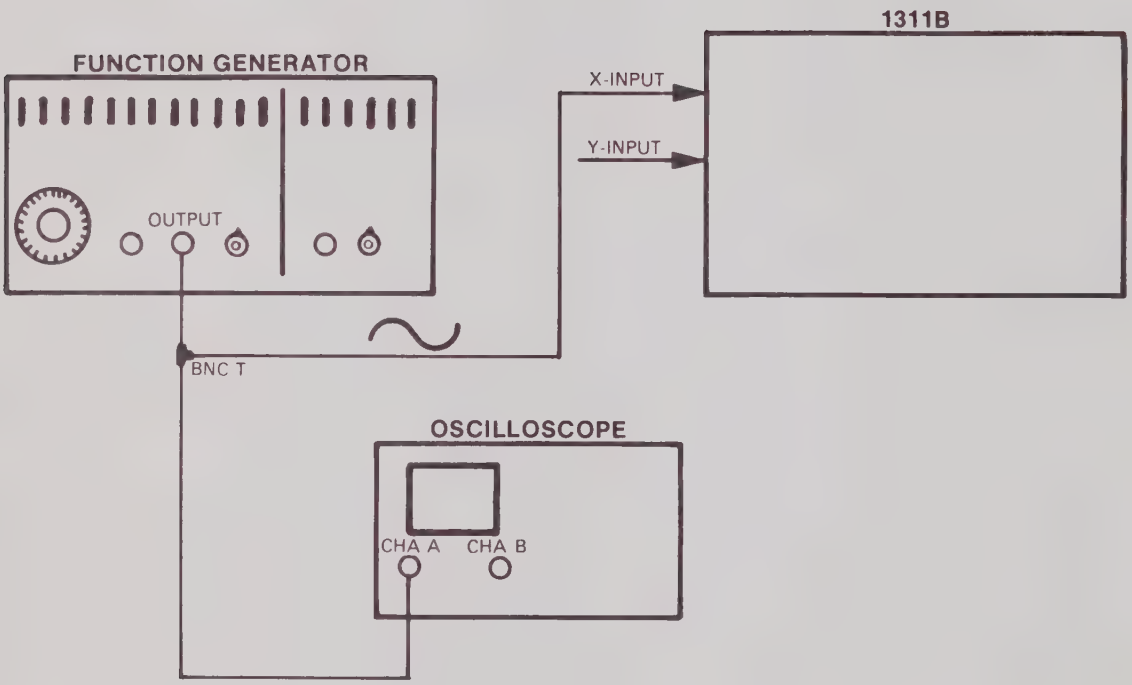

Figure 4-1. Amplifier Bandwidth Test Setup

PERFORMANCE TESTS

4-11. X-DEFLECTION FACTOR.

SPECIFICATION:
Gain must be variable from 35.8 mV/cm (90 mV/in.) to 60.9 mV/cm (153 mV/in.).

DESCRIPTION:
The X-GAIN control must vary the trace length from 16.4 cm (6.46 in.) to 27.9 cm (11 in.) with an input signal of 1 V.

EQUIPMENT REQUIRED:
Function Generator
Monitor Oscilloscope

PROCEDURE:
a. Connect equipment as shown in figure 4-2.

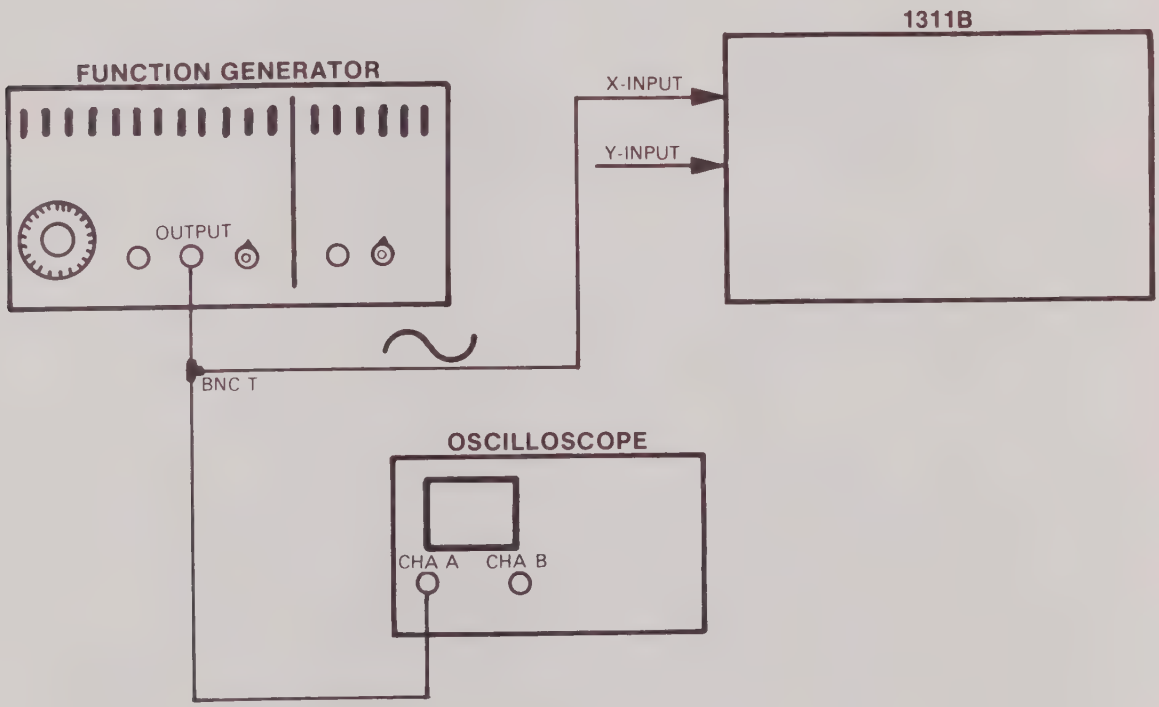

Figure 4-2. X-deflection Factor Test Setup

b. Adjust output of function generator for 1 V, 1 kHz sine wave (check function generator amplitide with monitor oscilloscope).

c. Turn front panel X-GAIN control fully ccw and check for a trace length of <16.4 cm (6.5 in.).

d. Rotate the X-GAIN control fully cw and check for a trace length of >27.9 cm (11 in.).

PERFORMANCE TESTS

4-12. Y-DEFLECTION FACTOR.

SPECIFICATION:
Gain must be variable from 46.3 mV/cm (118 mV/in.) to 81 mV/cm (207 mV/in.).

DESCRIPTION:
The gain control must vary the trace length from 12.2 cm (4.8 in.) to 21.6 cm (8.5 in.) with an input signal of 1 V.

EQUIPMENT REQUIRED:
Function Generator
Monitor Oscilloscope

PROCEDURE:
a. Connect equipment as shown in figure 4-3.

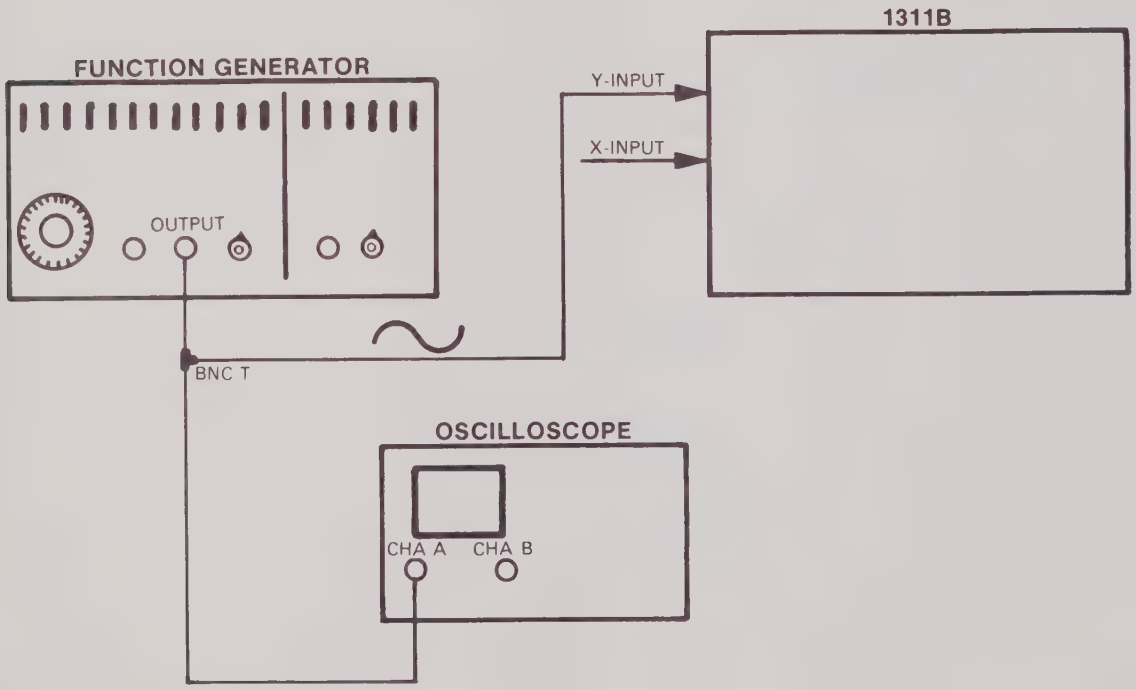

Figure 4-3. Y-deflection Factor Test Setup

b. Adjust function generator for a 1 V, 1 kHz sine wave (check function generator amplitude with monitor oscilloscope).

c. Turn front panel Y-GAIN control fully ccw and check for a trace length of <12.2 cm (4.8 in.).

d. Rotate the Y-GAIN control fully cw and check for a trace length of >21.6 cm (8.5 in.).

PERFORMANCE TESTS

4-13. REPEATABILITY.

SPECIFICATION:
<0.15% of full screen error in readdressing any point on screen from any other point on screen.

DESCRIPTION:
This test verifies amplifier performance stability with a varying input signal.

EQUIPMENT REQUIRED:
Pulse Generator

PROCEDURE:
a. Connect equipment as shown in figure 4-4.

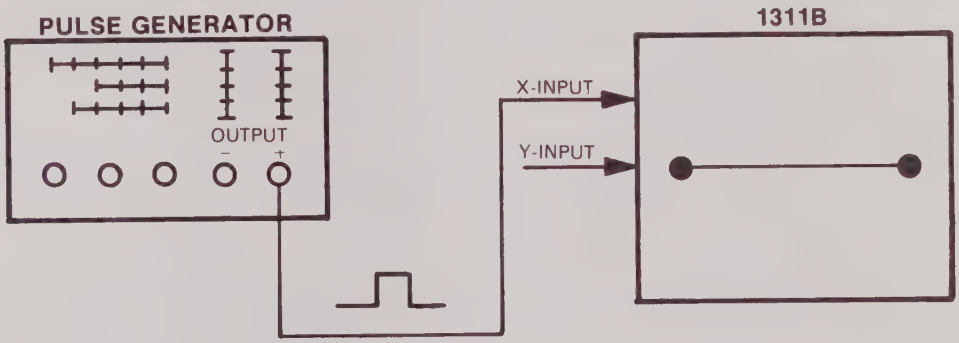

Figure 4-4. Repeatability Test Setup

b. Set frequency of pulse generator for a 10 kHz signal. Adjust display POSITION controls to bring trace on screen. Set pulse generator amplitude for full screen deflection. (See figure 4-4).

c. Vary the frequency of the pulse generator from 1 kHz to 100 kHz and notice the position change of the spot. Spot movement should be less than 1 spot diameter.

d. Disconnect function generator from X-INPUT and reconnect to Y-INPUT.

e. Repeat steps b and c for Y-deflection Amplifier.

PERFORMANCE TESTS

4-14. CROSSTALK.

SPECIFICATION:
<0.38 mm (0.015 in.) with one input terminated in 50Ω and the other input driven by 1 V, 500 kHz signal.

DESCRIPTION:
Crosstalk between deflection amplifiers is determined by measuring tracewidth when one input is terminated in 50Ω or a BNC shorting cap and a 1 V, 500 kHz is applied to the other input.

EQUIPMENT REQUIRED:
Function Generator.

PROCEDURE:
a. Connect equipment as shown in figure 4-5.

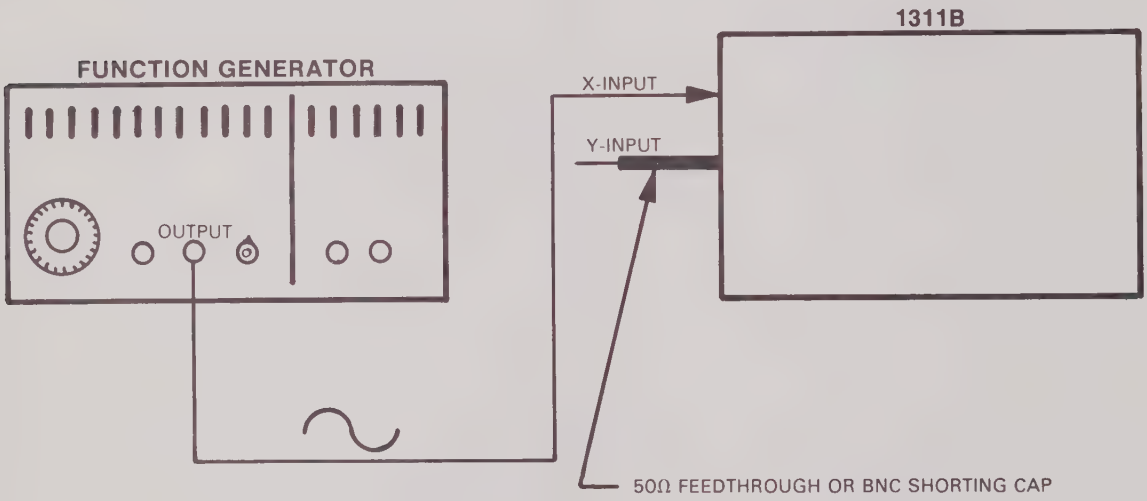

Figure 4-5. Cross Talk Test Setup

b. Apply a 1 V p-p, 500 kHz sine wave from function generator to X-INPUT.

c. Set front panel X and Y GAIN controls fully cw and check for no visible change in tracewidth.

d. Reverse connections to X and Y INPUT and repeat steps b and c.

PERFOMANCE TESTS

4-15. Z-AXIS BLANKING POLARITY.

SPECIFICATION:
-1 Vdc (INTENSITY at maximum) blanks trace. 1 Vdc (INTENSITY at minimum) provides maximum trace intensity.

DESCRIPTION:
With INTENSITY set to maximum, a -1 Vdc signal at the Z-INPUT shall blank the CRT. With INTENSITY set to minimum a +1 Vdc signal at the Z-INPUT provides maximum trace intensity.

EQUIPMENT REQUIRED:
Function Generator

PROCEDURE:
a. Connect equipment as shown in figure 4-6.

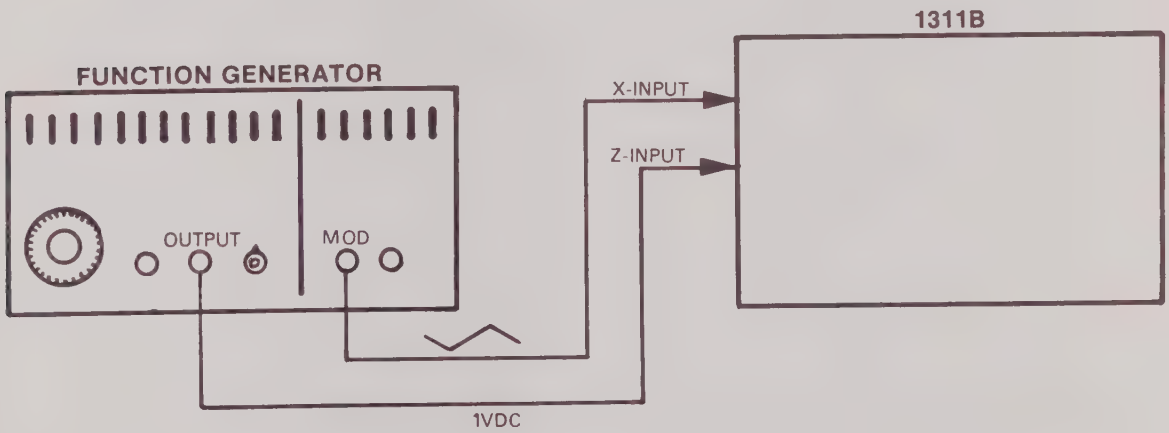

Figure 4-6. Z-axis Blanking Polarity Test Setup

b. Apply +1 Vdc to Z-INPUT and check for maximum trace intensity. INTENSITY control should have no effect on trace brightness.

c. Apply -1 Vdc to Z-INPUT and check for no trace on screen. INTENSITY control should not bring trace on screen.

PERFOMANCE TESTS

4-16. SETTLING TIME.

SPECIFICATION:
1 V Input <500 ns; 100 mV Input <200 ns.

DESCRIPTION:
The CRT beam, when moved from one position to another, must settle to within 1 spot diameter in less than 500 ns for a 1 V input and less than 200 ns for 100 mV input.

PROCEDURE:
a. Set Display INTENSITY Control fully ccw.

b. Connect equipment as shown in figure 4-7. Do not connect Z-INPUT at this time.

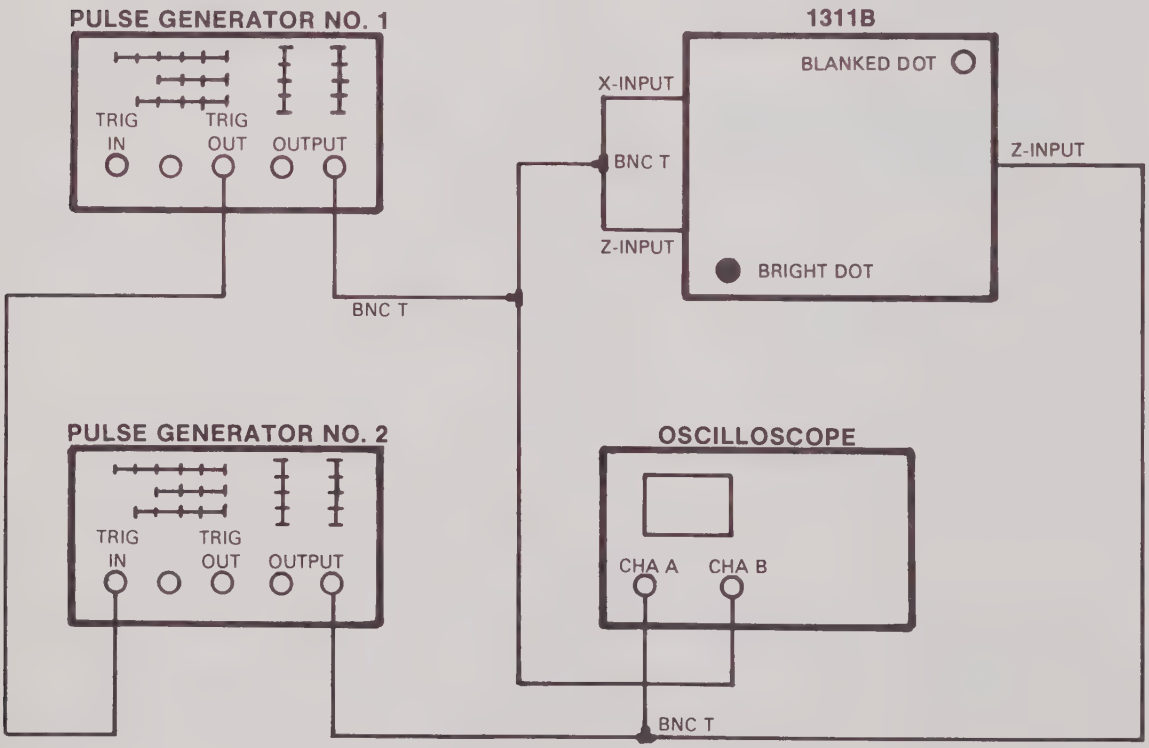

Figure 4-7. Settling Time Test Setup

c. Using the monitor oscilloscope adjust Pulse Generator No. 1 to 10 μs.

d. Adjust output amplitude of Pulse Generator No. 1 for 1 V.

e. Adjust Pulse Generator No. 2 for a pulse width of .2 μs at an amplitude of 1 V, using the monitor oscilloscope.

f. Connect Z-INPUT. Adjust Display INTENSITY to view one dot only. (See figure 4-7.)

g. Check monitor oscilloscope for the following display (figure 4-8).

PERFOMANCE TESTS

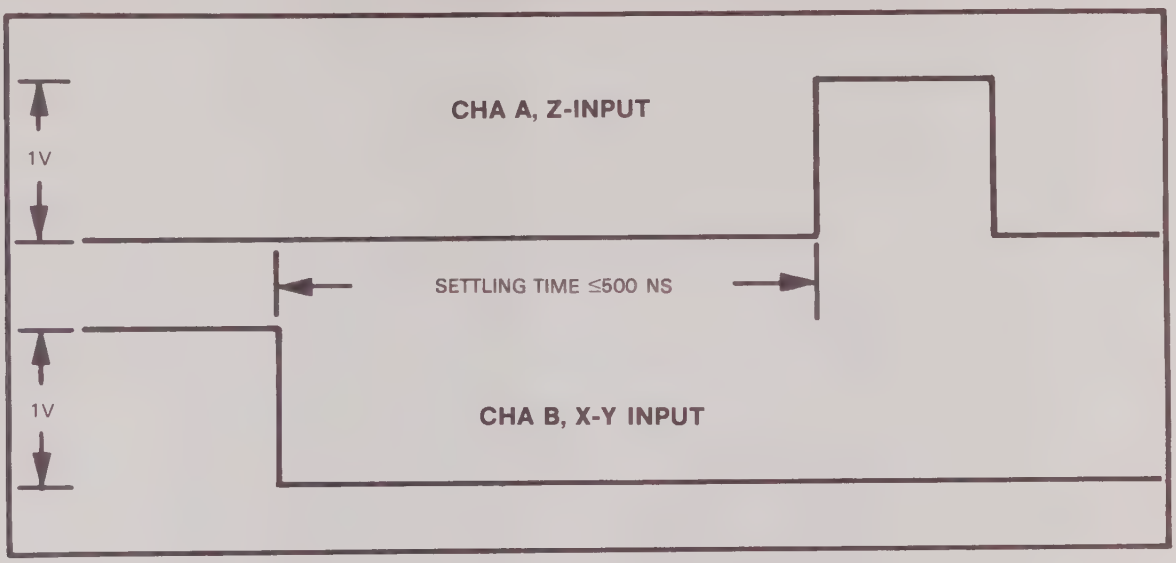

Figure 4-8. Settling Time Measurement with 1 V Input

h. Monitor the display and adjust the PULSE DELAY VERNIER on Pulse Generator No. 2 until a tail appears on the bright dot.

i. When the tail measures 1 dot diameter measure the time difference between the pulses displayed on the monitor oscilloscope. Time between pulses must not exceed 500 ns.

j. Adjust Pulse Generator No. 2 for an output signal of 100 mV.

k. Adjust PULSE DELAY VERNIER on Pulse Generator No. 1 ccw until tail appears on bright dot.

l. Readjust PULSE DELAY VERNIER on Pulse Generator No. 2 cw until tail just disappears.

m. The time difference measured between pulses on monitor oscilloscope must be less than 200 ns. (See figure 4-9.)

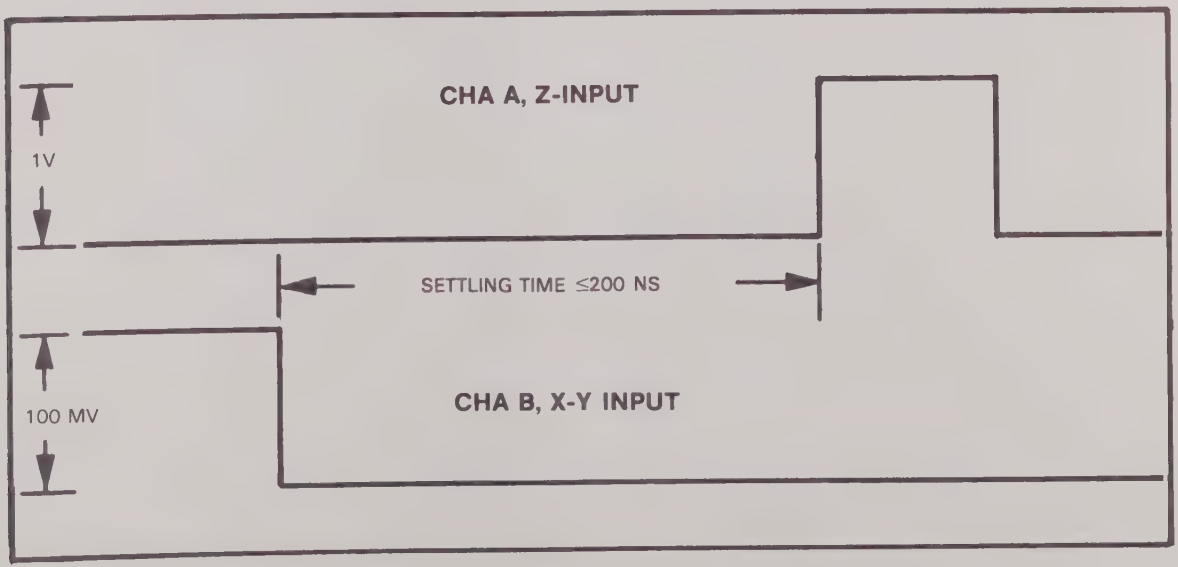

Figure 4-9. Settling Time Measurement with 100 mV Input

PERFORMANCE TEST RECORD

HEWLETT-PACKARD

MODEL 1311B

X-Y DISPLAY **Tested by** _____

SERIAL NO. _____ **Date** _____

Paragraph Number	Test	Min	Results Actual	Max
4-10	X- Y-bandwidth			
	X-bandwidth	≥9.1 cm (3.6 in.)	_____	
	Y-bandwidth	≥9.1 cm (3.6 in.)	_____	
	X- Y-deflection Factor			
4-11	X-deflection Factor	≤16.4 cm (6.5 in.)	_____	
4-12	Y-deflection Factor	≤12.2 cm (4.8 in.)	_____	
4-13	Repeatability			
	X-amplifier		_____	≤0.15%
	Y-amplifier		_____	≤0.15%
4-14	Crosstalk			
	X-amplifier to Y-amplifier		_____	≤0.38 mm (0.015 in.)
	Y-amplifier to X-amplifier		_____	≤0.38 mm (0.015 in.)
4-15	Z-axis Blanking Polarity			
	+1 Vdc (Max. Intensity)		_____	
	−1 Vdc (No Trace)		_____	
4-16	Settling Time			
	Large Signal (1.0 V)		_____	≤500 ms
	Small Signal (0.1 V)		_____	≤200 ms

SECTION V

ADJUSTMENTS

5-1. INTRODUCTION.

5-2. This section describes adjustments and checks required to return the instrument to peak operating capabilities when repairs have been made. Included in this section are equipment setups and adjustment procedures.

5-3. SAFETY REQUIREMENTS.

5-4. Although this instrument has been designed in accordance with international safety standards, general safety precautions must be observed during all phases of operation, service, and repair of the instrument. Failure to comply with the precautions listed in the Safety Summary at the front of this manual or with specific warnings given throughout this manual could result in serious injury or death. Service and adjustments should be performed only by qualified service personnel.

5-5. EQUIPMENT REQUIRED.

5-6. A complete list of required test equipment is given in Section I, table 1-4. Test equipment equivalent to that recommended may be substituted, provided it meets the required characteristics. For best results, use recently calibrated test equipment.

5-7. ADJUSTMENTS.

5-8. The adjustment procedures are arranged in a recommended sequence of adjustments. While most adjustments may be made independent of other adjustments, it is recommended that adjustments be made sequentially as a number of adjustments are directly related to preceeding or following adjustments.

5-9. For best results, allow the instrument to warm up for 15 minutes before making adjustments. Adjustment locations for the Low Voltage and High Voltage Power Supplies are shown in figure 5-4. Figures 5-6, 5-11, and 5-18, show adjustment locations for Z-axis amplifier, X-Y amplifiers, and focus and astigmatism amplifier respectively.

5-10. ADJUSTMENT PROCEDURES.

WARNING

ELECTRICAL SHOCK HAZARD

Use extreme caution when instrument covers are removed and power is applied. Voltages up to 24 kV are present around the CRT and HVPS areas and are capable of causing serious injury or death. Read the Safety Summary at the front of this manual before proceeding.

ADJUSTMENTS

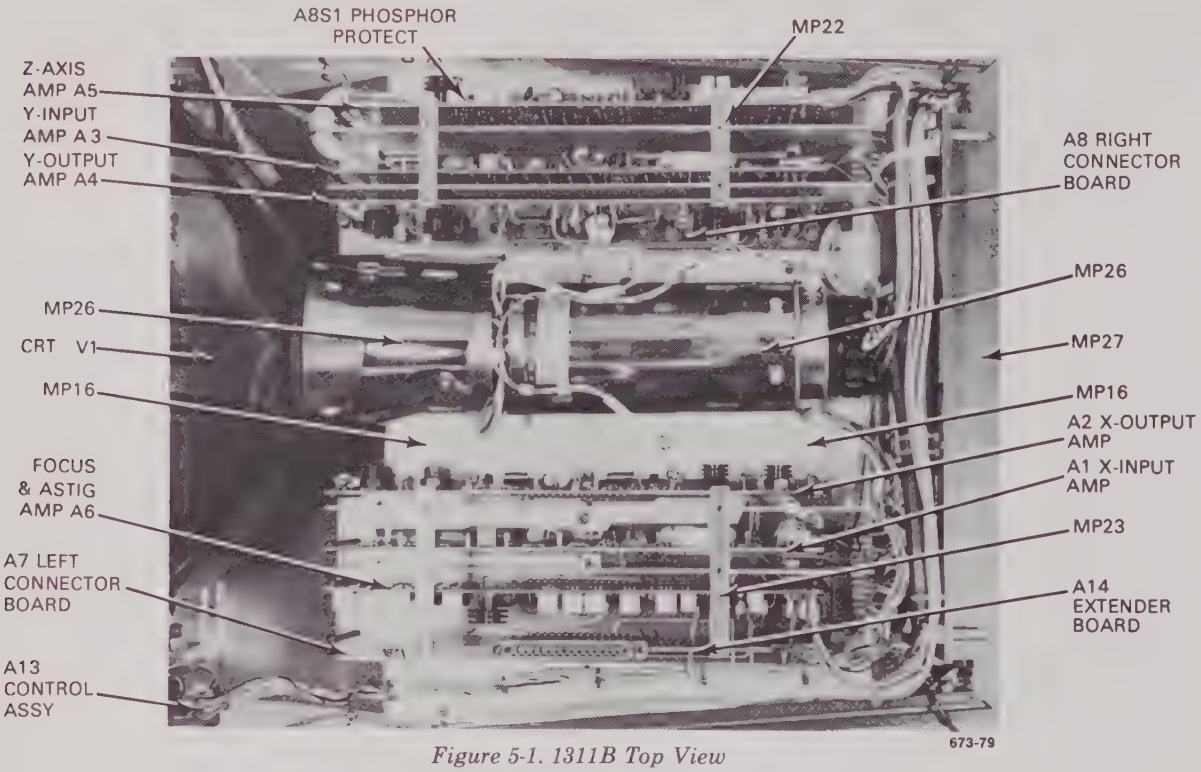

Figure 5-1. 1311B Top View

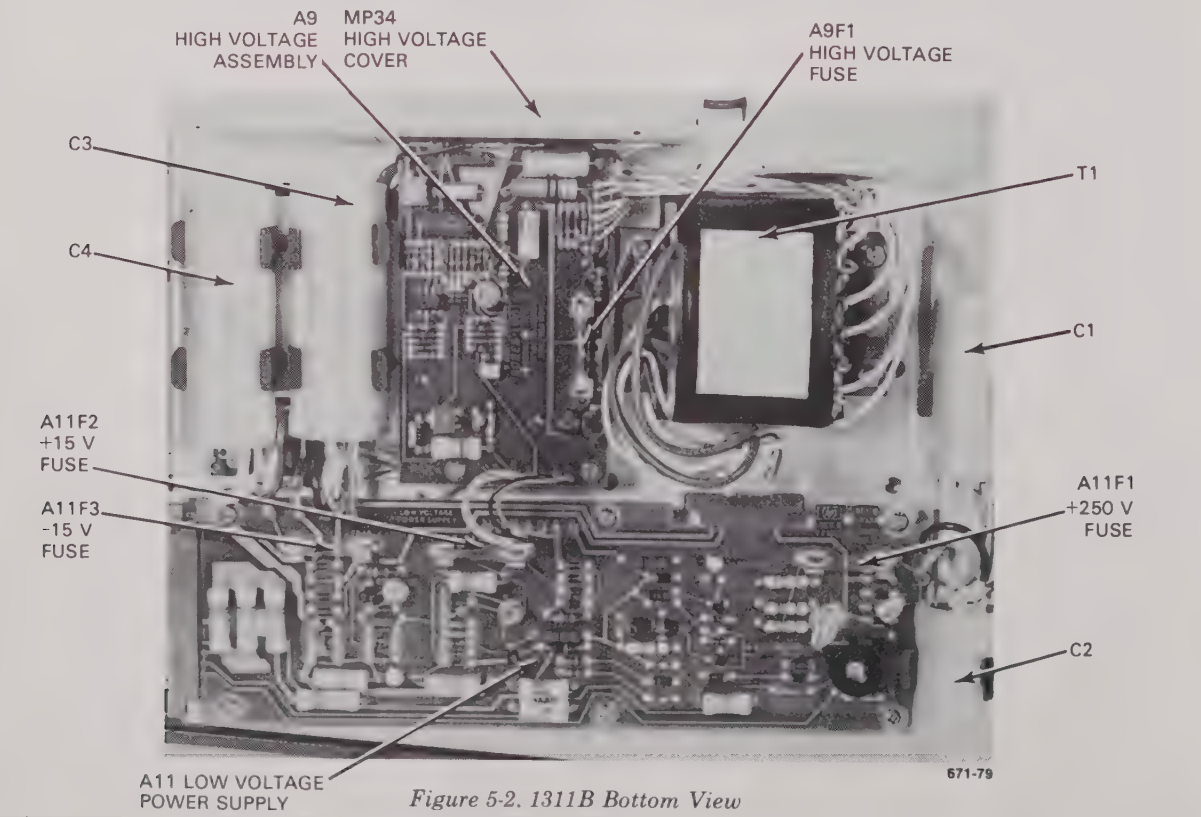

Figure 5-2. 1311B Bottom View

NOTE

The following Adjustment Procedures are written for the standard instrument only. If optional attenuators have been installed, readjust all input signal levels accordingly.

ADJUSTMENTS

5-11. LOW VOLTAGE POWER SUPPLY ADJUSTMENTS.

REFERENCE:
Service Sheet 8.

DESCRIPTION:
The +250 V and the -15 V are the adjustable power supplies. The +15 V supply is referenced to the -15 V supply. The +250 V supply is adjusted to within ±0.1 V. The -15 V supply is adjusted so that both +15 V and -15 V supplies are within ±0.1 V.

EQUIPMENT:
Digital Multimeter

PROCEDURE:

CAUTION

The +250 V supply is used as reference for the CRT cathode regulator circuit. Precise calibration of the +250 V supply is essential for proper reference of the cathode supply. If the +250 supply is not properly calibrated, the cathode voltage may exceed acceptable limits, and may cause activation of the HV shutdown circuit.

a. Connect digital voltmeter between red wire and chassis ground on the low voltage power supply board A11.

b. Adjust the +250 V supply (A11R12) for +250 V ±0.1 V.

c. Alternately connect the digital voltmeter to the violet and white/red wire on low voltage power supply board (A11) while adjusting the -15 V (A11R29) supply for equal error between the -15 V and +15 V supply. Final error on either supply must be $\leq$ ±0.1 V.

ADJUSTMENTS

5-12. HIGH VOLTAGE POWER SUPPLY.

NOTE

The following procedure need be performed only if repairs have been made to the high voltage power supply (A9) or if all of the high-voltage assembly has been replaced.

REFERENCE:
Service Sheet 7.

DESCRIPTION:
This procedure describes calibration of the high voltage shutdown circuit which ensures that the cathode voltage can never exceed –4750 V.

EQUIPMENT REQUIRED:
Digital Voltmeter
1000:1 Divider Probe

WARNING

Proper calibration of the high voltage shutdown circuit is necessary to prevent excessive cathode voltage being applied to the CRT. Cathode voltages in excess of –4750 V may result in x-ray emissions exceeding .5 mR/hr. Proper operation of the high voltage shutdown circuit ensures that x-ray emissions do not exceed .5 mR/hr under normal operating conditions, and under misadjustment and failure conditions. See Section VIII for Theory of Operation.

PROCEDURE:

a. Measure the +250 V power supply and ensure a reading of +250.1 V to 249.9 V. If necessary, readjust the +250 V power supply (see paragraph 5-11).

b. Check the accuracy of the 1000:1 Divider Probe by measuring the +250 V power supply using the digital voltmeter and the 1000:1 Divider Probe. Record the reading as V_{CAL}.

c. Measure the cathode voltage (4 wire on the A5 board) with the digital voltmeter and the 1000:1 Divider Probe. Record the reading as V_K.

d. Plot V_{CAL} and V_K on the Nomograph in figure 5-3. If V_{CAL} plots off the Nomograph, then the 1000:1 Divider Probe does not meet the required ±3% accuracy. If V_K or V_C plot off the Nomograph, then one or more of the following resistors must be out of tolerance: A9R3; A9R4; A9R24.

e. Temporarily connect resistor "R" (value obtained from figure 5-3) in parallel with A9R3 (750 KΩ). If the addition of resistor "R" triggers the high voltage shutdown circuit, (A9TP1 becomes positive and high voltage shuts down), remove "R" and proceed to the next test.

f. If the addition of resistor "R" does not trigger the high voltage shutdown circuit (A9TP1 remains negative), remove in sequence A9E1, A9E2, and A9E3 until A9TP1 becomes positive and high voltage shutdown occurs. Leave out the required jumper (A9E1, A9E2, A9E3) when high voltage shutdown has been achieved. Complete the adjustment by removing resistor "R".

g. If high voltage shutdown can not be accomplished check the tolerance of the following components:

A9VR3 - should be 5.11 V ±2% (5.01 V to 5.21 V)
A9R21 - should be 38.3k ±1% (37.917k to 38.683k)
A9R22 - should be 274 KΩ ±10% (301.4k to 246.6k)
A9R24 - should be 30 MΩ ±1% (29.7 MΩ to 30.3 MΩ).

ADJUSTMENTS

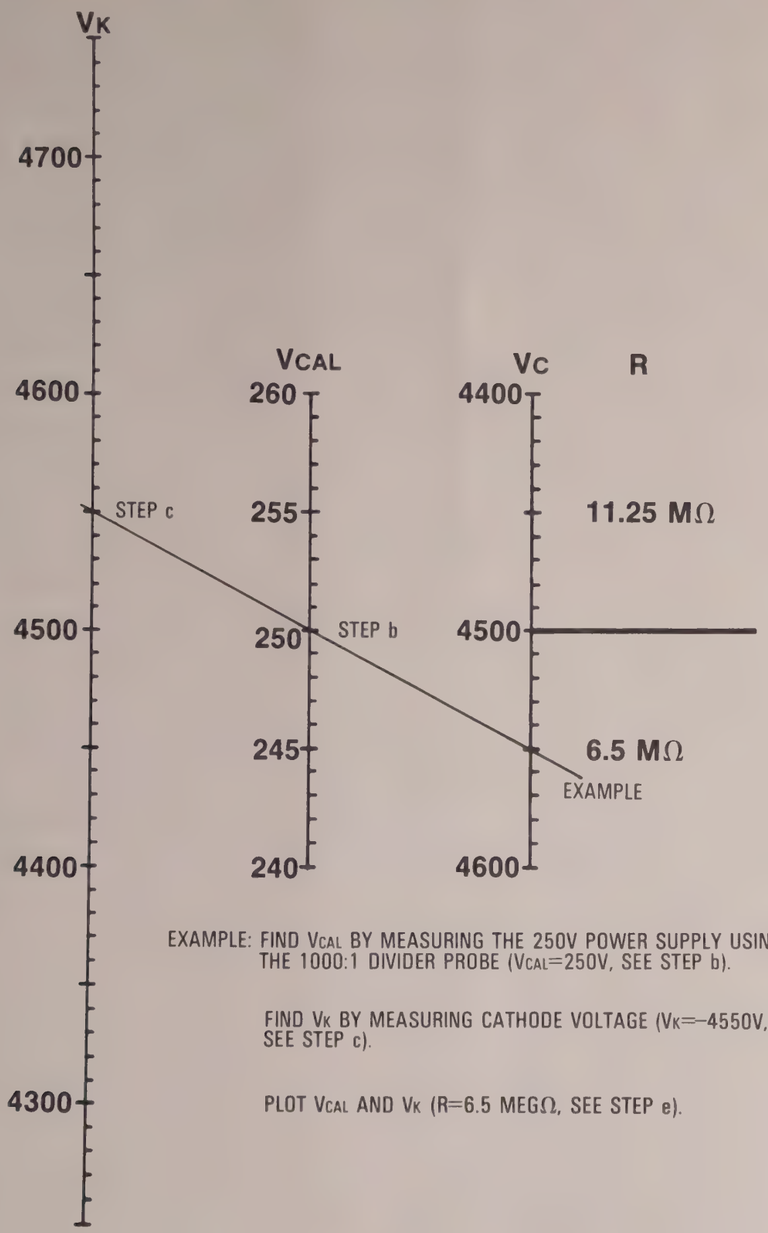

Figure 5-3. High Voltage Shutdown Circuit Nomograph

ADJUSTMENTS

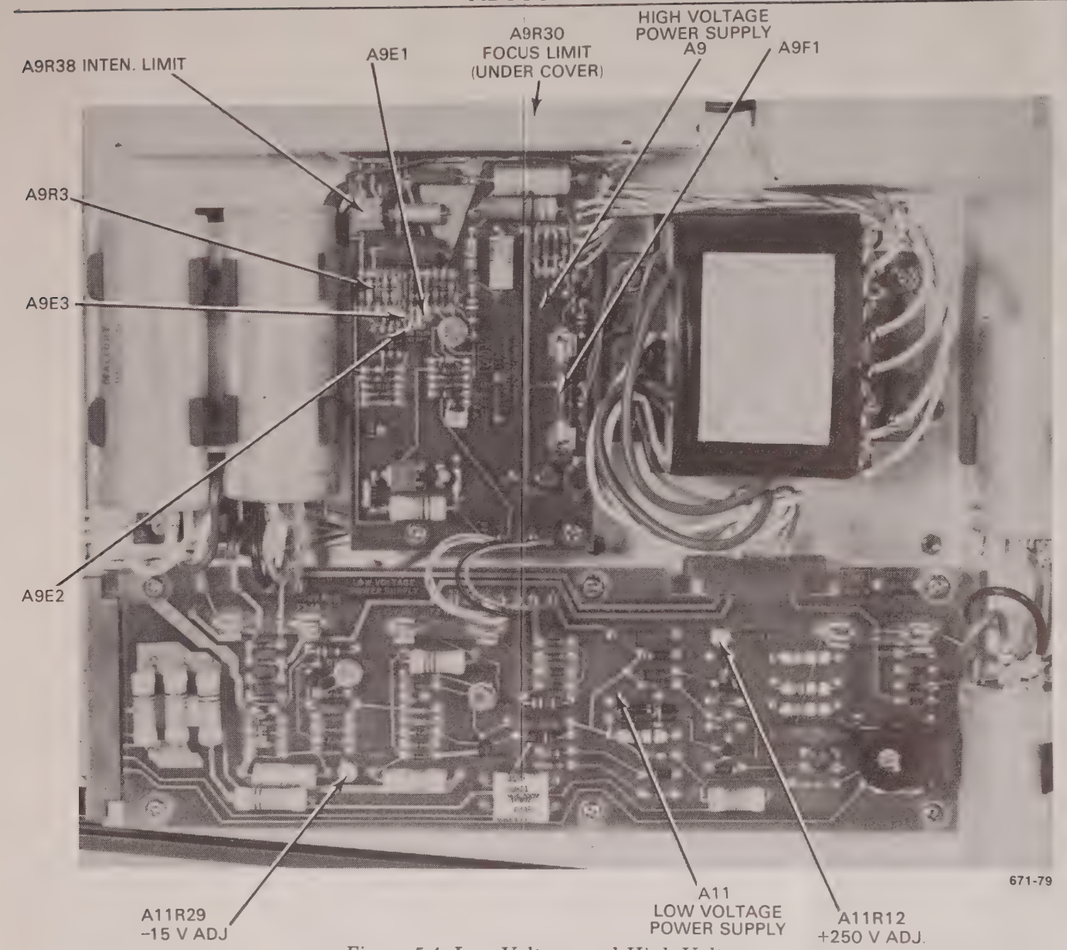

Figure 5-4. Low Voltage and High Voltage Power Supply Adjustment Locations

Table 5-1. Low Voltage and High Voltage Power Supply Adjustments

Reference Designator	Adjustment Name	Adjustment Paragraph	Service Sheet	Description
A11R12	+250 V SUPPLY	5-11	8	Adjust supply for 250 V ±0.1 V
A11R29	–15 V SUPPLY	5-11	8	Adjust –15 V and +15 V Supply for equal error not exceeding ±.1 V
A9E1 A9E2 A9E3	HIGH VOLTAGE SHUTDOWN	5-12	7	Check for high voltage shutdown below –4750 V

5-13. Z-AXIS BALANCE ADJUSTMENTS.

REFERENCE:
Service Sheet 4.

DESCRIPTION:
The Z-axis amplifier balance (A5R13) is adjusted so that there is a 3 V increase in Z-axis amplifier output as the front panel INTENSITY control is rotated from minimum to maximum.

EQUIPMENT:
Digital Voltmeter

PROCEDURE:

a. Remove power and turn off phosphor protect switch (A8S1).

b. Disable high voltage oscillator by removing A9F1.

c. Preset all adjustments on the Z-axis board (A5) to midrange and the front-panel INTENSITY control fully CCW.

d. Apply power to the display.

e. Adjust Z-axis offset (A5R19) for approximately 20 V at the Z-axis output (A5TP1).

f. Monitor the Z-axis output (A5TP1) with the digital voltmeter and rotate the front panel INTENSITY control to minimum (fully ccw).

g. Adjust the Z-axis balance (A5R13) such that a 3 V increase is noted at the Z-axis output (A5TP1) as the front panel INTENSITY control is rotated from minimum to maximum.

NOTE

The amplifier offset will change when the balance is adjusted. After each balance adjustment recheck the Z-axis output voltage change by varying the front panel INTENSITY from minimum to maximum setting.

5-14. Z-AXIS GAIN, OFFSET, AND INTENSITY LIMIT ADJUSTMENTS.

REFERENCE:
Service Sheet 4.

DESCRIPTION:
The intensity limit and offset adjustments provide proper CRT grid bias as defined by the CRT cutoff voltage. The gain adjustment provides the proper CRT grid drive as defined by the CRT cutoff voltage.

EQUIPMENT:
Monitor Oscilloscope
Pulse Generator
Digital Voltmeter
Low Capacitance 50:1 Divider Probe

PROCEDURE:

a. Readjust Z-axis offset (A5R19) for 20 V at the Z-axis output (A5TP1).

b. Set intensity limit (A9R38) for maximum voltage at A9C21.

c. Turn off power and enable high voltage oscillator by replacing A9F1.

d. Apply power and adjust intensity limit (A9R38) for a dimly visable dot on the screen.

e. Record the voltage at A9C21 and the Z-axis output (A5TP1). The difference between the two voltages is the CRT cutoff voltage.

$$\text{CRT cutoff voltage} = V_{at\ A9C21} - V_{at\ A5TP1}$$

f. Position the beam off-screen and apply a 10 kHz +1 V, 1 microsecond wide (1% duty cycle) pulse to the Z-INPUT.

g. Set front panel INTENSITY control (A13R1) fully cw and monitor the Z-axis output (A5TP1) with the monitor oscilloscope (use 50:1 divider probe).

h. Adjust the Z-axis gain (A5R14) and Z-axis offset (A5R19) for a peak-to-peak amplitude signal equal to 75% of the CRT cutoff voltage or 47 V, whichever is less (see step e for CRT cutoff voltage).

i. Adjust Z-axis offset (A5R19) such that the positive position of the pulse is just equal to the maximum Z-axis output, maintaining the same peak-to-peak amplitude obtained in step h (see figure 5-5).

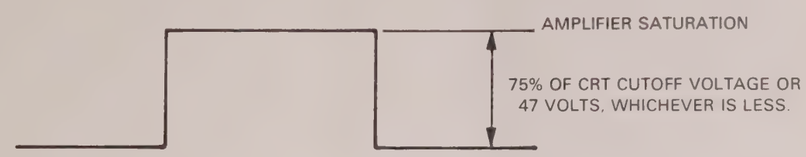

Figure 5-5. Z-axis Gain and Offset Adjustment

j. Apply 10 kHz, a 1 V p-p, 1 microsecond wide (1% duty cycle) pulse having a -1 V base line to the Z-axis INPUT. Position the beam on-screen and rotate the front panel INTENSITY control to minimum. Adjust the intensity limit (A9R38) for a visible, low intensity dot on the screen. Rotation of the front panel INTENSITY control towards maximum, or removal of the Z-axis input signal should produce a brighter dot. If not, recheck gain, offset, and balance adjustments.

5-15. Z-AXIS PULSE RESPONSE.

REFERENCE:
Service Sheet 4

DESCRIPTION:
The high frequency response adjustments (A5C27, A5R36) trim the Z-axis amplifier pulse response for a fast rise time consistent with minimum overshoot (rise time = ⩽25 microseconds, overshoot typically is ⩽5%).

EQUIPMENT:
Monitor Oscilloscope
Pulse Generator
Low Capacitance 50:1 Divider Probe

PROCEDURE:

a. Position beam off-screen and apply 10 kHz, a +1 V, 1 microsecond wide (1% duty cycle) pulse to the Z-axis INPUT.

b. Set front panel INTENSITY CCW.

c. Connect the monitor oscilloscope to the Z-axis output (A5TP1). Use the 50:1 divider probe.

d. Monitor the oscilloscope and adjust HF1 (A5C27) and HF2 (A5R36) to obtain a pulse of ⩽25 nanosecond rise time with minimum perturbations (±5% typical).

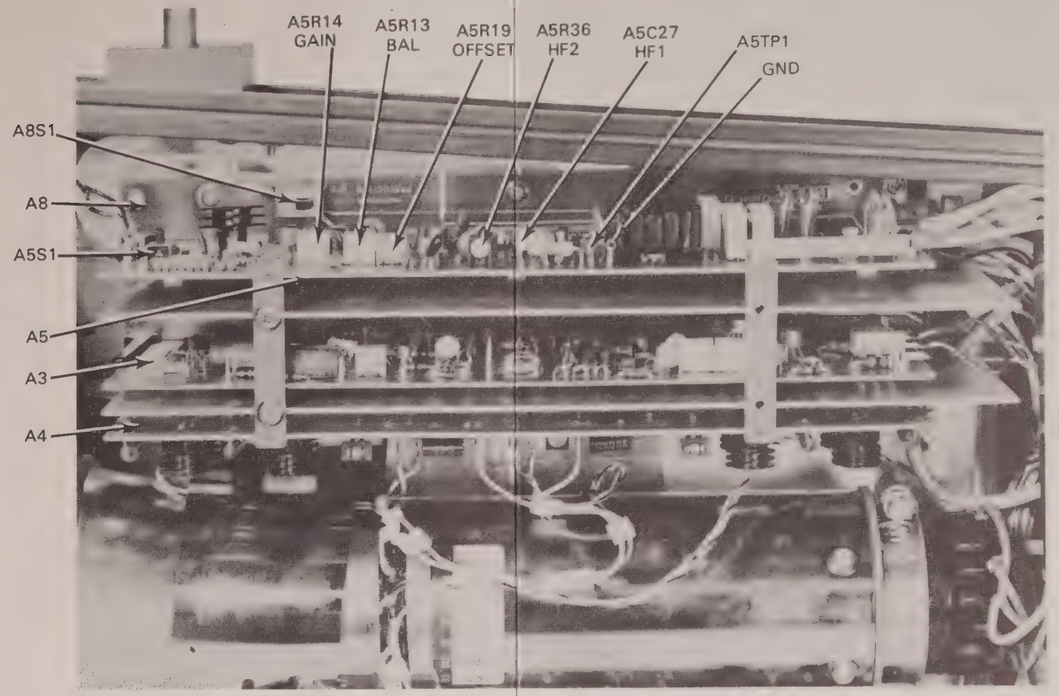

Figure 5-6. Z-axis Amplifier Adjustment Locations

Table 5-2. Z-axis Amplifier Adjustments

Reference Designator	Adjustment Name	Adjustment Paragraph	Service Sheet	Description
A5R19	Z-AXIS OFFSET	5-13	4	Adjust Z-OFFSET for 20 V output at Z-AXIS output (A5TP1)
A5R13	Z-AXIS BALANCE	5-13	4	Adjust for 3 V increase at Z-AXIS output when intensity control is turned from minimum to maximum
A9R38	INTENSITY LIMIT	5-14	7	Adjust for dimly visible dot on screen with INTENSITY at minimum and 1 V p-p at Z-AXIS input
A5R14	Z-AXIS GAIN	5-14	4	Adjust to 75% of CRT cutoff or +47 V whichever is less (monitor at A5TP1)
A5R19	Z-AXIS OFFSET	5-14	4	Adjust so that positive portion of pulse is equal to maximum Z-AXIS output (monitor at A5TP1)
A5C27 A5R36	Z-AXIS HF1 Z-AXIS HF2	5-15	4	Adjust for pulse rise time of ⩽25 ms

ADJUSTMENTS

5-16. X-AMPLIFIER GAIN ADJUSTMENT.

REFERENCE:
Service Sheet 2.

DESCRIPTION:
The X amplifier gain is adjusted so that the front-panel X-GAIN control has a range of .9 V to 1.6 V (1.75:1 ratio).

EQUIPMENT:

Function Generator
Monitor Oscilloscope

PROCEDURE:

a. Connect equipment as shown in figure 5-7.

b. Set front-panel X-Gain control fully clockwise.

c. Set function generator output as follows:

FREQUENCY	1 kHz
FUNCTION	Sine Wave
AMPLITUDE	.9 V p-p as monitored on oscilloscope

d. Adjust X amplifier gain A1R12 for 26 cm (10.25 in.) of deflection.

e. Increase output of function generator to 1.6 V p-p.

f. Set front-panel X-GAIN fully counterclockwise and check for ≤25.4 cm (10 in.) of deflection.

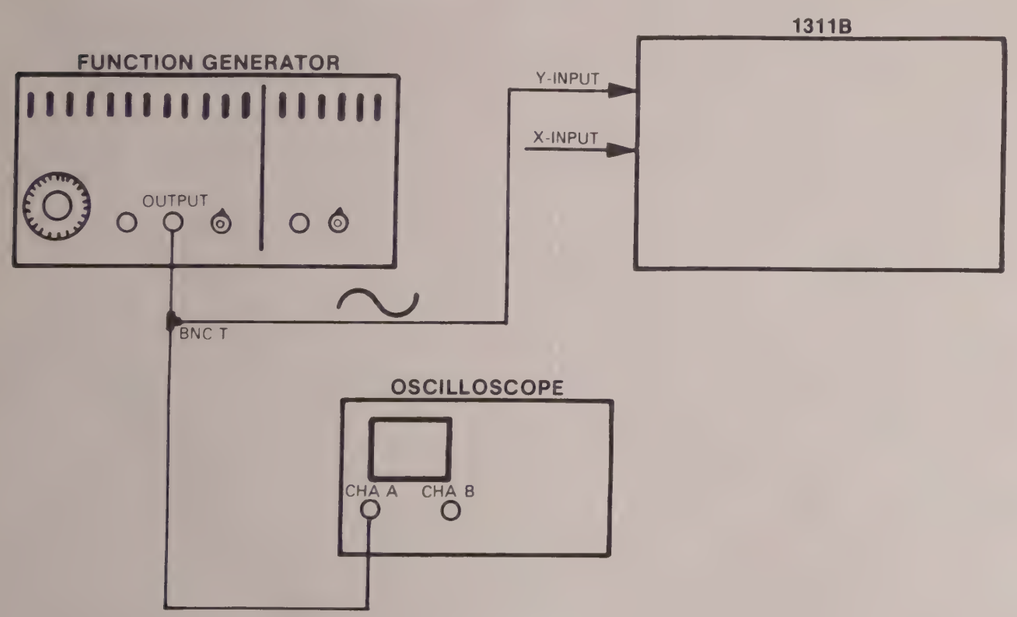

Figure 5-7. Gain-set Adjustment Test Setup

ADJUSTMENTS

5-17. Y-AMPLIFIER GAIN ADJUSTMENT.

REFERENCE:
Service Sheet 2.

DESCRIPTION:
The Y-amplifier gain is adjusted so that the front panel Y-GAIN has a range of .9 V to 1.6 V (1.75:1 ratio).

EQUIPMENT:

Function Generator
Monitor Oscilloscope

PROCEDURE:

a. Connect equipment as shown in figure 5-7.

b. Set front-panel Y-Gain control fully clockwise.

c. Set function generator output as follows:

FREQUENCY	1 kHz
FUNCTION	Sine Wave
AMPLITUDE	.9 V p-p as monitored on oscilloscope

d. Adjust Y-Amplifier gain A3R12 for 22.2 cm (8.75 in.).

e. Increase output of function generator to 1.6 V p-p.

f. Set front-panel Y-GAIN fully counterclockwise and check for ≤21.6 cm (8.5 in.) of deflection.

5-18. X-AMPLIFIER DC BALANCE ADJUSTMENT.

REFERENCE:
Service Sheet 2.

DESCRIPTION:
The X-amplifier average and balance adjustments (A1R64, A1R11) are set to minimize dc shift when the front panel X-GAIN control is rotated throughout its range.

EQUIPMENT:
Digital Voltmeter

PROCEDURE:

a. Remove ground strap from digital voltmeter and connect voltmeter leads differentially to the horizontal deflection plates (9 and 5 wires on X output amplifier, A2).

b. Set front panel X-POSITION control for a 0 V reading on digital voltmeter.

c. Disconnect digital voltmeter common lead and connect it to chassis ground.

d. Set average adjustment (A1R64) for a reading of +108 V on digital voltmeter.

e. Turn front panel X-GAIN control back and forth between its cw and ccw position while observing spot on display. Set balance adjustment (A1R11) to minimize movement of spot. Spot movement shall not exceed 0.8 cm (0.3 in.).

5-19. Y-AMPLIFIER DC BALANCE ADJUSTMENT.

REFERENCE:
Service Sheet 2.

DESCRIPTION:
The Y-amplifier average and balance adjustments (A3R64, A3R11) are set to minimize dc shift when the front panel Y-GAIN control is rotated throughout its range.

EQUIPMENT:
Digital Voltmeter

PROCEDURE:

a. Remove ground strap from digital voltmeter and connect voltmeter leads differentially to the vertical deflection plates (9 and 5 wires on Y-output amplifier, A4).

b. Set front panel Y-POSITION control for a 0 V reading on digital voltmeter.

c. Disconnect digital voltmeter common lead and connect it to chassis ground.

d. Set average adjustment (A3R64) for a reading of +108 V on digital voltmeter.

e. Turn front panel X-GAIN control back and forth between its cw and ccw position while observing spot on display. Set balance adjustment (A3R11) to minimize movement of spot. Spot movement shall not exceed 0.8 cm (0.3 in.).

5-20. X-AMPLIFIER PULSE RESPONSE AND BANDWIDTH ADJUSTMENTS.

REFERENCE:
Service Sheet 3.

DESCRIPTION:
The X-amplifier response adjustments are set for an amplifier rise time of ⩽75 nanoseconds at minimum overshoot and a bandwidth of 5 mHz.

EQUIPMENT:
Pulse Generator
Monitor Oscilloscope
Function Generator

PROCEDURE:
a. Set 50Ω/10 KΩ input impedance switch (A1S1) to 50Ω.

b. Connect equipment as shown in figure 5-8.

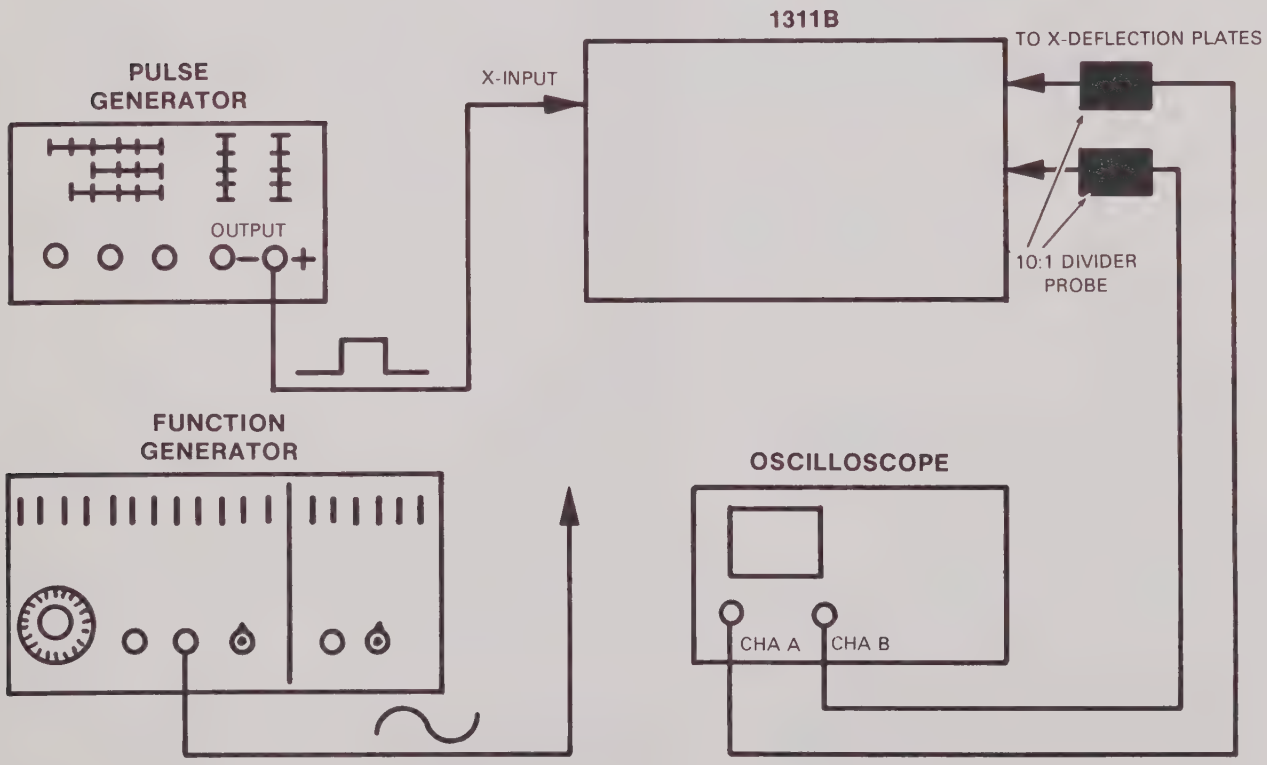

Figure 5-8. X-amplifier Pulse Response and Bandwidth Adjustment Setup

c. Set pulse generator controls as follows:

PULSE PERIOD ..... ≅ 10 microsecond
PULSE WIDTH ..... 50% duty cycle
AMPLITUDE ..... full screen deflection

ADJUSTMENTS

d. Connect oscilloscope to the Y-deflection plates (9 and 5 wires on Y-output amplifier, A4), and set oscilloscope controls as follows:

DISPLAY ..... A+B
TIME/DIV ..... 10 microseconds
CHANNEL INPUT ATTENUATORS ..... 1 V/DIV
CHAN B ..... invert

e. Set LF ADJ No. 1 (A4R24) and LF ADJ No. 2 (A4C17) for flattest pulse response as indicated in figure 5-11.

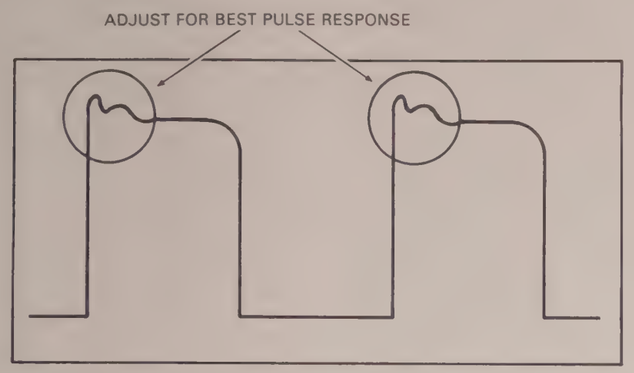

Figure 5-11. Y-amplifier Pulse Response Adjustment

f. Measure rise time of the pulse between the 10% and 90% points as displayed on the oscilloscope. Rise time must be ≤75 nanoseconds.

g. Disconnect pulse generator from Y-INPUT and connect the function generator.

h. Apply a 50 kHz sine wave from function generator to the Y-INPUT. Set output amplitude of function generator to cause 12.7 cm (5 in.) of deflection on the CRT.

i. Change frequency of function generator to 5 MHz.

j. Adjust HF ADJ No. 1 (A4C28) and HF ADJ No. 2 (A4C12) for 9.4 cm (3.6 in.) of vertical deflection.

k. Repeat steps e through j until amplifier rise time and bandwidth are within specified limits.

ADJUSTMENTS

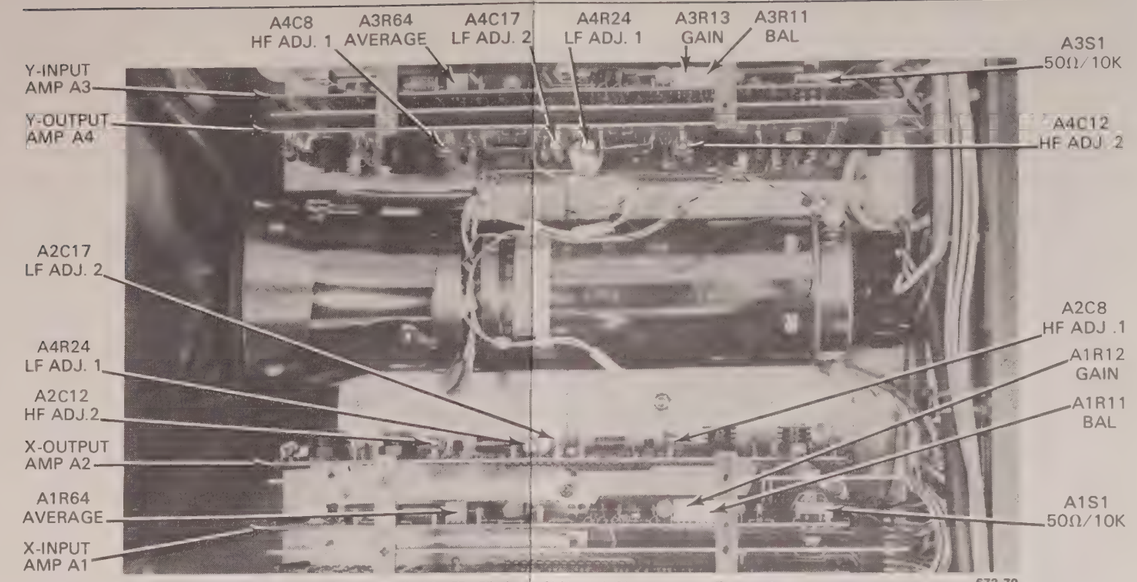

Figure 5-12. X- Y-Amplifier Adjustment Locations

Table 5-3. X- Y-Amplifier Adjustments

Reference Designator	Adjustment Name	Adjustment Paragraph	Service Sheet	Description
A1R12	X-GAIN	5-16	2	Adjust so that front panel X-GAIN provides .9 V to 1.6 V adjustment range.
A1R11	X-BALANCE	5-18	2	Adjust to minimize movement of display when X-GAIN is moved from minimum to maximum
A2R24; A2C17	LF NO. 1; LF NO. 2	5-20	3	Adjust for flattest pulse response at 75 ms
A2C28; A2C12	HF NO. 1; HF NO. 2	5-20	3	Adjust for bandwidth of 5 MHz
A3R12	Y-GAIN	5-17	2	Adjust so that front panel Y-GAIN provides .9 V to 1.6 V adjustment range.
A3R11	Y-BALANCE	5-19	2	Adjust to minimize movement of display when Y-GAIN is moved from minimum to maximum
A4C17; A4R24	LF NO. 1; LV NO. 2	5-21	3	Adjust for flattest pulse response at 75 ms
A4C28; A4C12	HF NO. 1; HF NO. 2	5-21	3	Adjust for bandwidth of 5 MHz

5-22. TRACE-ALIGN AND ORTHO ADJUSTMENT.

REFERENCE:
Service Sheet 7.

DESCRIPTION:
The trace is electrically aligned horizontally and vertically with the sides of the 1311B.

EQUIPMENT:
Function Generator

PROCEDURE:

a. Apply a 1 V p-p, 1 kHz Sine Wave from function generator to the X-INPUT.

b. Set TRACE ALIGN to cause trace to lie parallel to the top or bottom of the cabinet.

c. Disconnect function generator from X-INPUT and connect to Y-INPUT.

d. Set ORTHOG to cause the trace to lie parallel to the cabinet sides.

5-23. DYNAMIC FOCUS AND ASTIGMATISM ADJUSTMENT.

REFERENCE:
Service Sheets 5 and 6.

DESCRIPTION:
The following procedure describes the dynamic focus and astigmatism adjustments using the HP Model 1350A Graphics Translator and the HP Model 9825A, HP-IB Controller.

EQUIPMENT:
9825A HP-IB Controller, equipped with 98210A String Advanced Program ROM;
98214 Extended I/O ROM;
98034A HP-IB Interface;
1350A Graphics Translator;
Monitor Oscilloscope.

PROCEDURE:

a. Set up test equipment as shown in figure 5-13.

ADJUSTMENTS

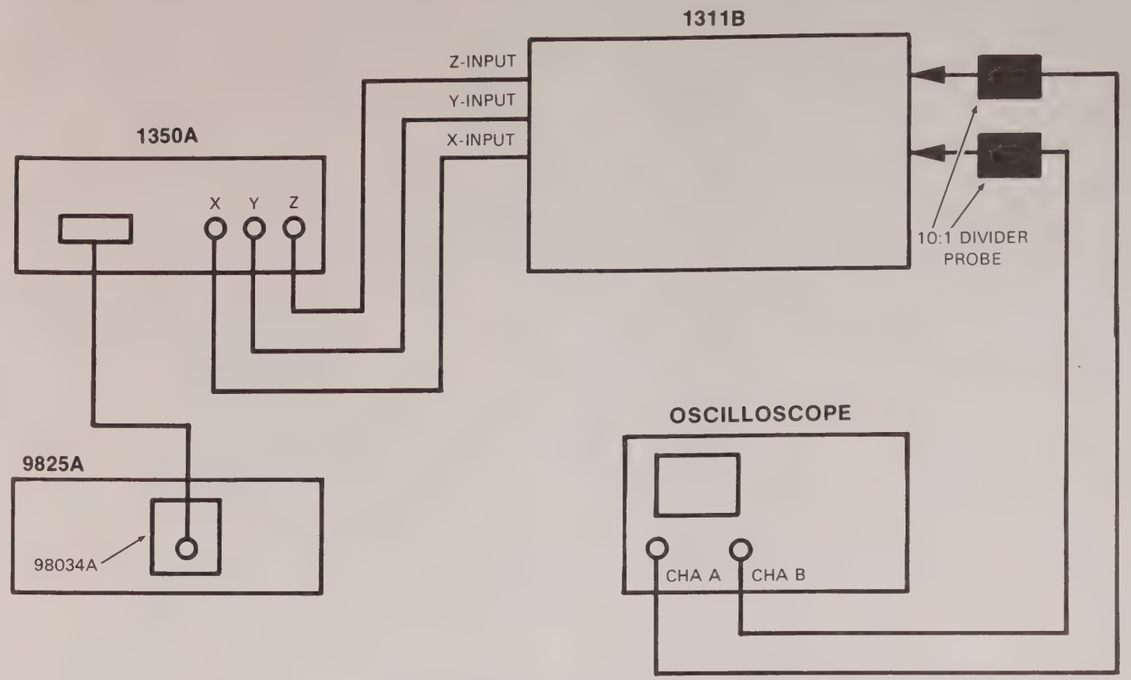

NOTE. CONNECT CHANNEL A DIVIDER PROBE TO JUNCTION OF A6Q25 AND A6R111.
CONNECT CHANNEL B DIVIDER PROBE TO JUNCTION OF A6Q21 and A6R96.

Figure 5-13. Dynamic Focus and Astigmatism Test Setup

NOTE

If Option 003 is installed, set front panel INTENSITY control for a dimly viewable spot before connecting the X-Y-Z-INPUTS. Leave INTENSITY setting for the remainder of this adjustment procedure.

b. Set X- Y- Z-amplifier input impedance switches (A1S1, A3S1, A5S1) to 50Ω.

c. Preset all adjustments on the focus and astigmatism board (A6) to center range.

d. Preset focus gain adjustment (A6R43) fully ccw.

e. Center the front panel FOCUS and ASTIGMATISM controls.

f. Load program* listed in table 5-4 into the 1350A Graphics Translator using the 9825A Controller.

*The program is available on cassette tape. Order HP Part No. 5010-0905.

5-13. Z-AXIS GAIN, OFFSET, AND INTENSITY LIMIT ADJUSTMENTS. STD CONFIGURATION.

REFERENCE:
Service Sheet 4.

DESCRIPTION:
The intensity limit and offset adjustments provide proper CRT grid bias as defined by the CRT cutoff voltage. The gain adjustment provides the proper CRT grid drive as defined by the CRT cutoff voltage.

EQUIPMENT:
Monitor Oscilloscope
Pulse Generator
Digital Voltmeter
Low Capacitance 50:1 Divider Probe

PROCEDURE:

a. Preset Z-axis OFFSET (A5R21), G BAL (A5R16), BAL (A5R19), and G CAL (A5R17) to their midrange positions. Preset front panel Intensity control fully counterclockwise.

b. Set Z-axis input impedance select switch (A5S1) to the 50 ohm position.

c. Record the voltage at A9C21 and the Z-axis output (A5TPZ), when the spot is just extinguished. Either Intensity Limit (A8R38) or Z-axis OFFSET (A5R21) may be adjusted to obtain this. The difference in these two voltages is the CRT cutoff voltage.

$$V_{CUTOFF} = V_{A9C211} - V_{A5TPZ}$$

d. Adjust Intensity limit (A9R38) for a voltage at A9C21 of 70 volts + (.2) (V_{CUTOFF}).

e. Adjust Z-axis OFFSET (A5R21) for a voltage at A5TPZ of $V_{A9C21} - V_{CUTOFF}$. The beam should be extinguished. If the voltage at A5TPZ is less than 20 volts, then set V_{A5TPZ} to 20 volts and adjust Intensity Limit (A9R38) for 20 volts + V_{CUTOFF} at A9C21.

f. Allow the display to warm-up for 30 minutes **with** the covers installed.

g. Adjust BAL (A5R19) for 3 volts **positive** shift in DC voltage A5TPZ when the front panel Intensity control is rotated from fully counterclockwise to fully clockwise.

h. Position the beam off-screen and apply a 10 kHz +1 V, 1 microsecond wide (1% duty cycle) pulse to the Z-INPUT.

i. Set front panel INTENSITY control (A13R1) fully cw and monitor the Z-axis output (A5TPZ) with the monitor oscilloscope (use 50:1 divider probe).

j. Adjust the Z-axis gain (A5R17) and Z-axis offset (A5R21) for a peak-to-peak amplitude signal equal to 75% of the CRT cutoff voltage or 47 V, whichever is less (see step c for CRT cutoff voltage).

k. Adjust Z-axis offset (A5R21) such that the positive position of the pulse is just equal to the maximum Z-axis output, maintaining the same peak-to-peak amplitude obtained in step h (see figure 5-5).

Figure 5-5. Z-axis Gain and Offset Adjustment

l. Apply 10 kHz, a 1 V p-p, 1 microsecond wide (1% duty cycle) pulse having a –1 V base line to the Z-axis INPUT. Position the beam on-screen and rotate the front panel INTENSITY control to minimum. Adjust the intensity limit (A9R38) for a visible, low intensity dot on the screen. Rotation of the front panel INTENSITY control towards maximum, or removal of the Z-axis input signal should produce a brighter dot. If not, recheck gain, offset, and balance adjustments.

5-14. Z-AXIS PULSE RESPONSE.

REFERENCE:
Service Sheet 4.

DESCRIPTION:
The high frequency response adjustments (A5C6, A5R53) trim the Z-axis amplifier pulse response for a rise time consistent with minimum overshoot (rise time = ≤25 microseconds, overshoot typically is ≤5%).

EQUIPMENT:
Monitor Oscilloscope
Pulse Generator
Low Capacitance 50:1 Divider Probe

PROCEDURE:

a. Position beam off-screen and apply 10 kHz, a +1 V, 1 microsecond wide (1% duty cycle) pulse to the Z-axis INPUT.

b. Set front panel INTENSITY CCW.

c. Connect the monitor oscilloscope to the Z-axis output (A5TPZ). Use the 50:1 divider probe.

d. Monitor the oscilloscope and adjust HF1 (A5C6) and HF2 (A5R53) to obtain a pulse of ≤25 nanosecond rise time with minimum perturbations (±5% typical).

5-15. Z-AXIS GAIN, OFFSET, AND INTENSITY LIMIT ADJUSTMENTS. OPTION 003 - INTENSITY BRIGHTNESS CONFIGURATION.

REFERENCE:
Service Sheet 4.

DESCRIPTION:
See Paragraph 5-13.

EQUIPMENT:
Monitor Oscilloscope
Digital Voltmeter
Pulse Generator
Function Generator

PROCEDURE:

a. Follow steps a. through g. of STD configuration procedure in Paragraph 5-13.

b. Turn off the display's power and switch Phosphor Protect (A8S1) off.

c. Move INT jumper from "S" to "O" position (A5E5, A5E6).

d. Connect a 1 V p-p 100 kHz square wave signal to the Z-axis input. Connect a sweep signal to the X-input to avoid CRT damage.

e. Adjust G CAL (A5R17) for a 50 V p-p signal at A5TPZ. Rotate front panel Intensity control to be sure signal is not clamped.

f. Turn front panel Intensity control fully clockwise. Adjust OFFSET (A5R21) for a maximum signal peak of 70 volts. Rotate the front panel Intensity control fully counterclockwise. The signal should compress to approximately a 10 volt level.

g. Switch Phosphor Protect (A8S1) on and remove the X-input signal. Verify that the Z-axis output at A5TPZ is clamped at less than 20 volts.

OPTIONAL BINARY Z-AXIS INPUT TEST.

a. Connect a series resistor, approximately 2 kΩ, to the output of a power supply.

b. Set power supply output to +5 VDC.

c. Apply +5 VDC to J6 pins 4, 5, 17 and check for a blanked display.

STANDARD FACTORY SETTING

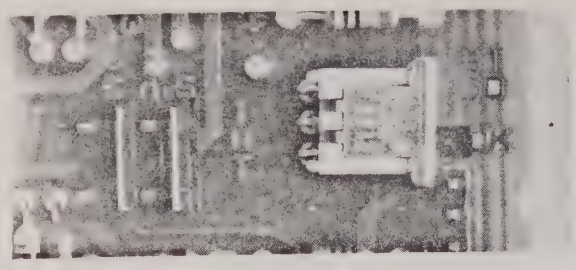

INTENSITY CONNECTED IN THE CONTRAST MODE
STANDARD TTL BLANKING CONFIGURATION
(+ BLANKS SCREEN)

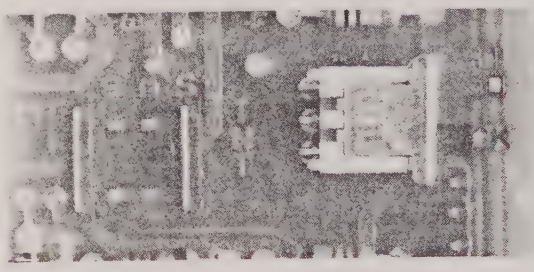

INTENSITY CONNECTED IN CONTRAST MODE
NEGATIVE TTL BLANKING CONFIGURATION
(– BLANKS THE SCREEN)

OPTION 003

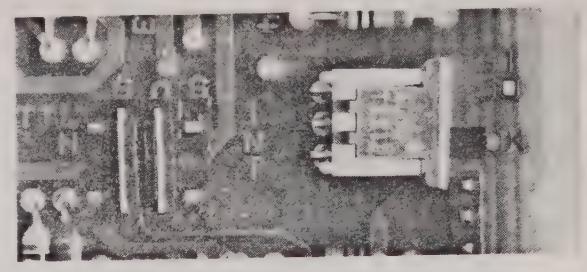

INTENSITY CONNECTED AS BRIGHTNESS CONTROL
POSITIVE TTL BLANKING CONFIGURATION
(+ BLANKS SCREEN)

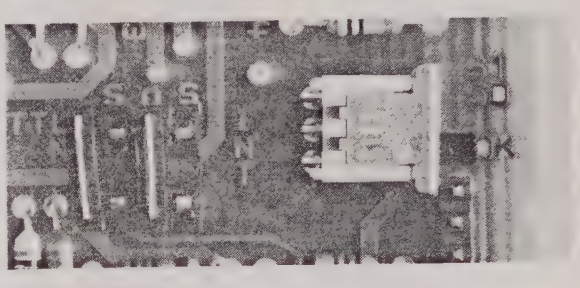

INTENSITY CONNECTED AS BRIGHTNESS CONTROL
– TTL BLANKING CONFIGURATION
(– BLANKS THE SCREEN)

Figure 3-7. Jumper Connections for TTL Blanking and Intensity (A5E5-A5E8)

PINS 4, 5, 17, 18 ARE USED FOR BINARY Z-AXIS INPUT.

Figure 3-8. Binary Z-Axis Input Connector, J6

Table 5-4. Focus and Astigmatism Test Program

```
0: dim A$[5],B$[5],C$[5],D$[5]
1: cli 7
2: wtb 718,3,20,13,10,"EM::EN::EX::SN::UM::"
3: fmt 1,f4.0,",",f4.0,";"
4: wrt 718,"PE0,::PA0,0"
5: wrt 718,"PE1,::PA0,1022;1022,1022;1022,0;0,0;"
6: 0→X;0→Y;"FC"→A$;"AC"→B$;gsb "X"
7: 896→Y;gsb "X"
8: 896→X;gsb "X"
9: 0→Y;gsb "X"
10: 0→X;200→Y;"FY1"→A$;"AY1"→B$;gsb "X"
11: 696→Y;gsb "X"
12: 896→X;gsb "X"
13: 200→Y;gsb "X"
14: 200→X;0→Y;""→A$;""→B$;"FX1"→C$;"AX1"→D$;gsb "X"
15: 896→Y;gsb "X"
16: 696→X;gsb "X"
17: 0→Y;gsb "X"
18: 448→X;""→A$;""→B$;"FX2"→C$;"AX2"→D$;gsb "X"
19: 896→Y;gsb "X"
20: 0→X;448→Y;"FY2"→A$;"AY2"→B$;""→C$;""→D$;gsb "X"
21: 896→X;gsb "X"
22: 448→X;448→Y;"ZC"→A$;"ZC"→B$;"ZC"→C$;"ZC"→D$;gsb "X"
23: wrt 718.1,"PE0,::PA",X,Y
24: for I=0 to 719
25: wrt 718,"PE0,"
26: if frc(I/8)#0;gto 28
27: wrt 718,"PE1,"
28: wrt 718.1,"PA",90cos(I/2-135)+X+63,90sin(I/2-135)+Y+63
29: next I
30: stp
31: "X":
32: wrt 718.1,"PE0,::PA",X,Y
33: wrt 718.1,"PE1,::PA",X+126,Y+126
34: wrt 718.1,"PE0,::PA",X,Y+126
35: wrt 718.1,"PE1,::PA",X+126,Y
36: wrt 718.1,"PE0,::PA",X+50,Y+5
37: wtb 718,"PE1,::CS0,::TX",A$,3,13,10
38: wrt 718.1,"PE0,::PA",X+50,Y+90
39: wtb 718,"PE1,::CS0,::TX",B$,3,13,10
40: wrt 718.1,"PE0,::PA",X+5,Y+56
41: wtb 718,"PE1,::CS0,::TX",C$,3,13,10
42: wrt 718.1,"PE0,::PA",X+90,Y+56
43: wtb 718,"PE1,::CS0,::TX",D$,3,13,10
44: ret
*297
```

g. Adjust front panel X-Y GAIN so that the pattern on screen fills the viewing area. Set front panel INTENSITY fully cw (except Option 003). Check figure 5-13 for correct pattern.

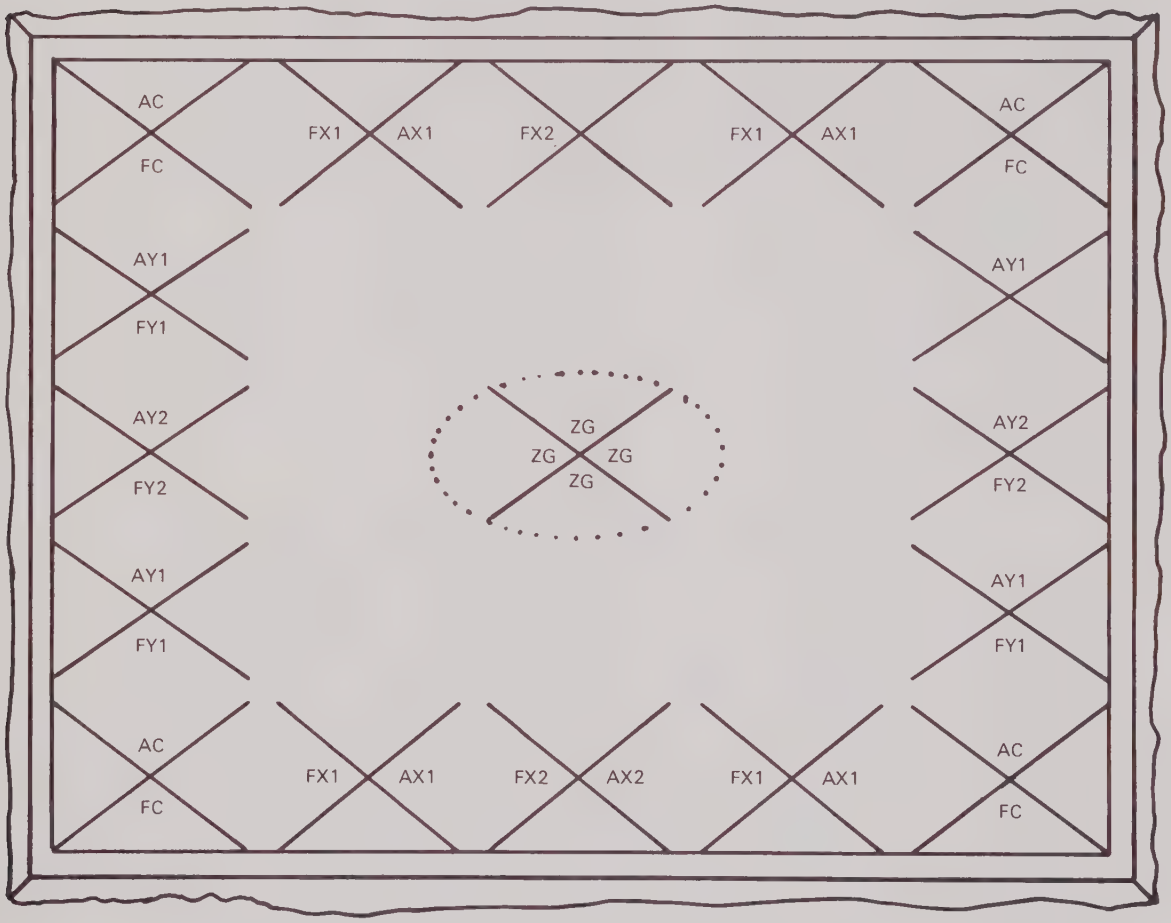

Figure 5-14. Focus and Astigmatism Test Pattern

h. Adjust astigmatism balance (A6R90) and focus limit (A9R30) for sharpest "X" crossings at the corners of the display.

i. Monitor the focus output (junction of A6Q25 and A6R110) and the astigmatism output (junction of A6Q21 collector and A6R96) with the monitor oscilloscope for the remainder of the adjustment procedure.

j. Set oscilloscope controls as follows and obtain the display as shown in figure 5-15:

DISPLAY ..... ALT
TIME/DIV ..... 2 milliseconds
CHANNEL INPUT ATTENUATORS ..... 50 V/DIV

ADJUSTMENTS

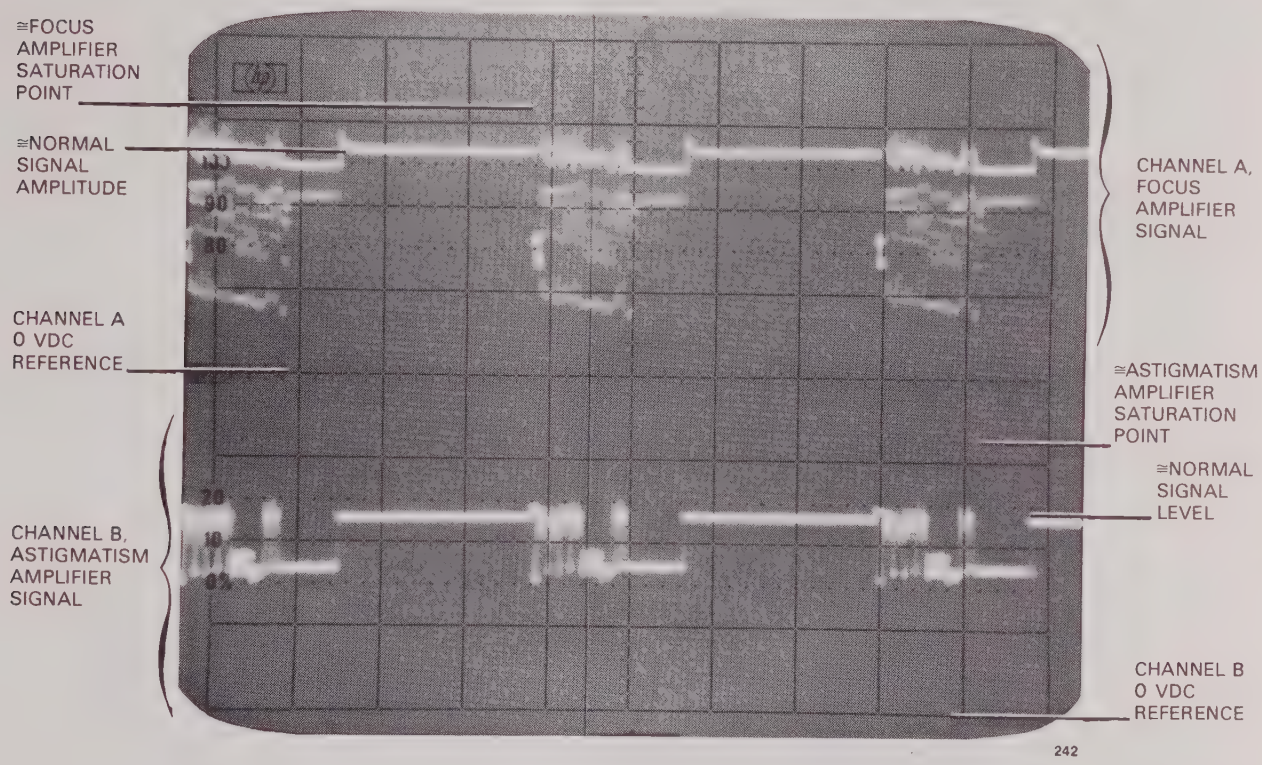

Figure 5-15. Focus and Astigmatism Output Waveforms

k. After each of the following adjustments (steps l through p) check the signal levels displayed on the oscilloscope. If either signal reaches 0 V or +165 V (amplifier saturation), readjust focus balance (A6R44) and/or astigmatism balance (A6R90) until each signal is between 0 V and +165 V.

l. Adjust FX2 and AX2 for sharpest "X" crossing at positions indicated on screen.

m. Adjust FX1 and AX1 for sharpest "X" crossing at positions indicated on screen.

n. Adjust FY2 and AY2 for sharpest "X" crossing at positions indicated on screen.

o. Adjust FY1 and AY1 for sharpest "X" crossing at positions indicated on screen.

p. All "X" crossings on screen, including the center, should now appear sharply focused. Repeat steps c through o if display is not focused.

q. Adjust focus gain (A6R43) for best focused dotted figure at center screen.

r. All elements of the displayed pattern, including alphanumerics, should now be sharply focused. If not, repeat procedure from step l on.

5-24. DYNAMIC FOCUS AND ASTIGMATISM ADJUSTMENT (Alternate Procedure).

REFERENCE:
Service Sheets 5 and 6.

DESCRIPTION:
The following procedure describes the dynamic focus and astigmatism adjustment when the 1350A Graphics Translator and the 9825A HP-IB Controller are not available.

EQUIPMENT:
Pulse Generators (2)
Monitor Oscilloscope

PROCEDURE:
a. Connect equipment as shown in figure 5-16.

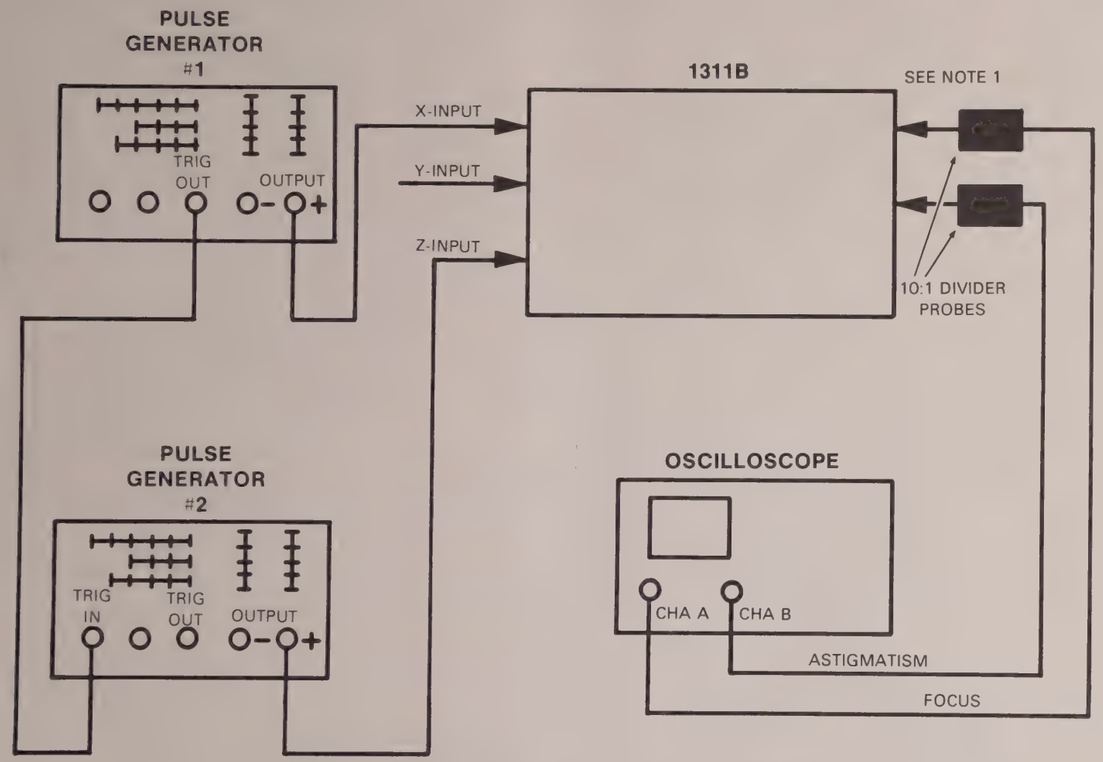

NOTE 1. CONNECT CHANNEL A DIVIDER PROBE TO JUNCTION OF A6Q25 AND A6R111. CONNECT CHANNEL B DIVIDER PROBE TO JUNCTION OF A6Q21 AND A6R96.

Figure 5-16. Dynamic Focus and Astigmatism Test Setup

b. Set pulse generator No. 1 controls as follows:

PULSE PERIOD	.2 milliseconds
PULSE WIDTH	50% duty cycle
AMPLITUDE	1 V p-p

c. Set pulse generator No. 2 controls as follows:

PULSE PERIOD	EXT. TRIGGER
PULSE WIDTH	10 microseconds
AMPLITUDE	1 V p-p

d. Set oscilloscope controls as follows and obtain the display as shown in figure 5-17.

DISPLAY	ALT
TIME/DIV	50 microseconds
CHANNEL INPUT ATTENUATORS	50 V/DIV

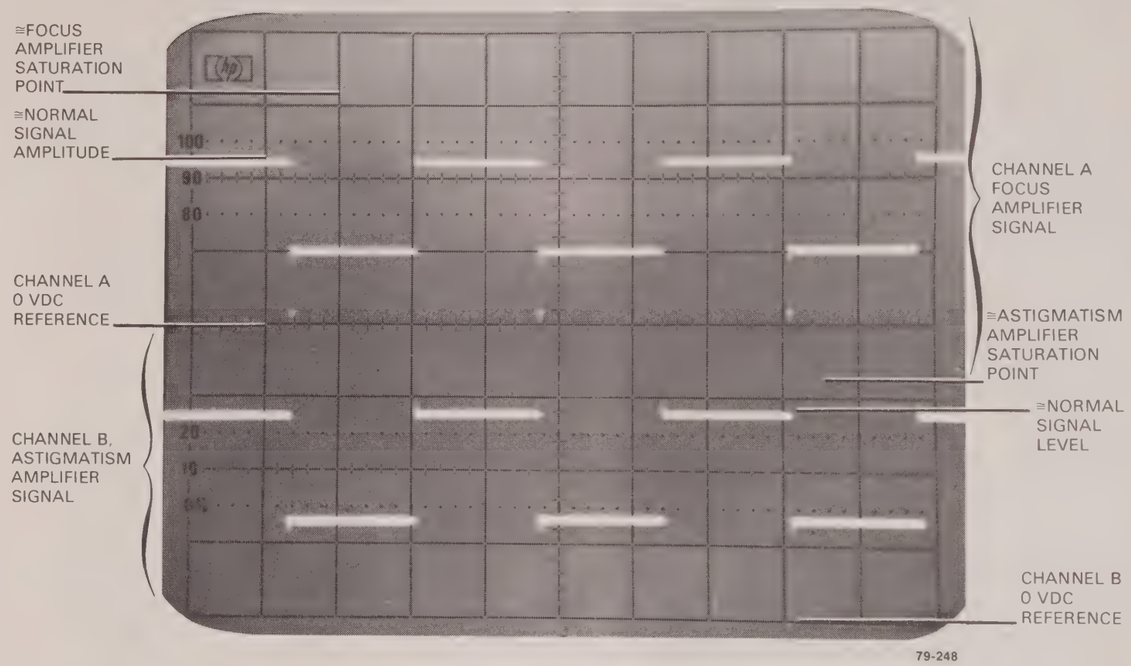

Figure 5-17. Focus and Astigmatism Waveforms

e. Set focus gain (A6R43) fully ccw. Set all other adjustments on the focus and astigmatism assembly (A6) to center. Adjust front panel FOCUS and ASTIGMATISM to center.

f. Disconnect pulse generator No. 1 and position beam to location No. 1 on screen (see figure 5-18).

5-24. DYNAMIC FOCUS AND ASTIGMATISM ADJUSTMENT (Alternate Procedure).

REFERENCE:
Service Sheets 5 and 6.

DESCRIPTION:
The following procedure describes the dynamic focus and astigmatism adjustment when the 1350A Graphics Translator and the 9825A HP-IB Controller are not available.

EQUIPMENT:
Pulse Generators (2)
Monitor Oscilloscope

PROCEDURE:
a. Connect equipment as shown in figure 5-16.

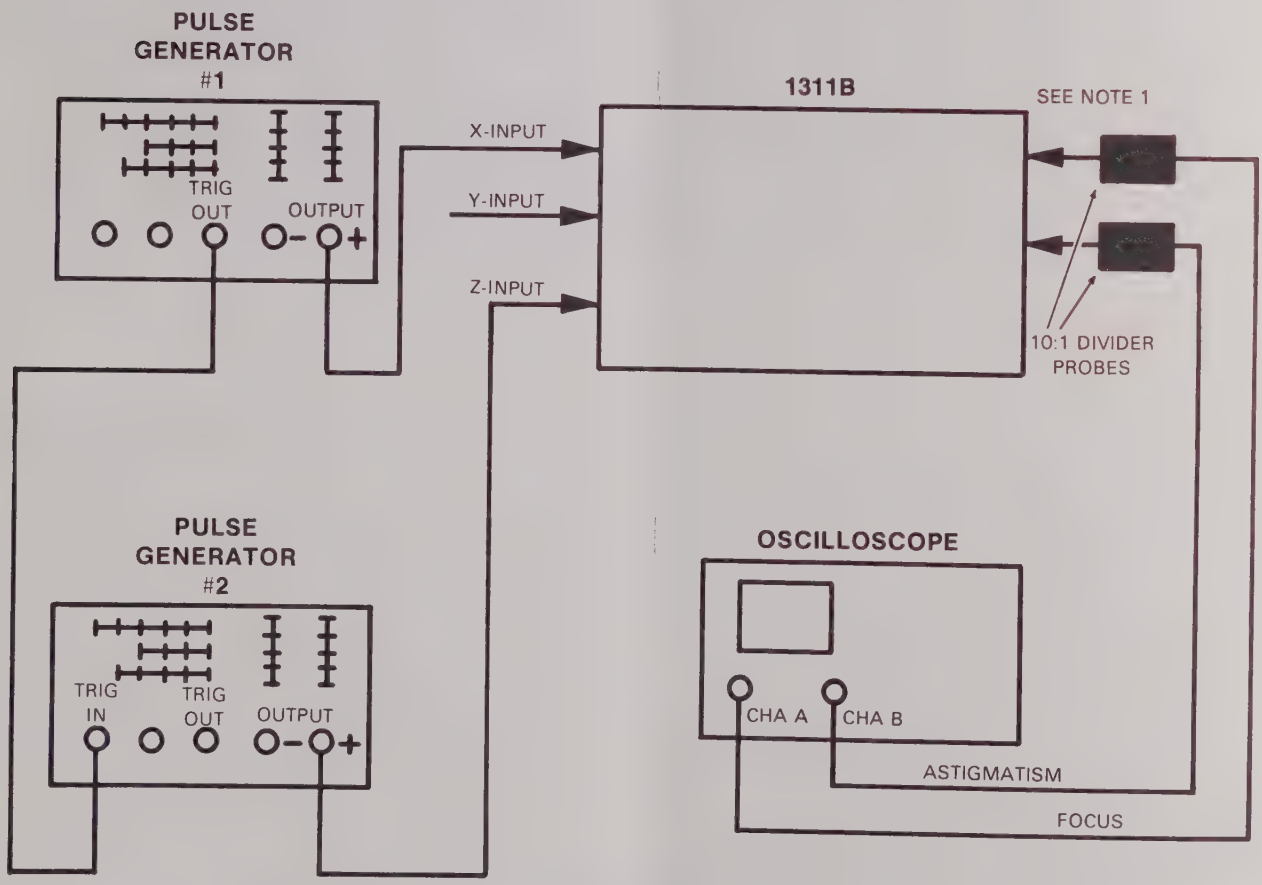

NOTE 1. CONNECT CHANNEL A DIVIDER PROBE TO JUNCTION OF A6Q25 AND A6R111.
CONNECT CHANNEL B DIVIDER PROBE TO JUNCTION OF A6Q21 AND A6R96.

Figure 5-16. Dynamic Focus and Astigmatism Test Setup

ADJUSTMENTS

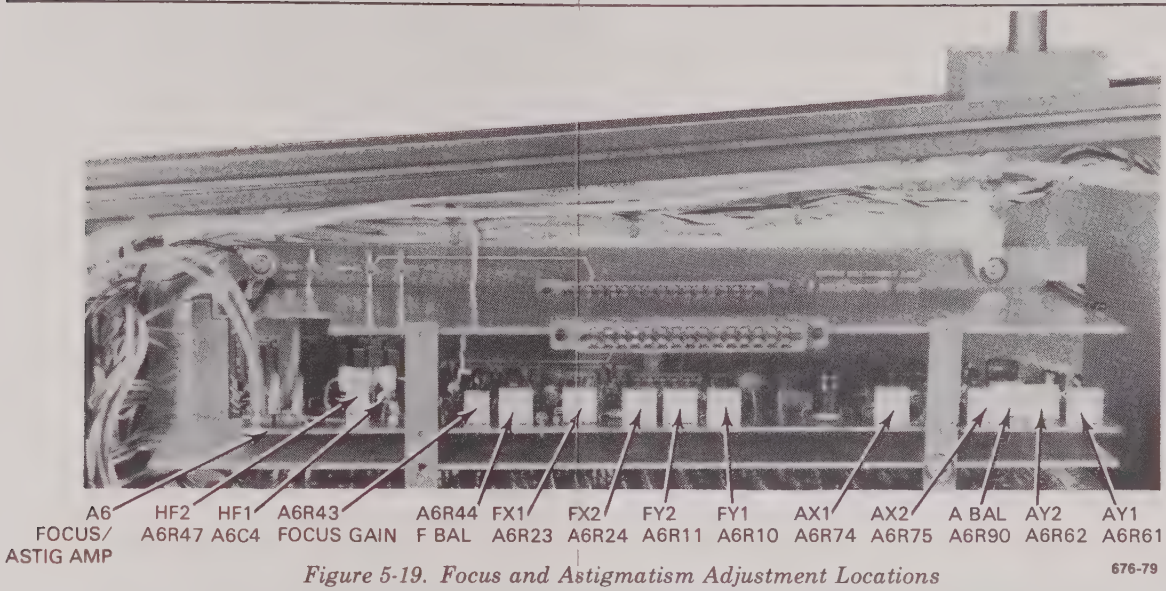

Figure 5-19. Focus and Astigmatism Adjustment Locations

Table 5-5. Focus and Astigmatism Adjustments

Reference Designator	Adjustment Name	Adjustment Paragraph	Service Sheet	Description
Front Panel Adjustment				
A13R8	TRACE ALIGN	5-22	7	Adjust trace to lie along X-AXIS of CRT
A13R9	ORTHOG	5-22	7	Adjust trace to lie along Y-AXIS of CRT
A9R30	FOCUS LIMIT	5-23; 5-24	7	Adjust for best focus in the corners of the display
A6R90	ASTIGMATISM BALANCE	5-23; 5-24	6	Adjust to keep astigmatism output signal between a signal level of 0 V to +140 V
A6R44	FOCUS BALANCE	5-23; 5-24	5	Adjust to keep focus output signal between a signal level of 0 V to +140 V
A6R24; A6R75	FX2; AX2	5-23; 5-24	5; 6	Adjust for best focused dot at location No. 2 (see figure 5-11 for location)
A6R23; A6R71	FX1; AX1	5-23; 5-24	5; 6	Adjust for best focused dot at location No. 3 (see figure 5-11)
A6R11; A6R62	FY2; AY2	5-23; 5-24	5; 6	Adjust for best focused dot at location No. 4 (see figure 5-11)
A6R10; A6R61	FY1; AY1	5-23; 5-24	5; 6	Adjust for best focused dot at location No. 5 (see figure 5-11)
A6R43	FOCUS GAIN	5-23; 5-24	5	Adjust for best focused dot at location No. 6 (see figure 5-11)

SECTION VI

REPLACEABLE PARTS

6-1. INTRODUCTION.

6-2. This section contains information for ordering parts. Table 6-1 lists abbreviations used in the parts list, table 6-2 lists all replaceable parts in reference designator order.

6-3. ABBREVIATIONS.

6-4. Table 6-1 lists abbreviations used in the parts list, the schematics, and throughout the manual. In some cases, two forms of the abbreviation are used, one all in capital letters, and one partial or no capitals. This occurs because the abbreviations in the parts list are always all capitals. However, in other parts of the manual other abbreviation forms are used with both lowercase and uppercase letters.

6-5. REPLACEABLE PARTS LIST.

6-6. Table 6-2 is the list of replaceable parts and is organized as follows:

a. Electrical assemblies in alphanumerical order by reference designation.

b. Chassis-mounted parts in alphanumerical order by reference designation.

c. Electrical assemblies and their components in alphanumerical order by reference designation.

The information given for each part consists of the following:

a. Complete reference designation.

b. Hewlett-Packard part number.

c. Total quantity (Qty) in instrument.

d. Description of part.

e. Check digit.

The total quantity for each part is given only once — at the first appearance of the part number in the list.

6-7. ORDERING INFORMATION.

6-8. To order a part listed in the replaceable parts table, quote the Hewlett-Packard part number, check digit, indicate the quantity required, and address the order to the nearest Hewlett-Packard office.

6-9. To order a part that is not listed in the replaceable parts table, include the instrument model number, instrument serial number, the description and function of the part, and the number of parts required. Address the order to the nearest Hewlett-Packard office.

6-10. DIRECT MAIL ORDER SYSTEM.

6-11. Within the USA, Hewlett-Packard can supply parts through a direct mail order system. Advantages of using the system are as follows:

a. Direct ordering and shipment from HP Parts Center in Mountain View, California.

b. No maximum or minimum on any mail order (there is minimum order amount for parts ordered through local HP offices when orders require billing and invoicing).

c. Prepaid transportation (there is small handling charge for each order).

d. No invoices — to provide these advantages, check or money order must accompany each order.

6-12. Mail order forms and specific ordering information are available through your local HP office.

Table 6-1. Reference Designators and Abbreviations

REFERENCE DESIGNATORS

A	= assembly	**F**	= fuse	**MP**	= mechanical part	**U**	= integrated circuit
B	= motor	**FL**	= filter	**P**	= plug	**V**	= vacuum, tube, neon bulb, photocell, etc
BT	= battery	**IC**	= integrated circuit	**Q**	= transistor		
C	= capacitor	**J**	= jack	**R**	= resistor	**VR**	= voltage regulator
CP	= coupler	**K**	= relay	**RT**	= thermistor	**W**	= cable
CR	= diode	**L**	= inductor	**S**	= switch	**X**	= socket
DL	= delay line	**LS**	= loud speaker	**T**	= transformer	**Y**	= crystal
DS	= device signaling (lamp)	**M**	= meter	**TB**	= terminal board	**Z**	= tuned cavity network
E	= misc electronic part	**MK**	= microphone	**TP**	= test point		

ABBREVIATIONS

A	= amperes	**H**	= henries	**N/O**	= normally open	**RMO**	= rack mount only
AFC	= automatic frequency control	**HDW**	= hardware	**NOM**	= nominal	**RMS**	= root-mean square
AMPL	= amplifier	**HEX**	= hexagonal	**NPO**	= negative positive zero (zero temperature coefficient)	**RWV**	= reverse working voltage
		HG	= mercury				
BFO	= beat frequency oscillator	**HR**	= hour(s)				
BE CU	= beryllium copper	**HZ**	= hertz	**NPN**	= negative-positive-negative	**S-B**	= slow-blow
BH	= binder head					**SCR**	= screw
BP	= bandpass			**NRFR**	= not recommended for field replacement	**SE**	= selenium
BRS	= brass	**IF**	= intermediate freq			**SECT**	= section(s)
BWO	= backward wave oscillator	**IMPG**	= impregnated	**NSR**	= not separtely replaceable	**SEMICON**	= semiconductor
		INCD	= incandescent			**SI**	= silicon
CCW	= counter-clockwise	**INCL**	= include(s)			**SIL**	= silver
CER	= ceramic	**INS**	= insulation(ed)	**OBD**	= order by description	**SL**	= slide
CMO	= cabinet mount only	**INT**	= internal	**OH**	= oval head	**SPG**	= spring
COEF	= coeficient			**OX**	= oxide	**SPL**	= special
COM	= common	**K**	= kilo=1000			**SST**	= stainless steel
COMP	= composition					**SR**	= split ring
COMPL	= complete	**LH**	= left hand	**P**	= peak	**STL**	= steel
CONN	= connector	**LIN**	= linear taper	**PC**	= printed circuit		
CP	= cadmium plate	**LK WASH**	= lock washer	**PF**	= picofarads = 10^{-12} farads	**TA**	= tantalum
CRT	= cathode-ray tube	**LOG**	= logarithmic taper			**TD**	= time delay
CW	= clockwise	**LPF**	= low pass filter	**PH BRZ**	= phosphor bronze	**TGL**	= toggle
				PHL	= phillips	**THD**	= thread
DEPC	= deposited carbon	**M**	= milli=10^{-3}	**PIV**	= peak inverse voltage	**TI**	= titanium
DR	= drive	**MEG**	= meg=10^{6}	**PNP**	= positive-negative-positive	**TOL**	= tolerance
		MET FLM	= metal film			**TRIM**	= trimmer
ELECT	= electrolytic	**MET OX**	= metallic oxide	**P/O**	= part of	**TWT**	= traveling wae tube
ENCAP	= encapsulated	**MFR**	= manufacturer	**POLY**	= polystyrene		
EXT	= external	**MHZ**	= mega hertz	**PORC**	= porcelain	**U**	= micro=10^{-6}
		MINAT	= miniature	**POS**	= position(s)		
F	= farads	**MOM**	= momentary	**POT**	= potentiometer	**VAR**	= variable
FH	= flat head	**MOS**	= metal oxide substrate	**PP**	= peak-to-peak	**VDCW**	= dc working volts
FIL H	= fillister head	**MTG**	= mounting	**PT**	= point		
FXD	= fixed	**MY**	= "mylar"	**PWV**	= peak working voltage	**W/**	= with
						W	= watts
G	= giga (10^{9})	**N**	= nano (10^{-9})	**RECT**	= rectifier	**WIV**	= working inverse voltage
GE	= germanium	**N/C**	= normally closed	**RF**	= radio frequency		
GL	= glass	**NE**	= neon	**RH**	= round head or right hand	**WW**	= wirewound
GRD	= grounded	**NI PL**	= nickel plate			**W/O**	= without

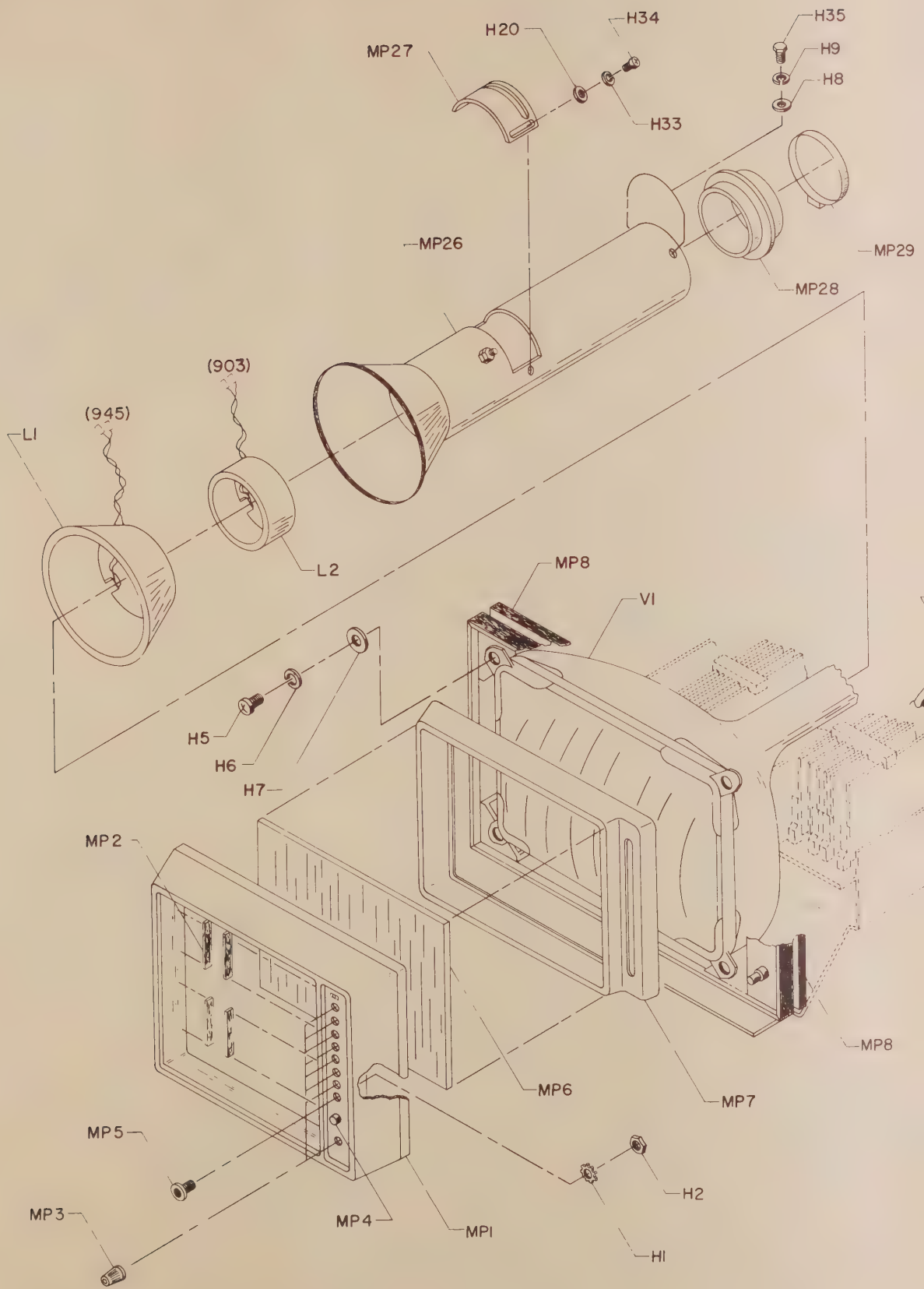
H34
H20
MP27
H35
H9
H8
H33
MP26
MP29
MP28
(903)
(945)
LI
L2
MP8
VI
H5
H6
H7
MP2
MP8
MP6
MP7
MP5
H2
MP3
MP4
MPI
HI

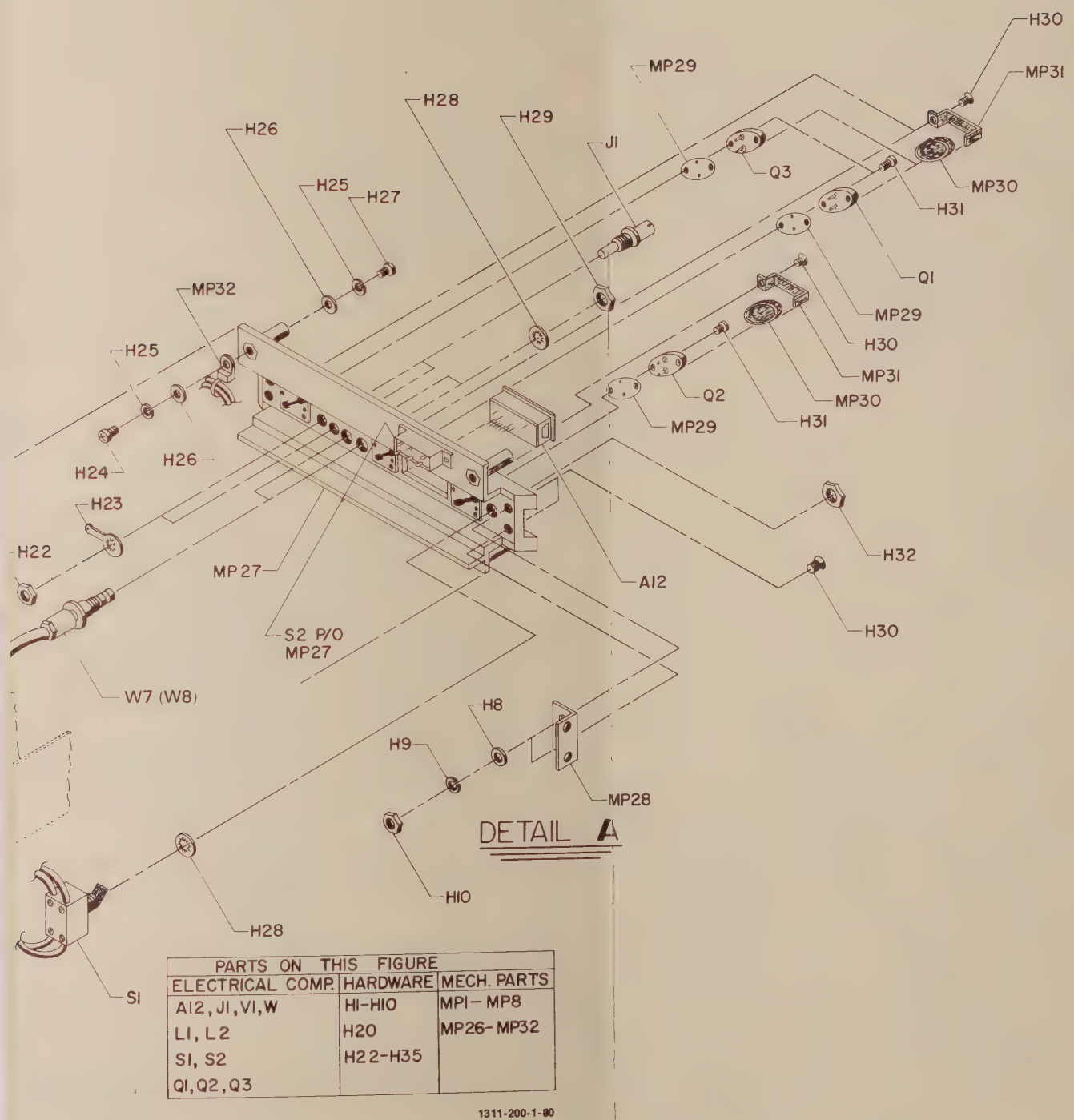

PARTS ON THIS FIGURE		
ELECTRICAL COMP.	HARDWARE	MECH. PARTS
A12, J1, V1, W	H1-H10	MP1-MP8
L1, L2	H20	MP26-MP32
S1, S2	H22-H35	
Q1, Q2, Q3		

1311-200-1-80

Figure 6-1.
Chassis Parts and Board Assembly Identification
(Sheet 1 of 3)

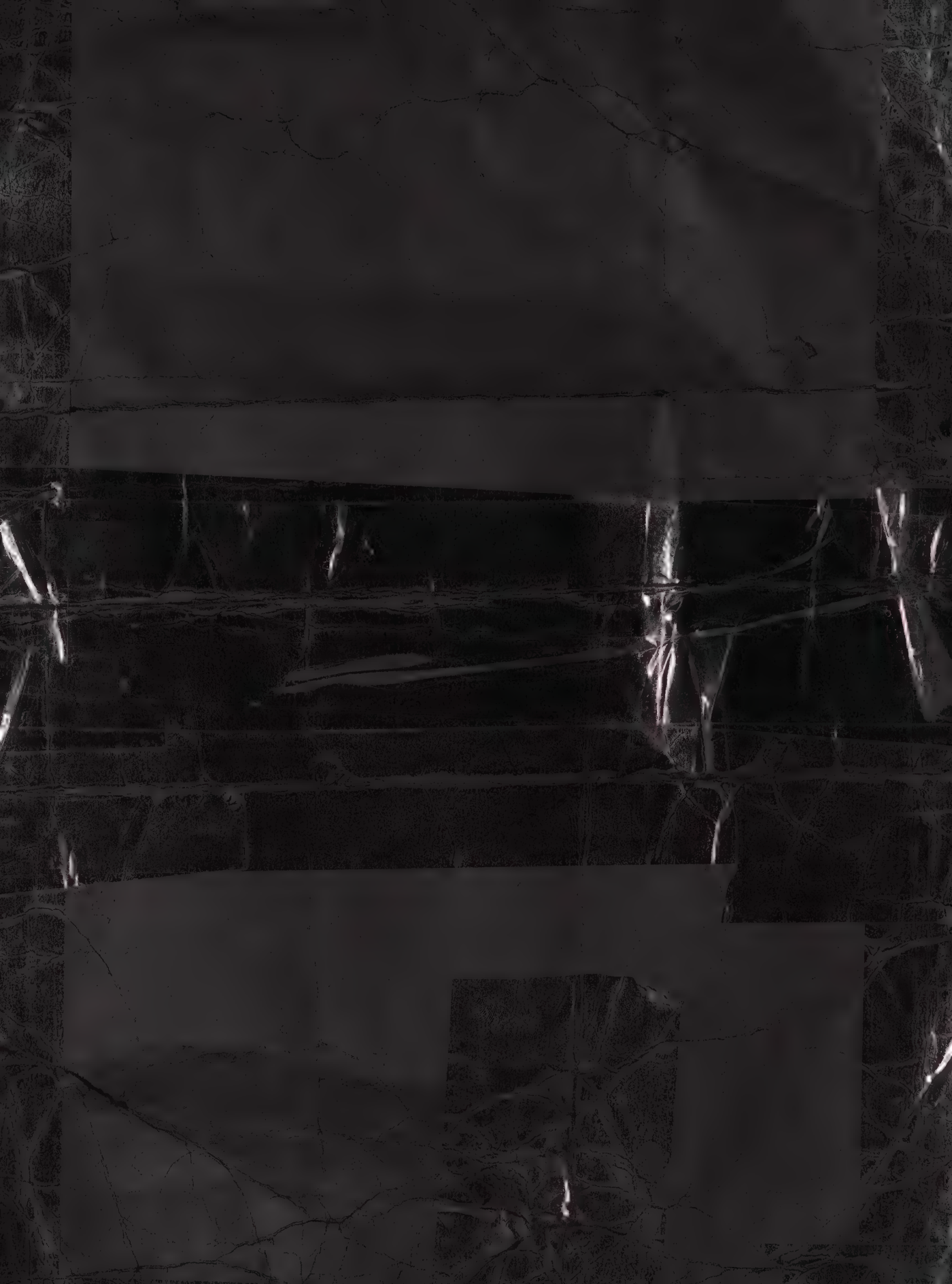

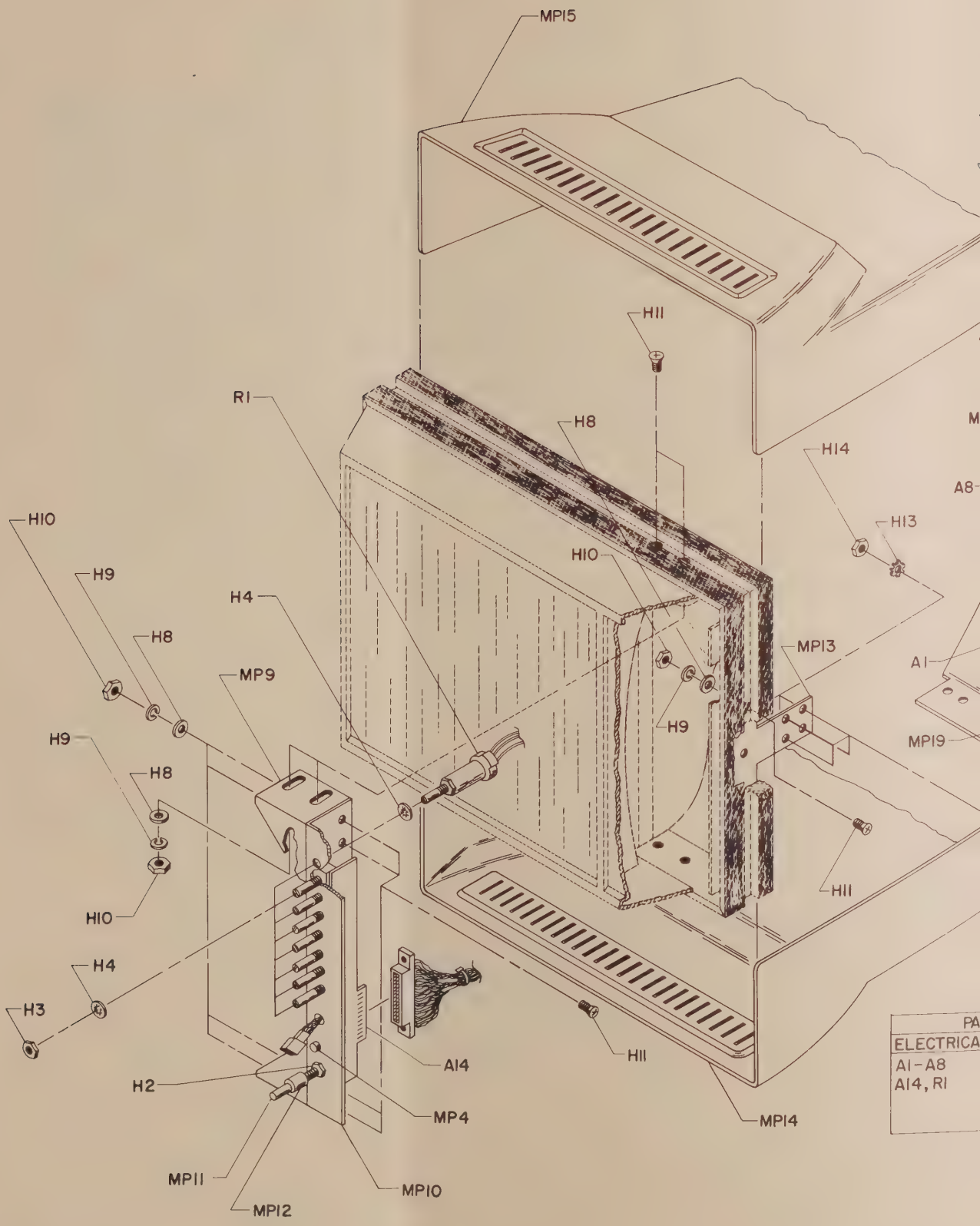
MP15
H11
R1
H8
H14
A8
H13
H10
H9
H4
H8
MP9
H10
MP13
A1
H9
MP19
H9
H8
H11
H10
H4
H3
A14
H11
H2
MP4
MP14
MP11
MP10
MP12
PA
ELECTRICA
A1-A8
A14, R1

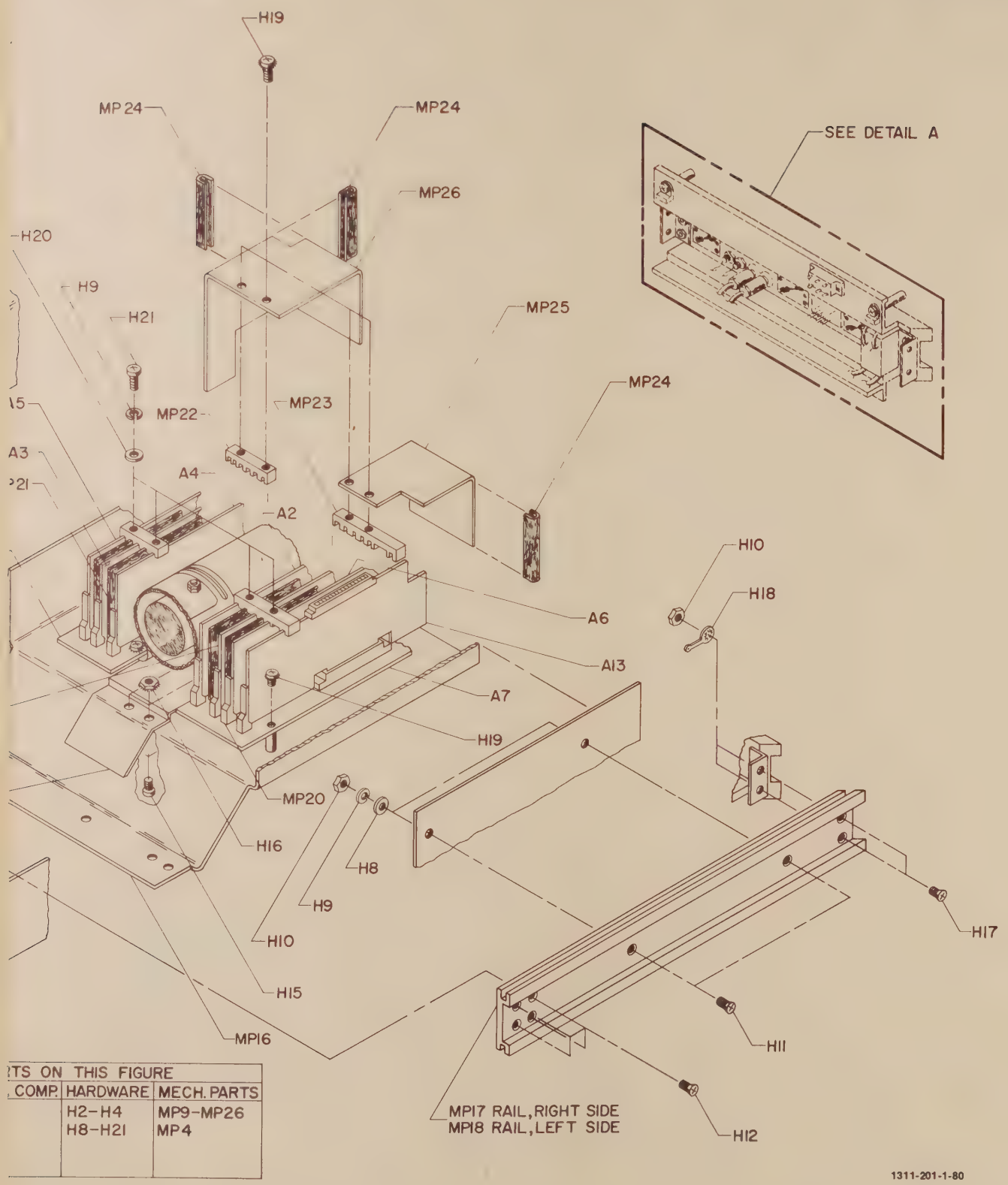

TS ON THIS FIGURE		
COMP.	HARDWARE	MECH. PARTS
	H2-H4 H8-H21	MP9-MP26 MP4

Figure 6-1. Chassis Parts and Board Assembly Identification (Sheet 2 of 3)

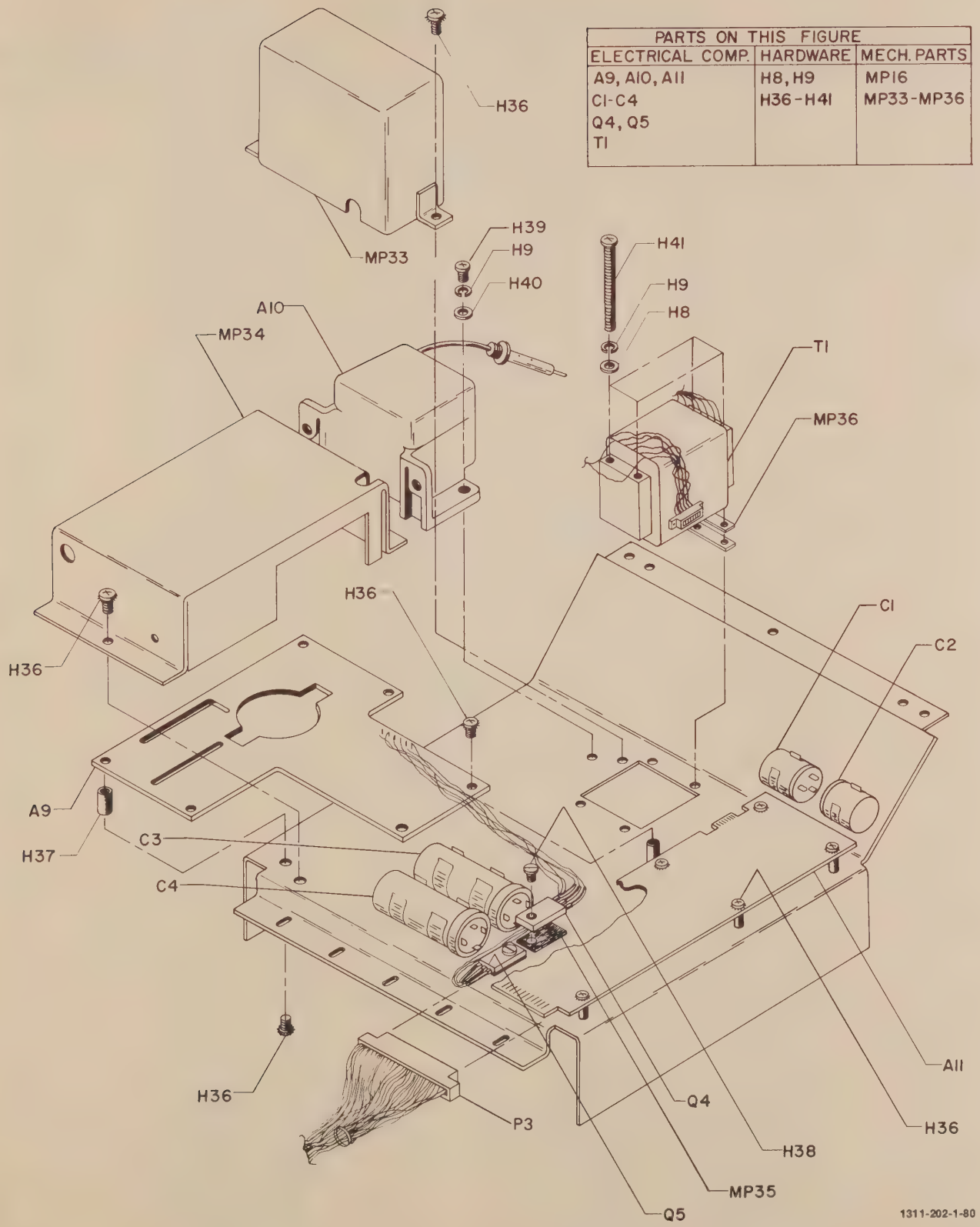

Figure 6-1. Chassis Parts and Board Assembly Identification (Sheet 3 of 3)

Table 6-2. Replaceable Parts

Reference Designation	HP Part Number	C D	Qty	Description	Mfr Code	Mfr Part Number
				CHASSIS PARTS		
A1	01317-66503	6	2	BOARD ASSEMBLY-INPUT AMPLIFIER	28480	01317-66503
A2	01310-66530	2	2	PC BOARD ASSEMBLY-OUTPUT AMPLIFIER	28480	01310-66530
A3	01317-66503	6		BOARD ASSEMBLY-INPUT AMPLIFIER	28480	01317-66503
A4	01310-66530	2		PC BOARD ASSEMBLY-OUTPUT AMPLIFIER	28480	01310-66530
A5	01311-66502	9	1	Z-AXIS BOARD	28480	01311-66502
A6	01317-66501	4	1	BOARD ASSEMBLY-FOCUS	28480	01317-66501
A7	01317-66504	7	1	BOARD ASSEMBLY-LEFT CONNECTOR	28480	01317-66504
A8	01317-66505	8	1	PC BOARD ASSEMBLY-RIGHT CONNECTOR	28480	01317-66505
A9	01311-66504	1	1	BOARD ASSEMBLY-HIGH VOLTAGE	28480	01311-66504
A10	0960-0560	3	1	MULTIPLIER-HV	28480	0960-0560
A11	01310-66533	5	1	PC BOARD ASSEMBLY-LOW VOLTAGE POWER SUPP	28480	01310-66533
A12	0960-0444	2	1	LINE MODULE-UNFILTERED	28480	0960-0444
A13	01311-66503	0	1	BOARD ASSEMBLY-CONTROL	28480	01311-66503
A14	01310-66513	1	1	PC BOARD ASSEMBLY-EXT	28480	01310-66513
C1	0180-0030	2	2	CAPACITOR-FXD 120UF+75-10% 350VDC AL	28480	0180-0030
C2	0180-0030	2		CAPACITOR-FXD 120UF+75-10% 350VDC AL	28480	0180-0030
C3	0180-0213	9	2	CAPACITOR-FXD 5000UF+75-10% 25VDC AL	28480	0180-0213
C4	0180-0213	9		CAPACITOR-FXD 5000UF+75-10% 25VDC AL	28480	0180-0213
C5	0150-0052	1	2	CAPACITOR-FXD .05UF +-20% 400VDC CER	28480	0150-0052
C6	0150-0052	1		CAPACITOR-FXD .05UF +-20% 400VDC CER	28480	0150-0052
DS1	1450-0440	8	1	LIGHT-IND WHT-TL .4-DIA FKD-TERM PUSH-ON	28480	1450-0440
F1	2110-0020	1	1	FUSE .8A 250V 1.25X.25 UL	75915	313.800
F1	2110-0059	6	1	FUSE 1.5A 250V 1.25X.25 UL	71400	MDX 1-1/2
H1	0510-0123	1	1	RETAINER-PUSH ON RECT EXT .312-IN-DIA	28480	0510-0123
H1	2190-0008	3	6	WASHER-LK EXT T NO. 6 .141-IN-ID	28480	2190-0008
H2	2950-0006	3	1	NUT-HEX-DBL-CHAM 1/4-32-THD .094-IN-THK	00000	ORDER BY DESCRIPTION
	2950-0001	8	9	NUT-HEX-DBL-CHAM 3/8-32-THD .094-IN-THK	00000	ORDER BY DESCRIPTION
H4	2190-0083	4	1	WASHER-LK INTL T 1/2 IN .512-IN-ID	28480	2190-0083
H5	2680-0105	0	4	SCREW-MACH 10-32 .625-IN-LG PAN-HD-POZI	00000	ORDER BY DESCRIPTION
H6	2190-0019	6	7	WASHER-LK HLCL NO. 4 .115-IN-ID	28480	2190-0019
H7	3050-0179	4	4	WASHER-FL MTLC NO. 10 .203-IN-ID	28480	3050-0179
H8	3050-0066	8	36	WASHER-FL MTLC NO. 6 .147-IN-ID	28480	3050-0066
H9	2190-0017	4	7	WASHER-LK HLCL NO. 8 .168-IN-ID	28480	2190-0017
H10	2420-0002	6	16	NUT-HEX-DBL-CHAM 6-32-THD .109-IN-THK	28480	2420-0002
H11	2360-0200	8	14	SCREW-MACH 6-32 .5-IN-LG 100 DEG	00000	ORDER BY DESCRIPTION
H12	2360-0120	1	12	SCREW-MACH 6-32 .438-IN-LG 82 DEG	00000	ORDER BY DESCRIPTION
H13	2190-0034	5	4	WASHER-LK HLCL NO. 10 .194-IN-ID	28480	2190-0034
H14	2420-0002	6		NUT-HEX-DBL-CHAM 6-32-THD .109-IN-THK	28480	2420-0002
H15	2420-0001	5	1	NUT-HEX-W/LKWR 6-32-THD .109-IN-THK	00000	ORDER BY DESCRIPTION
H16	2360-0115	4	39	SCREW-MACH 6-32 .312-IN-LG PAN-HD-POZI	00000	ORDER BY DESCRIPTION
H17	2360-0118	7	4	SCREW-MACH 6-32 .375-IN-LG 82 DEG	00000	ORDER BY DESCRIPTION
H18	0360-0001	5	8	TERMINAL-SLDR LUG LK-MTG FOR-#6-SCR	28480	0360-0001
H19	2360-0117	6	4	SCREW-MACH 6-32 .375-IN-LG PAN-HD-POZI	00000	ORDER BY DESCRIPTION
H21	2360-0201	9	15	SCREW-MACH 6-32 .5-IN-LG PAN-HD-POZI	00000	ORDER BY DESCRIPTION
	2950-0001	8		NUT-HEX-DBL-CHAM 3/8-32-THD .094-IN-THK	00000	ORDER BY DESCRIPTION
H23	0360-1632	0	1	TERMINAL-SLDR LUG LK-MTG FOR-#3/8-SCR	28480	0360-1632
H24	2510-0103	9	3	SCREW-MACH 8-32 .375-IN-LG PAN-HD-POZI	00000	ORDER BY DESCRIPTION
H25	2190-0016	3	8	WASHER-LK INTL T 3/8 IN .377-IN-ID	28480	2190-0016
H26	3050-0001	1	9	WASHER-FL MTLC NO. 8 .172-IN-ID	28480	3050-0001
H27	2510-0107	3	4	SCREW-MACH 8-32 .5-IN-LG PAN-HD-POZI	00000	ORDER BY DESCRIPTION
H28	2190-0047	0	24	WASHER-LK 82 CTSK EXT T NO. 6 .142-IN-ID	28480	2190-0047
H29	2950-0054	1	2	NUT-HEX-DBL-CHAM 1/2-28-THD .125-IN-THK	00000	ORDER BY DESCRIPTION
H31	0624-0232	4	6	SCREW-TPG 6-20 .5-IN-LG PAN-HD-SLT STL	00000	ORDER BY DESCRIPTION
H32	2950-0035	8	1	NUT-HEX-DBL-CHAM 15/32-32-THD	00000	ORDER BY DESCRIPTION
H33	2190-0018	5	41	WASHER-LK HLCL NO. 6 .141-IN-ID	28480	2190-0018
H34	2200-0139	4	4	SCREW-MACH 4-40 .25-IN-LG PAN-HD-POZI	00000	ORDER BY DESCRIPTION
H35	0624-0310	9	2	SCREW-TPG 6-19 .312-IN-LG HEX-HD STL	28480	0624-0310
H40	3050-0235	3	4	WASHER-FL MTLC NO. 4 .117-IN-ID	28480	3050-0235
J1	1250-0118	3	1	CONNECTOR-RF BNC FEM SGL-HOLE-FR 50-OHM	28480	1250-0118
MP1	01311-44109*		1	OUTER FRONT PANEL MASK	28480	01311-44109
MP2	5001-0439		8	BEZEL TRIP	28480	5001-0439
MP3	0370-1093	4	1	KNOB-BASE-PTR 3/8 OBP .125-IN-ID	28480	0370-1093
MP4	1450-0440		1	LIGHT INDICATOR	28480	1450-0440
MP5	1410-0052		1	POT BUSHING	28480	1410-0052
MP6	1000-0565		1	FILTER GLASS	28480	1000-0565
MP7	01311-44108*		1	MASK INNER	28480	01311-44108
MP8	01311-63707	0	1	EXTRUSION ASSEMBLY-FRAME	28480	01311-63707
MP9	01310-01203	0	2	BRACKET-CORNER SUPPORT	28480	01310-01203
MP10	01311-00201		1	FRONT SUB PANEL	28480	01311-00201
MP11	01311-23708	7	1	SHAFT-EXTENSION	28480	01311-23708
MP12	1490-0841	7	1	COUPLER-RGD .375-LG BRS	28480	1490-0841
MP13	01311-01201	9	2	BRACKET-T SPLICE	28480	01311-01201
MP14	01311-44106	3	2	COVER	28480	01311-44106
MP15	01311-44106	3		COVER	28480	01311-44106
MP16	01311-00102	7	1	DECK-MAIN	28480	01311-00102
MP17	01311-23707	6	1	RAIL-RIGHT SIDE	28480	01311-23707

See introduction to this section for ordering information
*Indicates factory selected value

Table 6-2. Replaceable Parts (Cont'd)

Reference Designation	HP Part Number	C D	Qty	Description	Mfr Code	Mfr Part Number
MP18	01311-23706	5	1	RAIL-LEFT SIDE	28480	01311-23706
MP19	01311-00603	3	1	SHIELD-TRANSFORMER	28480	01311-00603
MP20	5040-0170	6	14	GUIDE;PLUG-IN PC BOARD	28480	5040-0170
MP21	01310-00601	0	4	SHIELD-AMPLIFIER	28480	01310-00601
MP22	5040-5892	9	2	MOLDER-PC BOARD, RIGHT	28480	5040-5892
MP23	5040-5891	8	2	MOLDER-PC BOARD, LEFT	28480	5040-5891
MP24	4320-0095	7	1	U CHANNEL NPRN .047-WD-CHAN .219-WD.	28480	4320-0095
MP25	01321-00601	3	1	SHIELD-FOCUS	28480	01321-00601
MP26	01310-60608	3	1	SHIELD ASSEMBLY-CRT	28480	01310-60608
MP26	01321-00603	5	1	SHIELD-Z AXIS	28480	01321-00603
MP27	01311-23720	3	1	RAIL-REAR	28480	01311-23720
MP28	01311-01204	2	2	BRACKET-REAR	28480	01311-01204
MP29	01310-21201	0	1	CLAMP-CRT	28480	01310-21201
	0340-0875	9	3	INSULATOR-XSTR THRM-CNDCT	28480	0340-0875
MP30	5020-8762	6	3	SCREW-MACHINE	28480	5020-8762
	0340-0486	8	3	INSULATOR-COVER NYLON	28480	0340-0486
MP31	01310-01215	4	3	STRAP-TRANSISTOR COVER	28480	01310-01215
MP32	1400-0335	5	3	CABLE TIE 1.75-DIA .188-WD NYL	28480	1400-0335
MP33	01311-04102	5	1	COVER-MULTIPLIER	28480	01311-04102
MP34	01311-04101	4	1	COVER-HIGH VOLTAGE	28480	01311-04101
MP36	01310-04702	0	4	SPACER-TRANSFORMER	28480	01310-04702
MP37	01311-68710	5	1	STAND ASSEMBLY-TILT	28480	01311-68710
P1	1251-1190		2	CONN PC 24 F	28480	1251-1190
P2	1251-1190			CONN PC 24 F	28480	1251-1190
P3	1251-0159		1	CONN PC .30 F	28480	1251-0159
P4	01317-27601		1	CONN PC 20 F	28480	01317-27601
Q1	1854-0417	5	1	TRANSISTOR NPN SI TO-3 PD=80W	28480	1854-0417
Q2	1854-0063	7	2	TRANSISTOR NPN 2N3055 SI TO-3 PD=115W	01928	2N3055
Q3	1854-0063	7		TRANSISTOR NPN 2N3055 SI TO-3 PD=115W	01928	2N3055
Q4	1854-0558	5	1	TRANSISTOR NPN SI DARL PD=70W FT=1MHZ	28480	1854-0558
Q5	1854-0433	5	1	TRANSISTOR NPN SI PD=90W FT=2MHZ	28480	1854-0433
R1	2100-3811	3	1	RESISTOR-VAR CONTROL CCP 500K 20% LIN	28480	2100-3811
	01311-68712	7	1	KIT-TILT STAND	28480	01311-68712
S1	3101-2332	4	1	SWITCH-TGL BASIC DPST 6A 250VAC/DC SCR	28480	3101-2332
T1	9100-0484	7	1	TRANSFORMER-POWER	28480	9100-0484
V1	5083-3251		1	CRT P31	28480	5083-3251
W1	8120-2061	1	1	POWER CORD ASSY-DC	28480	8120-2061
W2	00183-61625	9	2	CABLE-HORIZ OUTPUT	28480	00183-61625
W3	00183-61625	9		CABLE-HORIZ OUTPUT	28480	00183-61625
W4				NOT ASSIGNED		
W7	01310-61606	3	2	CABLE ASSEMBLY-INPUT	28480	01310-61606
W8	01310-61606	3		CABLE ASSEMBLY-INPUT	28480	01310-61606
W9	01310-61622	3	1	CABLE ASSEMBLY-HV	28480	01310-61622

See introduction to this section for ordering information
*Indicates factory selected value

Table 6-2. Replaceable Parts (Cont'd)

Reference Designation	HP Part Number	C D	Qty	Description	Mfr Code	Mfr Part Number
A1	01317-66503	5	1	BOARD ASSEMBLY-INPUT AMPLIFIER	28480	01317-66503
A1C1	0160-3451	1	5	CAPACITOR-FXD .01UF +80-20% 100VDC CER	28480	0160-3451
A1C2	0160-3451	1		CAPACITOR-FXD .01UF +80-20% 100VDC CER	28480	0160-3451
A1C3	0160-3451	1		CAPACITOR-FXD .01UF +80-20% 100VDC CER	28480	0160-3451
A1C4	0160-0174	9	2	CAPACITOR-FXD .47UF +80-20% 25VDC CER	28480	0160-0174
A1C5	0160-3443	1	7	CAPACITOR-FXD .1UF +80-20% 50VDC CER	28480	0160-3443
A1C6	0160-3451	1		CAPACITOR-FXD .01UF +80-20% 100VDC CER	28480	0160-3451
A1C7	0160-3443	1		CAPACITOR-FXD .1UF +80-20% 50VDC CER	28480	0160-3443
A1C8	0160-2197	0	2	CAPACITOR-FXD 10PF +-5% 300VDC MICA	28480	0160-2197
A1C9	0160-2197	0		CAPACITOR-FXD 10PF +-5% 300VDC MICA	28480	0160-2197
A1C10	0160-0168	1	7	CAPACITOR-FXD .1UF +-10% 200VDC POLYE	28480	0160-0168
A1C11	0160-3443	1		CAPACITOR-FXD .1UF +80-20% 50VDC CER	28480	0160-3443
A1C12	0160-3443	1		CAPACITOR-FXD .1UF +80-20% 50VDC CER	28480	0160-3443
A1C13	0160-0168	1		CAPACITOR-FXD .1UF +-10% 200VDC POLYE	28480	0160-0168
A1C14	0160-0168	1		CAPACITOR-FXD .1UF +-10% 200VDC POLYE	28480	0160-0168
A1C15	0160-0168	1		CAPACITOR-FXD .1UF +-10% 200VDC POLYE	28480	0160-0168
A1C16	0160-3451	1		CAPACITOR-FXD .01UF +80-20% 100VDC CER	28480	0160-3451
A1C17	0160-0168	1		CAPACITOR-FXD .1UF +-10% 200VDC POLYE	28480	0160-0168
A1C18	0160-0168	1		CAPACITOR-FXD .1UF +-10% 200VDC POLYE	28480	0160-0168
A1C19	0160-0174	9		CAPACITOR-FXD .47UF +80-20% 25VDC CER	28480	0160-0174
A1C20	0140-0196	3	1	CAPACITOR-FXD 150PF +-5% 300VDC MICA	72136	DM15F151J0300WV1CR
A1C21	0160-0168	1		CAPACITOR-FXD .1UF +-10% 200VDC POLYE	28480	0160-0168
A1C22	0160-2254	0	1	CAPACITOR-FXD 7.5PF +-.25PF 500VDC CER	28480	0160-2254
A1C23	0160-3443	1		CAPACITOR-FXD .1UF +80-20% 50VDC CER	28480	0160-3443
A1C24	0160-3443	1		CAPACITOR-FXD .1UF +80-20% 50VDC CER	28480	0160-3443
A1C25	0160-3443	1		CAPACITOR-FXD .1UF +80-20% 50VDC CER	28480	0160-3443
A1CR1	1901-0376	6	4	DIODE-GEN PRP 35V 50MA DO-35	28480	1901-0376
A1CR2	1901-0376	6		DIODE-GEN PRP 35V 50MA DO-35	28480	1901-0376
A1CR3	1901-0376	6		DIODE-GEN PRP 35V 50MA DO-35	28480	1901-0376
A1CR4	1901-0376	6		DIODE-GEN PRP 35V 50MA DO-35	28480	1901-0376
A1CR5	1901-0033	2	8	DIODE-GEN PRP 180V 200MA DO-7	28480	1901-0033
A1CR6	1901-0033	2		DIODE-GEN PRP 180V 200MA DO-7	28480	1901-0033
A1CR7	1901-0033	2		DIODE-GEN PRP 180V 200MA DO-7	28480	1901-0033
A1CR8	1901-0033	2		DIODE-GEN PRP 180V 200MA DO-7	28480	1901-0033
A1CR9	1901-0040	1	7	DIODE-SWITCHING 30V 50MA 2NS DO-35	28480	1901-0040
A1CR10	1901-0040	1		DIODE-SWITCHING 30V 50MA 2NS DO-35	28480	1901-0040
A1CR11	1901-0040	1		DIODE-SWITCHING 30V 50MA 2NS DO-35	28480	1901-0040
A1CR12	1901-0040	1		DIODE-SWITCHING 30V 50MA 2NS DO-35	28480	1901-0040
A1CR13	1901-0033	2		DIODE-GEN PRP 180V 200MA DO-7	28480	1901-0033
A1CR14	1901-0033	2		DIODE-GEN PRP 180V 200MA DO-7	28480	1901-0033
A1CR15	1901-0033	2		DIODE-GEN PRP 180V 200MA DO-7	28480	1901-0033
A1CR16	1901-0033	2		DIODE-GEN PRP 180V 200MA DO-7	28480	1901-0033
A1CR17	1901-0040	1		DIODE-SWITCHING 30V 50MA 2NS DO-35	28480	1901-0040
A1CR18	1901-0040	1		DIODE-SWITCHING 30V 50MA 2NS DO-35	28480	1901-0040
A1CR20	1901-0513	3	4	DIODE-DUAL 100V	28480	1901-0513
A1CR21	1901-0513	3		DIODE-DUAL 100V	28480	1901-0513
A1CR22	1901-0513	3		DIODE-DUAL 100V	28480	1901-0513
A1CR23	1901-0513	3		DIODE-DUAL 100V	28480	1901-0513
A1CR24	1901-0040	1		DIODE-SWITCHING 30V 50MA 2NS DO-35	28480	1901-0040
A1L1	9100-2276	9	2	COIL-MLD 100UH 10% Q=50 .095DX.25LG=NOM	28480	9100-2276
A1L2	9100-2276	9		COIL-MLD 100UH 10% Q=50 .095DX.25LG=NOM	28480	9100-2276
A1Q1	1855-0262	0	1	TRANSISTOR-JFET DUAL N-CHAN D-MODE SI	28480	1855-0262
A1Q3	1853-0036	2	4	TRANSISTOR PNP SI PD=310MW FT=250MHZ	28480	1853-0036
A1Q4	1853-0036	2		TRANSISTOR PNP SI PD=310MW FT=250MHZ	28480	1853-0036
A1Q5	1854-0071	7	7	TRANSISTOR NPN SI PD=300MW FT=200MHZ	28480	1854-0071
A1Q6	1854-0071	7		TRANSISTOR NPN SI PD=300MW FT=200MHZ	28480	1854-0071
A1Q7	1854-0071	7		TRANSISTOR NPN SI PD=300MW FT=200MHZ	28480	1854-0071
A1Q8	1853-0316	1	1	TRANSISTOR-DUAL PNP PD=500MW	28480	1853-0316
A1Q9	1854-0071	7		TRANSISTOR NPN SI PD=300MW FT=200MHZ	28480	1854-0071
A1Q10	1854-0071	7		TRANSISTOR NPN SI PD=300MW FT=200MHZ	28480	1854-0071
A1Q11	1853-0276	2	3	TRANSISTOR PNP SI TO-52 PD=360MW	04713	MM3906
A1Q12	1853-0276	2		TRANSISTOR PNP SI TO-52 PD=360MW	04713	MM3906
A1Q13	1853-0276	2		TRANSISTOR PNP SI TO-52 PD=360MW	04713	MM3906
A1Q14	1853-0036	2		TRANSISTOR PNP SI PD=310MW FT=250MHZ	28480	1853-0036
A1Q15	1853-0036	2		TRANSISTOR PNP SI PD=310MW FT=250MHZ	28480	1853-0036
A1Q16	1854-0071	7		TRANSISTOR NPN SI PD=300MW FT=200MHZ	28480	1854-0071
A1Q17	1854-0071	7		TRANSISTOR NPN SI PD=300MW FT=200MHZ	28480	1854-0071
A1R1	0698-5965	5	1	RESISTOR 50 1% .5W F TC=0+-100	28480	0698-5965
A1R2	0687-4701	2	1	RESISTOR 47 10% .5W CC TC=0+412	01121	EB4701
A1R3	0757-0340	6	1	RESISTOR 10K 1% .25W F TC=0+-100	24546	CS-1/4-TO-1002-F
A1R4	0684-1041	1	2	RESISTOR 100K 10% .25W FC TC=-400/+800	01121	CB1041
A1R5	0684-1041	1		RESISTOR 100K 10% .25W FC TC=-400/+800	01121	CB1041

See introduction to this section for ordering information
*Indicates factory selected value

Table 6-2. Replaceable Parts (Cont'd)

Reference Designation	HP Part Number	CD	Qty	Description	Mfr Code	Mfr Part Number
A1R6	0684-3901	6	2	RESISTOR 39 10% .25W FC TC=-400/+500	01121	CB3901
A1R7	0684-3901	6		RESISTOR 39 10% .25W FC TC=-400/+500	01121	CB3901
A1R10	0757-0280	3	7	RESISTOR 1K 1% .125W F TC=0+-100	24546	C4-1/8-T0-1001-F
A1R11	2100-3352	7	2	RESISTOR-TRMR 1K 10% C SIDE-ADJ 1-TRN	28480	2100-3352
A1R12	2100-3352	7		RESISTOR-TRMR 1K 10% C SIDE-ADJ 1-TRN	28480	2100-3352
A1R13	0698-3447	4	1	RESISTOR 422 1% .125W F TC=0+-100	24546	C4-1/8-T0-422R-F
A1R14	0757-0283	6	1	RESISTOR 2K 1% .125W F TC=0+-100	24546	C4-1/8-T0-2001-F
A1R15	0757-0419	0	1	RESISTOR 681 1% .125W F TC=0+-100	24546	C4-1/8-T0-681R-F
A1R16	0757-0412	3	2	RESISTOR 365 1% .125W F TC=0+-100	24546	C4-1/8-T0-365R-F
A1R19	0757-0442	9	4	RESISTOR 10K 1% .125W F TC=0+-100	24546	C4-1/8-T0-1002-F
A1R22	0757-0442	9		RESISTOR 10K 1% .125W F TC=0+-100	24546	C4-1/8-T0-1002-F
A1R23	0757-0280	3		RESISTOR 1K 1% .125W F TC=0+-100	24546	C4-1/8-T0-1001-F
A1R24	0757-0417	8	2	RESISTOR 562 1% .125W F TC=0+-100	24546	C4-1/8-T0-562R-F
A1R25	0757-0417	8		RESISTOR 562 1% .125W F TC=0+-100	24546	C4-1/8-T0-562R-F
A1R26	0757-0394	0	2	RESISTOR 51.1 1% .125W F TC=0+-100	24546	C4-1/8-T0-51R1-F
A1R27	0757-0401	0	2	RESISTOR 100 1% .125W F TC=0+-100	24546	C4-1/8-T0-101-F
A1R28	0757-0442	9		RESISTOR 10K 1% .125W F TC=0+-100	24546	C4-1/8-T0-1002-F
A1R29	0757-0401	0		RESISTOR 100 1% .125W F TC=0+-100	24546	C4-1/8-T0-101-F
A1R31	0757-0394	0		RESISTOR 51.1 1% .125W F TC=0+-100	24546	C4-1/8-T0-51R1-F
A1R32	0698-0084	9	2	RESISTOR 2.15K 1% .125W F TC=0+-100	24546	C4-1/8-T0-2151-F
A1R33	0757-0408	7	2	RESISTOR 243 1% .125W F TC=0+-100	24546	C4-1/8-T0-243R-F
A1R34	0757-0273	4	1	RESISTOR 3.01K 1% .125W F TC=0+-100	24546	C4-1/8-T0-3011-F
A1R35	0757-0408	7		RESISTOR 243 1% .125W F TC=0+-100	24546	C4-1/8-T0-243R-F
A1R36	0757-0416	7	3	RESISTOR 511 1% .125W F TC=0+-100	24546	C4-1/8-T0-511R-F
A1R37	0757-0416	7		RESISTOR 511 1% .125W F TC=0+-100	24546	C4-1/8-T0-511R-F
A1R38	0757-0412	3		RESISTOR 365 1% .125W F TC=0+-100	24546	C4-1/8-T0-365R-F
A1R39	0684-5621	1	3	RESISTOR 5.6K 10% .25W FC TC=-400/+700	01121	CB5621
A1R40	0684-1531	4	2	RESISTOR 15K 10% .25W FC TC=-400/+800	01121	CB1531
A1R41	0757-0442	9		RESISTOR 10K 1% .125W F TC=0+-100	24546	C4-1/8-T0-1002-F
A1R42	0757-0415	6	2	RESISTOR 475 1% .125W F TC=0+-100	24546	C4-1/8-T0-475R-F
A1R43	0757-0415	6		RESISTOR 475 1% .125W F TC=0+-100	24546	C4-1/8-T0-475R-F
A1R44	0698-0085	0	1	RESISTOR 2.61K 1% .125W F TC=0+-100	24546	C4-1/8-T0-2611-F
A1R45	0757-0421	4	1	RESISTOR 825 1% .125W F TC=0+-100	24546	C4-1/8-T0-825R-F
A1R46	0757-0280	3		RESISTOR 1K 1% .125W F TC=0+-100	24546	C4-1/8-T0-1001-F
A1R47	0684-2201	7	5	RESISTOR 22 10% .25W FC TC=-400/+500	01121	CB2201
A1R48	0757-0280	3		RESISTOR 1K 1% .125W F TC=0+-100	24546	C4-1/8-T0-1001-F
A1R49	0757-0281	4	4	RESISTOR 2.74K 1% .125W F TC=0+-100	24546	C4-1/8-T0-2741-F
A1R50	0757-0416	7		RESISTOR 511 1% .125W F TC=0+-100	24546	C4-1/8-T0-511R-F
A1R51	0684-2201	7		RESISTOR 22 10% .25W FC TC=-400/+500	01121	CB2201
A1R52	0757-0280	3		RESISTOR 1K 1% .125W F TC=0+-100	24546	C4-1/8-T0-1001-F
A1R53	0757-0281	4		RESISTOR 2.74K 1% .125W F TC=0+-100	24546	C4-1/8-T0-2741-F
A1R54	0684-2201	7		RESISTOR 22 10% .25W FC TC=-400/+500	01121	CB2201
A1R55	0684-2201	7		RESISTOR 22 10% .25W FC TC=-400/+500	01121	CB2201
A1R56	0684-2221	1	2	RESISTOR 2.2K 10% .25W FC TC=-400/+700	01121	CB2221
A1R57	0684-1021	7	2	RESISTOR 1K 10% .25W FC TC=-400/+600	01121	CB1021
A1R58	0684-2221	1		RESISTOR 2.2K 10% .25W FC TC=-400/+700	01121	CB2221
A1R59	0684-1021	7		RESISTOR 1K 10% .25W FC TC=-400/+600	01121	CB1021
A1R60	0684-2201	7		RESISTOR 22 10% .25W FC TC=-400/+500	01121	CB2201
A1R61	0698-3150	6	1	RESISTOR 2.37K 1% .125W F TC=0+-100	24546	C4-1/8-T0-2371-F
A1R62	0684-5601	7	11	RESISTOR 56 10% .25W FC TC=-400/+500	01121	CB5601
A1R63	0684-5601	7		RESISTOR 56 10% .25W FC TC=-400/+500	01121	CB5601
A1R64	2100-3349	2	1	RESISTOR-TRMR 100 10% C SIDE-ADJ 1-TRN	28480	2100-3349
A1R65	0684-5601	7		RESISTOR 56 10% .25W FC TC=-400/+500	01121	CB5601
A1R66	0684-5621	1		RESISTOR 5.6K 10% .25W FC TC=-400/+700	01121	CB5621
A1R67	0684-5601	7		RESISTOR 56 10% .25W FC TC=-400/+500	01121	CB5601
A1R68	0757-0281	4		RESISTOR 2.74K 1% .125W F TC=0+-100	24546	C4-1/8-T0-2741-F
A1R69	0757-0280	3		RESISTOR 1K 1% .125W F TC=0+-100	24546	C4-1/8-T0-1001-F
A1R70	0757-0281	4		RESISTOR 2.74K 1% .125W F TC=0+-100	24546	C4-1/8-T0-2741-F
A1R71	0684-5621	1		RESISTOR 5.6K 10% .25W FC TC=-400/+700	01121	CB5621
A1R72	0684-5601	7		RESISTOR 56 10% .25W FC TC=-400/+500	01121	CB5601
A1R73	0684-5601	7		RESISTOR 56 10% .25W FC TC=-400/+500	01121	CB5601
A1R74	0698-3153	9	2	RESISTOR 3.83K 1% .125W F TC=0+-100	24546	C4-1/8-T0-3831-F
A1R75	0698-3153	9		RESISTOR 3.83K 1% .125W F TC=0+-100	24546	C4-1/8-T0-3831-F
A1R76	0684-1841	9	1	RESISTOR 180K 10% .25W FC TC=-800/+900	01121	CB1841
A1R77	0684-5601	7		RESISTOR 56 10% .25W FC TC=-400/+500	01121	CB5601
A1R78	0684-1051	3	1	RESISTOR 1M 10% .25W FC TC=-800/+900	01121	CB1051
A1R79	0684-2231	3	1	RESISTOR 22K 10% .25W FC TC=-400/+800	01121	CB2231
A1R80	0684-1531	4		RESISTOR 15K 10% .25W FC TC=-400/+800	01121	CB1531
A1R81	0684-5601	7		RESISTOR 56 10% .25W FC TC=-400/+500	01121	CB5601
A1R82	0757-0284	7	2	RESISTOR 150 1% .125W F TC=0+-100	24546	C4-1/8-T0-151-F
A1R83	0757-0469	9	1	RESISTOR 150K 1% .125W F TC=0+-100	24546	C4-1/8-T0-1503-F
A1R84	0757-0284	7		RESISTOR 150 1% .125W F TC=0+-100	24546	C4-1/8-T0-151-F
A1R85	0684-5601	7		RESISTOR 56 10% .25W FC TC=-400/+500	01121	CB5601
A1R86	0757-0407	6	1	RESISTOR 200 1% .125W F TC=0+-100	24546	C4-1/8-T0-201-F
A1R87	0757-0280	3		RESISTOR 1K 1% .125W F TC=0+-100	24546	C4-1/8-T0-1001-F

See introduction to this section for ordering information
*Indicates factory selected value

Table 6-2. Replaceable Parts (Cont'd)

Reference Designation	HP Part Number	C D	Qty	Description	Mfr Code	Mfr Part Number
A1R88	0698-0084	9		RESISTOR 2.15K 1% .125W F TC=0+-100	24546	C4-1/8-T0-2151-F
A1R89	0684-5601	7		RESISTOR 56 10% .25W FC TC=-400/+500	01121	CB5601
A1R90	0684-5601	7		RESISTOR 56 10% .25W FC TC=-400/+500	01121	CB5601
A1R91	0757-0441	8	1	RESISTOR 8.25K 1% .125W F TC=0+-100	24546	C4-1/8-T0-8251-F
A1S1	3101-0973	5	1	SWITCH-SL DPDT MINTR .5A 125VAC/DC PC	28480	3101-0973
A1U1	1820-0352	6	1	TRANSISTOR ARRAY	01928	CA3018
A1U2	1858-0040	8	1	TRANSISTOR ARRAY	01928	CA3127E
A1VR1	1902-3139	7	1	DIODE-ZNR 8.25V 5% DO-7 PD=.4W TC=+.053%	28480	1902-3139

See introduction to this section for ordering information
*Indicates factory selected value

Table 6-2. Replaceable Parts (Cont'd)

Reference Designation	HP Part Number	C D	Qty	Description	Mfr Code	Mfr Part Number
A4	01310-66530	2	1	PC BOARD ASSEMBLY-OUTPUT AMPLIFIER	28480	01310-66530
A4C1	0160-3451	1	8	CAPACITOR-FXD .01UF +80-20% 100VDC CER	28480	0160-3451
A4C2	0160-3451	1		CAPACITOR-FXD .01UF +80-20% 100VDC CER	28480	0160-3451
A4C3	0160-2150	5	2	CAPACITOR-FXD 33PF +-5% 300VDC MICA	28480	0160-2150
A4C4	0160-3451	1		CAPACITOR-FXD .01UF +80-20% 100VDC CER	28480	0160-3451
A4C5	0160-3451	1		CAPACITOR-FXD .01UF +80-20% 100VDC CER	28480	0160-3451
A4C6	0170-0063	6	2	CAPACITOR-FXD .02UF +-10% 400VDC POLYE	84411	663UW20394
A4C7	0160-3451	1		CAPACITOR-FXD .01UF +80-20% 100VDC CER	28480	0160-3451
A4C8	0121-0407	9	2	CAPACITOR-V TRMR-PSTN .7-3PF 600V	72982	536-016
A4C9	0170-0022	7	3	CAPACITOR-FXD .1UF +-20% 600VDC POLYE	28480	0170-0022
A4C11	0160-2150	5		CAPACITOR-FXD 33PF +-5% 300VDC MICA	28480	0160-2150
A4C12	0121-0407	9		CAPACITOR-V TRMR-PSTN .7-3PF 600V	72982	536-016
A4C13	0160-3451	1		CAPACITOR-FXD .01UF +80-20% 100VDC CER	28480	0160-3451
A4C14	0160-3451	1		CAPACITOR-FXD .01UF +80-20% 100VDC CER	28480	0160-3451
A4C15	0170-0063	6		CAPACITOR-FXD .02UF +-10% 400VDC POLYE	84411	663UW20394
A4C16	0160-3451	1		CAPACITOR-FXD .01UF +80-20% 100VDC CER	28480	0160-3451
A4C17	0121-0474	0	1	CAPACITOR-V TRMR-PSTN 0.25-1.5PF 600V	28480	0121-0474
A4C18	0170-0022	7		CAPACITOR-FXD .1UF +-20% 600VDC POLYE	28480	0170-0022
A4C19	0170-0022	7		CAPACITOR-FXD .1UF +-20% 600VDC POLYE	28480	0170-0022
A4C20	0180-0374	3	2	CAPACITOR-FXD 10UF+-10% 20VDC TA	56289	150D106X9020B2
A4C21	0180-0374	3		CAPACITOR-FXD 10UF+-10% 20VDC TA	56289	150D106X9020B2
A4C22	0160-3443	1	2	CAPACITOR-FXD .1UF +80-20% 50VDC CER	28480	0160-3443
A4C23	0160-3443	1		CAPACITOR-FXD .1UF +80-20% 50VDC CER	28480	0160-3443
A4CR1	1901-0033	2	4	DIODE-GEN PRP 180V 200MA DO-7	28480	1901-0033
A4CR2	1901-0033	2		DIODE-GEN PRP 180V 200MA DO-7	28480	1901-0033
A4CR3	1901-0033	2		DIODE-GEN PRP 180V 200MA DO-7	28480	1901-0033
A4CR4	1901-0033	2		DIODE-GEN PRP 180V 200MA DO-7	28480	1901-0033
A4CR5	1901-0040	1	12	DIODE-SWITCHING 30V 50MA 2NS DO-35	28480	1901-0040
A4CR6	1901-0040	1		DIODE-SWITCHING 30V 50MA 2NS DO-35	28480	1901-0040
A4CR7	1901-0040	1		DIODE-SWITCHING 30V 50MA 2NS DO-35	28480	1901-0040
A4CR8	1901-0040	1		DIODE-SWITCHING 30V 50MA 2NS DO-35	28480	1901-0040
A4CR9	1901-0040	1		DIODE-SWITCHING 30V 50MA 2NS DO-35	28480	1901-0040
A4CR10	1901-0040	1		DIODE-SWITCHING 30V 50MA 2NS DO-35	28480	1901-0040
A4CR11	1901-0040	1		DIODE-SWITCHING 30V 50MA 2NS DO-35	28480	1901-0040
A4CR12	1901-0040	1		DIODE-SWITCHING 30V 50MA 2NS DO-35	28480	1901-0040
A4CR13	1901-0040	1		DIODE-SWITCHING 30V 50MA 2NS DO-35	28480	1901-0040
A4CR14	1901-0040	1		DIODE-SWITCHING 30V 50MA 2NS DO-35	28480	1901-0040
A4CR15	1901-0040	1		DIODE-SWITCHING 30V 50MA 2NS DO-35	28480	1901-0040
A4CR16	1901-0040	1		DIODE-SWITCHING 30V 50MA 2NS DO-35	28480	1901-0040
A4Q1	1853-0036	2	4	TRANSISTOR PNP SI PD=310MW FT=250MHZ	28480	1853-0036
A4Q2	1853-0036	2		TRANSISTOR PNP SI PD=310MW FT=250MHZ	28480	1853-0036
A4Q4	1853-0036	2		TRANSISTOR PNP SI PD=310MW FT=250MHZ	28480	1853-0036
A4Q5	1854-0215	1	2	TRANSISTOR NPN SI PD=350MW FT=300MHZ	04713	2N3904
A4Q6	1853-0038	4	4	TRANSISTOR PNP SI TO-39 PD=1W FT=100MHZ	28480	1853-0038
A4Q7	1853-0038	4		TRANSISTOR PNP SI TO-39 PD=1W FT=100MHZ	28480	1853-0038
A4Q8	1854-0271	9	2	TRANSISTOR NPN SI TO-39 PD=1W FT=150MHZ	28480	1854-0271
A4Q9	1854-0523	4	2	TRANSISTOR NPN SI TO-39 PD=1W FT=150MHZ	28480	1854-0523
A4Q10	1854-0215	1		TRANSISTOR NPN SI PD=350MW FT=300MHZ	04713	2N3904
A4Q11	1853-0036	2		TRANSISTOR PNP SI PD=310MW FT=250MHZ	28480	1853-0036
A4Q12	1854-0271	9		TRANSISTOR NPN SI TO-39 PD=1W FT=150MHZ	28480	1854-0271
A4Q13	1854-0523	4		TRANSISTOR NPN SI TO-39 PD=1W FT=150MHZ	28480	1854-0523
A4Q14	1853-0038	4		TRANSISTOR PNP SI TO-39 PD=1W FT=100MHZ	28480	1853-0038
A4Q15	1853-0038	4		TRANSISTOR PNP SI TO-39 PD=1W FT=100MHZ	28480	1853-0038
A4R1	0684-4701	6	4	RESISTOR 47 10% .25W FC TC=-400/+500	01121	CB4701
A4R2	0684-4701	6		RESISTOR 47 10% .25W FC TC=-400/+500	01121	CB4701
A4R3	0684-5601	7	2	RESISTOR 56 10% .25W FC TC=-400/+500	01121	CB5601
A4R4	0684-5601	7		RESISTOR 56 10% .25W FC TC=-400/+500	01121	CB5601
A4R5	0698-3153	9	1	RESISTOR 3.83K 1% .125W F TC=0+-100	24546	C4-1/8-T0-3831-F
A4R6	0757-0280	3	1	RESISTOR 1K 1% .125W F TC=0+-100	24546	C4-1/8-T0-1001-F
A4R7	0698-0085	0	2	RESISTOR 2.61K 1% .125W F TC=0+-100	24546	C4-1/8-T0-2611-F
A4R8	0757-0278	9	2	RESISTOR 1.78K 1% .125W F TC=0+-100	24546	C4-1/8-T0-1781-F
A4R9	0698-3159	5	2	RESISTOR 26.1K 1% .125W F TC=0+-100	24546	C4-1/8-T0-2612-F
A4R10	0684-1811	3	5	RESISTOR 180 10% .25W FC TC=-400/+600	01121	CB1811
A4R11	0684-2711	4	2	RESISTOR 270 10% .25W FC TC=-400/+600	01121	CB2711
A4R12	0698-0085	0		RESISTOR 2.61K 1% .125W F TC=0+-100	24546	C4-1/8-T0-2611-F
A4R13	0757-0278	9		RESISTOR 1.78K 1% .125W F TC=0+-100	24546	C4-1/8-T0-1781-F
A4R14	0698-3159	5		RESISTOR 26.1K 1% .125W F TC=0+-100	24546	C4-1/8-T0-2612-F
A4R15	0684-2711	4		RESISTOR 270 10% .25W FC TC=-400/+600	01121	CB2711
A4R16	0684-1811	3		RESISTOR 180 10% .25W FC TC=-400/+600	01121	CB1811
A4R17	0684-1001	3	2	RESISTOR 10 10% .25W FC TC=-400/+500	01121	CB1001
A4R18	0698-3635	6	2	RESISTOR 56K 5% 2W MO TC=0+-200	27167	FP42-2-T00-5602-J
A4R19	0698-3155	1	2	RESISTOR 4.64K 1% .125W F TC=0+-100	24546	C4-1/8-T0-4641-F
A4R20	0757-0159	5	2	RESISTOR 1K 1% .5W F TC=0+-100	28480	0757-0159

See introduction to this section for ordering information
*Indicates factory selected value

Table 6-2. Replaceable Parts (Cont'd)

Reference Designation	HP Part Number	CD	Qty	Description	Mfr Code	Mfr Part Number
A4R21	0764-0021	5	4	RESISTOR 9.1K 5% 2W MO TC=0+-200	28480	0764-0021
A4R22	0764-0021	5		RESISTOR 9.1K 5% 2W MO TC=0+-200	28480	0764-0021
A4R23	0684-1021	7	2	RESISTOR 1K 10% .25W FC TC=-400/+600	01121	CB1021
A4R24	2100-2692	6	1	RESISTOR-TRMR 1M 20% C SIDE=ADJ 1-TRN	30983	ET50X105
A4R25	0757-0438	3	2	RESISTOR 5.11K 1% .125W F TC=0+-100	24546	C4-1/8-T0-5111-F
A4R26	0684-4701	6		RESISTOR 47 10% .25W FC TC=-400/+500	01121	CB4701
A4R27	0761-0076	4	2	RESISTOR 18K 5% 1W MO TC=0+-200	28480	0761-0076
A4R28	0761-0074	2	2	RESISTOR 15K 5% 1W MO TC=0+-200	28480	0761-0074
A4R29	0698-3646	5	4	RESISTOR 12K 5% 2W MO TC=0+-200	27167	FP42-2-T00-1202-J
A4R30	0698-3646	5		RESISTOR 12K 5% 2W MO TC=0+-200	27167	FP42-2-T00-1202-J
A4R31	0757-0480	5	1	RESISTOR 432K 1% .125W F TC=0+-100	19701	MF4C1/8-T0-4323-F
A4R32	0698-3646	5		RESISTOR 12K 5% 2W MO TC=0+-200	27167	FP42-2-T00-1202-J
A4R33	0684-1811	3		RESISTOR 180 10% .25W FC TC=-400/+600	01121	CB1811
A4R34	0698-3646	5		RESISTOR 12K 5% 2W MO TC=0+-200	27167	FP42-2-T00-1202-J
A4R35	0757-0438	3		RESISTOR 5.11K 1% .125W F TC=0+-100	24546	C4-1/8-T0-5111-F
A4R36	0684-4701	6		RESISTOR 47 10% .25W FC TC=-400/+500	01121	CB4701
A4R37	0684-1001	3		RESISTOR 10 10% .25W FC TC=-400/+500	01121	CB1001
A4R38	0698-3655	6		RESISTOR 56K 5% 2W MO TC=0+-200	27167	FP42-2-T00-5602-J
A4R39	0684-1811	3		RESISTOR 180 10% .25W FC TC=-400/+600	01121	CB1811
A4R40	0698-3155	1		RESISTOR 4.64K 1% .125W F TC=0+-100	24546	C4-1/8-T0-4641-F
A4R41	0757-0159	5		RESISTOR 1K 1% .5W F TC=0+-100	28480	0757-0159
A4R42	0761-0074	2		RESISTOR 15K 5% 1W MO TC=0+-200	28480	0761-0074
A4R43	0761-0076	4		RESISTOR 18K 5% 1W MO TC=0+-200	28480	0761-0076
A4R44	0764-0021	5		RESISTOR 9.1K 5% 2W MO TC=0+-200	28480	0764-0021
A4R45	0764-0021	5		RESISTOR 9.1K 5% 2W MO TC=0+-200	28480	0764-0021
A4R46	0684-1021	7		RESISTOR 1K 10% .25W FC TC=-400/+600	01121	CB1021
A4R47	0684-1811	3		RESISTOR 180 10% .25W FC TC=-400/+600	01121	CB1811
				MISCELLANEOUS PARTS		
	1200-0185	9	8	INSULATOR-XSTR NYLON	28480	1200-0185
	1205-0073	4	8	HEAT SINK TO-5/TO-39-CS	28480	1205-0073

See introduction to this section for ordering information
*Indicates factory selected value

PART NUMBER 9320-3991

Table 6-2. Replaceable Parts (Cont'd)

Reference Designation	HP Part Number	C D	Qty	Description	Mfr Code	Mfr Part Number
A9	01311-66502	9	1	Z-AXIS BOARD ASSEMBLY	28480	01311-66502
A9C1	0160-2055	9	16	CAPACITOR-FXD .01UF +80-20% 100VDC CER	28480	0160-2055
A9C2	0160-2055	9		CAPACITOR-FXD .01UF +80-20% 100VDC CER	28480	0160-2055
A9C3	0160-2243	7	4	CAPACITOR-FXD 2.7PF +-.25PF 500VDC CER	28480	0160-2243
A9C4	0160-2055	9		CAPACITOR-FXD .01UF +80-20% 100VDC CER	28480	0160-2055
A9C5	0160-3508	9	4	CAPACITOR-FXD 1UF +80-20% 50VDC CER	28480	0160-3508
A9C6	0160-3508	9		CAPACITOR-FXD 1UF +80-20% 50VDC CER	28480	0160-3508
A9C7	0160-2243	7		CAPACITOR-FXD 2.7PF +-.25PF 500VDC CER	28480	0160-2243
A9C8	0160-2055	9		CAPACITOR-FXD .01UF +80-20% 100VDC CER	28480	0160-2055
A9C9	0160-2055	9		CAPACITOR-FXD .01UF +80-20% 100VDC CER	28480	0160-2055
A9C10	0160-3443	1	5	CAPACITOR-FXD .1UF +80-20% 50VDC CER	28480	0160-3443
A9C11	0160-2055	9		CAPACITOR-FXD .01UF +80-20% 100VDC CER	28480	0160-2055
A9C12	0160-2243	7		CAPACITOR-FXD 2.7PF +-.25PF 500VDC CER	28480	0160-2243
A9C13	0160-2243	7		CAPACITOR-FXD 2.7PF +-.25PF 500VDC CER	28480	0160-2243
A9C14	0160-2055	9		CAPACITOR-FXD .01UF +80-20% 100VDC CER	28480	0160-2055
A9C15	0160-2055	9		CAPACITOR-FXD .01UF +80-20% 100VDC CER	28480	0160-2055
A9C16	0140-0203	3	2	CAPACITOR-FXD 30PF +-5% 500VDC MICA	72136	DM15E300J0500MV1CR
A9C17	0140-0203	3		CAPACITOR-FXD 30PF +-5% 500VDC MICA	72136	DM15E300J0500MV1CR
A9C18	0160-2055	9		CAPACITOR-FXD .01UF +80-20% 100VDC CER	28480	0160-2055
A9C19	0160-2055	9		CAPACITOR-FXD .01UF +80-20% 100VDC CER	28480	0160-2055
A9C20	0160-2055	9		CAPACITOR-FXD .01UF +80-20% 100VDC CER	28480	0160-2055
A9C21	0160-2055	9		CAPACITOR-FXD .01UF +80 -20% 100VDC CER	28480	0160-2055
A9C22	0160-4908	5	3	CAPACITOR-FXD .68UF +-10% 250VDC	28480	0160-4908
A9C23	0160-3460	2	2	CAPACITOR-FXD .05UF +80-20% 100VDC CER	28480	0160-3460
A9C24	0160-3460	2		CAPACITOR-FXD .05UF +80-20% 100VDC CER	28480	0160-3460
A9C25	0160-4908	5		CAPACITOR-FXD .68UF +-10% 250VDC	28480	0160-4908
A9C26	0160-4908	5			28480	0160-4908
A9C27	0121-0474	0	1	CAPACITOR-FXD 68UF +-10% 250VDC	28480	0121-0474
A9C28	0160-3960	7	1	CAPACITOR-FXD .68UF +-10% 250VDC	28480	0160-3960
A9C29	0160-2055	9		CAPACITOR-V TRMR-PSTN 0.25 - 1.25PF 600V	28480	0160-2055
A9C30	0160-3443	1		CAPACITOR-FXD .1UF +80-20% 50VDC CER	28480	0160-3443
A9C31	0180-0374	3	2	CAPACITOR-FXD 10UF+-10% 20VDC TA	56289	150D106X902082
A9C32	0160-3443	1		CAPACITOR-FXD .1UF +80-20% 50VDC CER	28480	0160-3443
A9C33	0180-0374	3		CAPACITOR-FXD 10UF+-10% 20VDC TA	56289	150D106X902082
A9C34	0160-3443	1		CAPACITOR-FXD .1UF +80-20% 50VDC CER	28480	0160-3443
A9C35	0160-3508	9		CAPACITOR-FXD 1UF +80-20% 50VDC CER	28480	0160-3508
A9C36	0160-3508	9		CAPACITOR-FXD 1UF +80-20% 50VDC CER	28480	0160-3508
A9C37	0160-3443	1		CAPACITOR-FXD .1UF +80-20% 50VDC CER	28480	0160-3443
A9C38	0160-2055	9		CAPACITOR-FXD .01UF +80-20% 100VDC CER	28480	0160-2055
A9C39	0160-2055	9		CAPACITOR-FXD .01UF +80-20% 100VDC CER	28480	0160-2055
A9C41	0160-2055	9		CAPACITOR-FXD .01UF +80-20% 100VDC CER	28480	0160-2055
A9CR1	1901-0376	6	4	DIODE-GEN PRP 35V 50MA DO-35	28480	1901-0376
A9CR2	1901-0376	6		DIODE-GEN PRP 35V 50MA DO-35	28480	1901-0376
A9CR3	1901-0376	6		DIODE-GEN PRP 35V 50MA DO-35	28480	1901-0376
A9CR4	1901-0376	6		DIODE-GEN PRP 35V 50MA DO-35	28480	1901-0376
A9CR5	1906-0042	3	1	DIODE-DUAL 70V VF DIFF=10MV	28480	1906-0042
A9CR6	1901-0040	1	3	DIODE-SWITCHING 30V 50MA 2NS DO-35	28480	1901-0040
A9CR7	1901-0045	6	2	DIODE-PWR RECT 100V 750MA DO-29	28480	1901-0045
A9CR8	1901-0045	6		DIODE-PWR RECT 100V 750MA DO-29	28480	1901-0045
A9CR9	1901-0040	1		DIODE-SWITCHING 30V 50MA 2NS DO-35	28480	1901-0040
A9CR10	1901-0040	1		DIODE-SWITCHING 30V 50MA 2NS DO-35	28480	1901-0040
A9CR11	1901-0050	3	2	DIODE-SWITCHING 60V 200MA 2NS DO-35	28480	1901-0050
A9CR12	1901-0050	3		DIODE-SWITCHING 60V 200MA 2NS DO-35	28480	1901-0050
	1251-0206	2	2	CONNECTOR-SGL CONT SKT .04-IN-BSC-BZ RND	28480	1251-0206
A9L1	9140-0210	1	2	COIL-MLD 100UH 5% Q=50 .155DX.375LG-NOM	28480	9140-0210
A9L2	9140-0210	1		COIL-MLD 100UH 5% Q=50 .155DX.375LG-NOM	28480	9140-0210
A9MP1	1205-0213	4	1	HEAT SINK SGL TO-5/TO-39-CS	28480	1205-0213
A9MP2	1205-0235	0	1	HEAT SINK SGL TO-18-CS	28480	1205-0235
A9MP3	01300-21102	8	1	HEAT SINK-CLAMP	28480	01300-21102
A9MP4	01300-21103	9	1	HEAT SINK-BASE	28480	01300-21103
A9MP5	1205-0226	9	1	HEAT SINK SGL TO-5/TO-39-CS	28480	1205-0226
A9Q1	1855-0262	0	1	TRANSISTOR-JFET DUAL N-CHAN D-MODE SI	28480	1855-0262
A9Q2	1853-0316	1	2	TRANSISTOR-DUAL PNP PD=500MW	28480	1853-0316
A9Q3	1854-0280	0	1	TRANSISTOR-DUAL NPN PD=400MW	28480	1854-0280
A9Q5	1854-0260	6	1	TRANSISTOR NPN 2N3227 SI TO-18 PD=360MW	04713	2N3227
A9Q6	1853-0089	5	1	TRANSISTOR PNP 2N4917 SI PD=200MW	07263	2N4917
A9Q7	1853-0232	0	1	TRANSISTOR PNP SI TO-39 PD=1W FT=200MHZ	28480	1853-0232
A9Q8	1854-0419	7	2	TRANSISTOR NPN SI TO-39 PD=1W FT=200MHZ	28480	1854-0419
A9Q9	1853-0316	1		TRANSISTOR-DUAL PNP PD=500MW	28480	1853-0316
A9Q10	1854-0221	9	1	TRANSISTOR-DUAL NPN PD=750MW	28480	1854-0221
A9Q11	1854-0419	7		TRANSISTOR NPN SI TO-39 PD=1W FT=200MHZ	28480	1854-0419

See introduction to this section for ordering information
*Indicates factory selected value

Table 6-2. Replaceable Parts (Cont'd)

Reference Designation	HP Part Number	C D	Qty	Description	Mfr Code	Mfr Part Number
A5R1	0757-0442	9	4	RESISTOR 10K 1% .125W F TC=0+-100	24546	C4-1/8-T0-1002-F
A5R2	0698-7648	5	1	RESISTOR 50 1% .25W MO TC=0+-100	28480	0698-7648
A5R3	0757-0391	7	4	RESISTOR 39.2 1% .125W F TC=0+-100	24546	C4-1/8-T0-39R2-F
A5R4	0757-0391	7		RESISTOR 39.2 1% .125W F TC=0+-100	24546	C4-1/8-T0-39R2-F
A5R5	0757-0288	1	2	RESISTOR 9.09K 1% .125W F TC=0+-100	19701	MF4C1/8-T0-9091-F
A5R6	0757-0288	1		RESISTOR 9.09K 1% .125W F TC=0+-100	19701	MF4C1/8-T0-9091-F
A5R7	0757-0415	6	2	RESISTOR 475 1% .125W F TC=0+-100	24546	C4-1/8-T0-475R-F
A5R8	0757-0415	6		RESISTOR 475 1% .125W F TC=0+-100	24546	C4-1/8-T0-475R-F
A5R9	0757-0431	6	1	RESISTOR 2.43K 1% .125W F TC=0+-100	24546	C4-1/8-T0-2431-F
A5R10	0757-0418	9	1	RESISTOR 619 1% .125W F TC=0+-100	24546	C4-1/8-T0-619R-F
A5R11	0757-0434	9	1	RESISTOR 3.65K 1% .125W F TC=0+-100	24546	C4-1/8-T0-3651-F
A5R12	0698-3150	6	1	RESISTOR 2.37K 1% .125W F TC=0+-100	24546	C4-1/8-T0-2371-F
A5R13	2100-3353	8	1	RESISTOR-TRMR 20K 10% C SIDE-ADJ 1-TRN	32997	3386X-V46-203
A5R14	2100-3352	7	1	RESISTOR-TRMR 1K 10% C SIDE-ADJ 1-TRN	28480	2100-3352
A5R15	0757-0442	9		RESISTOR 10K 1% .125W F TC=0+-100	24546	C4-1/8-T0-1002-F
A5R16	0757-0416	7	1	RESISTOR 511 1% .125W F TC=0+-100	24546	C4-1/8-T0-511R-F
A5R17	0757-0719	3	1	RESISTOR 221 1% .25W F TC=0+-100	24546	C5-1/4-T0-221R-F
A5R18	0757-0720	6	1	RESISTOR 243 1% .25W F TC=0+-100	24546	C5-1/4-T0-243R-F
A5R19	2100-3426	6	1	RESISTOR-TRMR 20 10% C SIDE-ADJ 1-TRN	28480	2100-3426
A5R20	0757-0338	2	2	RESISTOR 1K 1% .25W F TC=0+-100	24546	C5-1/4-T0-1001-F
A5R21	0757-0338	2		RESISTOR 1K 1% .25W F TC=0+-100	24546	C5-1/4-T0-1001-F
A5R22	0698-3132	4	1	RESISTOR 261 1% .125W F TC=0+-100	24546	C4-1/8-T0-2610-F
A5R23	0757-0411	2	2	RESISTOR 332 1% .125W F TC=0+-100	24546	C4-1/8-T0-332R-F
A5R24	0757-0411	2		RESISTOR 332 1% .125W F TC=0+-100	24546	C4-1/8-T0-332R-F
A5R25	0698-3431	6	4	RESISTOR 23.7 1% .125W F TC=0+-100	03888	PME55-1/8-T0-23R7-F
A5R26	0698-3431	6		RESISTOR 23.7 1% .125W F TC=0+-100	03888	PME55-1/8-T0-23R7-F
A5R27	0757-0274	5	1	RESISTOR 1.21K 1% .125W F TC=0+-100	24546	C4-1/8-T0-1213-F
A5R28	0757-0408	7	3	RESISTOR 243 1% .125W F TC=0+-100	24546	C4-1/8-T0-243R-F
A5R29	0757-0408	7		RESISTOR 243 1% .125W F TC=0+-100	24546	C4-1/8-T0-243R-F
A5R30	0757-0403	2	2	RESISTOR 121 1% .125W F TC=0+-100	24546	C4-1/8-T0-121R-F
A5R31	0757-0403	2		RESISTOR 121 1% .125W F TC=0+-100	24546	C4-1/8-T0-121R-F
A5R32	0757-0442	9		RESISTOR 10K 1% .125W F TC=0+-100	24546	C4-1/8-T0-1002-F
A5R33	0757-0442	9		RESISTOR 10K 1% .125W F TC=0+-100	24546	C4-1/8-T0-1002-F
A5R34	0757-0443	7	1	RESISTOR 11K 1% .125W F TC=0+-100	28480	0757-0443
A5R35	0757-0441	8	1	RESISTOR 8.25K 1% .125W F TC=0+-100	24546	C4-1/8-T0-8251-F
A5R36	2100-2574	3	1	RESISTOR-TRMR 500 10% C SIDE-ADJ 1-TRN	30983	ET50X501
A5R37	0757-0449	6	1	RESISTOR 20K 1% .125W F TC=0+-100	24546	C4-1/8-T0-2002-F
A5R40	0757-0391	7		RESISTOR 39.2 1% .125W F TC=0+-100	24546	C4-1/8-T0-39R2-F
A5R41	0757-0391	7		RESISTOR 39.2 1% .125W F TC=0+-100	24546	C4-1/8-T0-39R2-F
A5R42	0757-0725	1	2	RESISTOR 475 1% .25W F TC=0+-100	24546	C5-1/4-T0-475R-F
A5R43	0757-0730	8	2	RESISTOR 750 1% .25W F TC=0+-100	24546	C5-1/4-T0-751-F
A5R44	0757-0730	8		RESISTOR 750 1% .25W F TC=0+-100	24546	C5-1/4-T0-751-F
A5R45	0757-0725	1		RESISTOR 475 1% .25W F TC=0+-100	24546	C5-1/4-T0-475R-F
A5R46	0757-0845	6	1	RESISTOR 16.2K 1% .5W F TC=0+-100	28480	0757-0845
A5R47	0698-3417	8	1	RESISTOR 23.7K 1% .5W F TC=0+-100	28480	0698-3417
A5R48	0698-3431	6		RESISTOR 23.7 1% .125W F TC=0+-100	03888	PME55-1/8-T0-23R7-F
A5R49	0698-3431	6		RESISTOR 23.7 1% .125W F TC=0+-100	03888	PME55-1/8-T0-23R7-F
A5R50	0761-0076	4	2	RESISTOR 18K 5% 1W MO TC=0+-200	28480	0761-0076
A5R51	0761-0076	4		RESISTOR 18K 5% 1W MO TC=0+-200	28480	0761-0076
A5R52	0761-0016	2	1	RESISTOR 7.5K 5% 1W MO TC=0+-200	28480	0761-0016
A5R53	0687-4721	6	1	RESISTOR 4.7K 10% .5W CC TC=0+647	01121	EB4721
A5R54	0687-1051	9	1	RESISTOR 1M 10% .5W CC TC=0+1000	01121	EB1051
A5R55	0757-0465	6	3	RESISTOR 100K 1% .125W F TC=0+-100	24546	C4-1/8-T0-1003-F
A5R56	0757-0280	3	3	RESISTOR 1K 1% .125W F TC=0+-100	24546	C4-1/8-T0-1001-F
A5R57	0757-0408	7		RESISTOR 243 1% .125W F TC=0+-100	24546	C4-1/8-T0-243R-F
A5R58	0757-0461	2	1	RESISTOR 68.1K 1% .125W F TC=0+-100	24546	C4-1/8-T0-6812-F
A5R59	0757-0283	6	1	RESISTOR 2K 1% .125W F TC=0+-100	24546	C4-1/8-T0-2001-F
A5R60	0757-0465	6		RESISTOR 100K 1% .125W F TC=0+-100	24546	C4-1/8-T0-1003-F
A5R61	0757-0473	6	2	RESISTOR 221K 1% .125W F TC=0+-100	24546	C4-1/8-T0-2213-F
A5R62	0757-0280	3		RESISTOR 1K 1% .125W F TC=0+-100	24546	C4-1/8-T0-1001-F
A5R63	0757-0465	6		RESISTOR 100K 1% .125W F TC=0+-100	24546	C4-1/8-T0-1003-F
A5R64	0757-0473	6		RESISTOR 221K 1% .125W F TC=0+-100	24546	C4-1/8-T0-2213-F
A5R65	0687-2711	0	1	RESISTOR 270 10% .5W CC TC=0+529	01121	EB2711
A5R66	0757-0280	3		RESISTOR 1K 1% .125W F TC=0+-100	24546	C4-1/8-T0-1001-F
A5S1	3101-1341	3	1	SWITCH-SL SPDT SUBMIN .5A 125VAC/DC	28480	3101-1341
A5U1	1820-0427	6	1	IC MODULATOR TO-100	04713	MC14466
A5U2	1820-0352	6	1	TRANSISTOR ARRAY	01928	CA3018
A5U3	1820-0681	4	1	IC GATE TTL 8 NAND QUAD 2-INP	01295	SN74800N
A5V1	2140-0008	8	7	LAMP-GLOW NIA 115/59VDC 500UA T-2-BULB	28480	2140-0008
A5V2	2140-0008	8		LAMP-GLOW NIA 115/59VDC 500UA T-2-BULB	28480	2140-0008
A5V3	2140-0008	8		LAMP-GLOW NIA 115/59VDC 500UA T-2-BULB	28480	2140-0008
A5V4	2140-0008	8		LAMP-GLOW NIA 115/59VDC 500UA T-2-BULB	28480	2140-0008
A5V5	2140-0008	8		LAMP-GLOW NIA 115/59VDC 500UA T-2-BULB	28480	2140-0008

See introduction to this section for ordering information
*Indicates factory selected value

PART NUMBER 9320-3991

Table 6-2. Replaceable Parts (Cont'd)

Reference Designation	HP Part Number	C D	Qty	Description	Mfr Code	Mfr Part Number
A5V6	2140-0008	8		LAMP-GLOW A1A 115/59VDC 500UA T-2-BULB	28480	2140-0008
A5V7	2140-0008	8		LAMP-GLOW A1A 115/59VDC 500UA T-2-BULB	28480	2140-0008
A5VR1	1902-3139	7	1	DIODE-ZNR 8.25V 5% DO-7 PD=.4W TC=+.053%	28480	1902-3139
A5VR2	1902-3149	9	1	DIODE-ZNR 9.09V 5% DO-7 PD=.4W TC=+.057%	28480	1902-3149
A5VR3	1902-0184	6	1	DIODE-ZNR 10.2V 5% DO-7 PD=.4W TC=+.066%	28480	1902-0184
A5VR4	1902-0041	4	2	DIODE-ZNR 5.11V 5% DO-7 PD=.4W TC=-.009%	28480	1902-0041
A5VR5	1902-0041	4		DIODE-ZNR 5.11V 5% DO-7 PD=.4W TC=-.009%	28480	1902-0041

See introduction to this section for ordering information
*Indicates factory selected value

Table 6-2. Replaceable Parts (Cont'd)

Reference Designation	HP Part Number	C D	Qty	Description	Mfr Code	Mfr Part Number
A6	01317-66501	M	1	PC BOARD ASSEMBLY-FOCUS	28480	01317-66501
A6C1	0160-3443	1	7	CAPACITOR-FXD .1UF +80-20% 50VDC CER	28480	0160-3443
A6C2	0140-0203	3	1	CAPACITOR-FXD 30PF +-5% 500VDC MICA	72136	DM15E300J0500MV1CR
A6C3	0160-3670	6	3	CAPACITOR-FXD .1UF +-20% 200VDC CER	28480	0160-3670
A6C4	0121-0474	0	1	CAPACITOR-V TRMR-PSTN .3-1.5PF 600V	28480	0121-0474
A6C5	0170-0022	7	1	CAPACITOR-FXD .1UF +-20% 600VDC POLYE	28480	0170-0022
A6C6	0160-3670	6		CAPACITOR-FXD .1UF +-20% 200VDC CER	28480	0160-3670
A6C7	0160-3007	3	1	CAPACITOR-FXD 4700PF +-20% 4KVDC CER	28480	0160-3007
A6C8	0180-0374	3	2	CAPACITOR-FXD 10UF+-10% 20VDC TA	56289	150D106X9020B2
A6C9	0160-3443	1		CAPACITOR-FXD .1UF +80-20% 50VDC CER	28480	0160-3443
A6C10	0160-3443	1		CAPACITOR-FXD .1UF +80-20% 50VDC CER	28480	0160-3443
A6C11	0160-3443	1		CAPACITOR-FXD .1UF +80-20% 50VDC CER	28480	0160-3443
A6C12	0160-3443	1		CAPACITOR-FXD .1UF +80-20% 50VDC CER	28480	0160-3443
A6C13	0180-0374	3		CAPACITOR-FXD 10UF+-10% 20VDC TA	56289	150D106X9020B2
A6C14	0160-0168	1	4	CAPACITOR-FXD .1UF +-10% 200VDC POLYE	28480	0160-0168
A6C15	0160-0168	1		CAPACITOR-FXD .1UF +-10% 200VDC POLYE	28480	0160-0168
A6C16	0160-0168	1		CAPACITOR-FXD .1UF +-10% 200VDC POLYE	28480	0160-0168
A6C17	0160-0168	1		CAPACITOR-FXD .1UF +-10% 200VDC POLYE	28480	0160-0168
A6C18	0160-2207	3	1	CAPACITOR-FXD 300PF +-5% 300VDC MICA	28480	0160-2207
A6C19	0160-3443	1		CAPACITOR-FXD .1UF +80-20% 50VDC CER	28480	0160-3443
A6C20	0160-3443	1		CAPACITOR-FXD .1UF +80-20% 50VDC CER	28480	0160-3443
A6C21	0160-3670	6		CAPACITOR-FXD .1UF +-20% 200VDC CER	28480	0160-3670
A6C22	0140-0178	1	1	CAPACITOR-FXD 560PF +-2% 300VDC MICA	72136	DM15F561G0300MV1CR
A6CR1	1901-0040	1	28	DIODE-SWITCHING 30V 50MA 2NS DO-35	28480	1901-0040
A6CR2	1901-0040	1		DIODE-SWITCHING 30V 50MA 2NS DO-35	28480	1901-0040
A6CR3	1901-0040	1		DIODE-SWITCHING 30V 50MA 2NS DO-35	28480	1901-0040
A6CR4	1901-0040	1		DIODE-SWITCHING 30V 50MA 2NS DO-35	28480	1901-0040
A6CR5	1901-0040	1		DIODE-SWITCHING 30V 50MA 2NS DO-35	28480	1901-0040
A6CR6	1901-0040	1		DIODE-SWITCHING 30V 50MA 2NS DO-35	28480	1901-0040
A6CR7	1901-0040	1		DIODE-SWITCHING 30V 50MA 2NS DO-35	28480	1901-0040
A6CR8	1901-0040	1		DIODE-SWITCHING 30V 50MA 2NS DO-35	28480	1901-0040
A6CR9	1901-0040	1		DIODE-SWITCHING 30V 50MA 2NS DO-35	28480	1901-0040
A6CR10	1901-0040	1		DIODE-SWITCHING 30V 50MA 2NS DO-35	28480	1901-0040
A6CR11	1901-0040	1		DIODE-SWITCHING 30V 50MA 2NS DO-35	28480	1901-0040
A6CR12	1901-0040	1		DIODE-SWITCHING 30V 50MA 2NS DO-35	28480	1901-0040
A6CR13	1901-0026	3	4	DIODE-PWR RECT 200V 750MA DO-29	28480	1901-0026
A6CR14	1901-0026	3		DIODE-PWR RECT 200V 750MA DO-29	28480	1901-0026
A6CR15	1901-0026	3		DIODE-PWR RECT 200V 750MA DO-29	28480	1901-0026
A6CR16	1901-0026	3		DIODE-PWR RECT 200V 750MA DO-29	28480	1901-0026
A6CR17	1901-0040	1		DIODE-SWITCHING 30V 50MA 2NS DO-35	28480	1901-0040
A6CR18	1901-0040	1		DIODE-SWITCHING 30V 50MA 2NS DO-35	28480	1901-0040
A6CR19	1901-0040	1		DIODE-SWITCHING 30V 50MA 2NS DO-35	28480	1901-0040
A6CR20	1901-0040	1		DIODE-SWITCHING 30V 50MA 2NS DO-35	28480	1901-0040
A6CR21	1901-0040	1		DIODE-SWITCHING 30V 50MA 2NS DO-35	28480	1901-0040
A6CR22	1901-0040	1		DIODE-SWITCHING 30V 50MA 2NS DO-35	28480	1901-0040
A6CR23	1901-0040	1		DIODE-SWITCHING 30V 50MA 2NS DO-35	28480	1901-0040
A6CR24	1901-0040	1		DIODE-SWITCHING 30V 50MA 2NS DO-35	28480	1901-0040
A6CR25	1901-0040	1		DIODE-SWITCHING 30V 50MA 2NS DO-35	28480	1901-0040
A6CR26	1901-0040	1		DIODE-SWITCHING 30V 50MA 2NS DO-35	28480	1901-0040
A6CR27	1901-0040	1		DIODE-SWITCHING 30V 50MA 2NS DO-35	28480	1901-0040
A6CR28	1901-0040	1		DIODE-SWITCHING 30V 50MA 2NS DO-35	28480	1901-0040
A6E6	1205-0213	4	1	HEAT SINK 8GL TO-5/TO-39-CS	28480	1205-0213
A6E7	01300-21102	8	1	HEAT SINK-CLAMP	28480	01300-21102
A6E8	5040-0401	6	1	SUPPORT-CAPACITOR	28480	5040-0401
A6E9	01300-21103	9	1	HEAT SINK-BASE	28480	01300-21103
A6L1	9100-2276	9	2	COIL-MLD 100UH 10% Q=50 .095DX.25LG-NOM	28480	9100-2276
A6L2	9100-2276	9		COIL-MLD 100UH 10% Q=50 .095DX.25LG-NOM	28480	9100-2276
A6Q1	1853-0036	2	15	TRANSISTOR PNP SI PD=310MW FT=250MHZ	28480	1853-0036
A6Q2	1853-0036	2		TRANSISTOR PNP SI PD=310MW FT=250MHZ	28480	1853-0036
A6Q3	1853-0036	2		TRANSISTOR PNP SI PD=310MW FT=250MHZ	28480	1853-0036
A6Q4	1853-0036	2		TRANSISTOR PNP SI PD=310MW FT=250MHZ	28480	1853-0036
A6Q5	1854-0215	1	3	TRANSISTOR NPN SI PD=350MW FT=300MHZ	04713	2N3904
A6Q6	1853-0036	2		TRANSISTOR PNP SI PD=310MW FT=250MHZ	28480	1853-0036
A6Q7	1854-0215	1		TRANSISTOR NPN SI PD=350MW FT=300MHZ	04713	2N3904
A6Q8	1853-0036	2		TRANSISTOR PNP SI PD=310MW FT=250MHZ	28480	1853-0036
A6Q9	1853-0036	2		TRANSISTOR PNP SI PD=310MW FT=250MHZ	28480	1853-0036
A6Q10	1853-0036	2		TRANSISTOR PNP SI PD=310MW FT=250MHZ	28480	1853-0036
A6Q11	1854-0092	2	1	TRANSISTOR NPN SI PD=200MW FT=600MHZ	28480	1854-0092
A6Q13	1853-0036	2		TRANSISTOR PNP SI PD=310MW FT=250MHZ	28480	1853-0036
A6Q14	1853-0036	2		TRANSISTOR PNP SI PD=310MW FT=250MHZ	28480	1853-0036
A6Q15	1853-0036	2		TRANSISTOR PNP SI PD=310MW FT=250MHZ	28480	1853-0036
A6Q16	1853-0036	2		TRANSISTOR PNP SI PD=310MW FT=250MHZ	28480	1853-0036

See introduction to this section for ordering information
*Indicates factory selected value

PART NUMBER 9320 3991

Table 6-2. Replaceable Parts (Cont'd)

Reference Designation	HP Part Number	C D	Qty	Description	Mfr Code	Mfr Part Number
A6Q17	1854-0404	0	2	TRANSISTOR NPN SI TO-18 PD=360MW	28480	1854-0404
A6Q18	1853-0036	2		TRANSISTOR PNP SI PD=310MW FT=250MHZ	28480	1853-0036
A6Q19	1854-0404	0		TRANSISTOR NPN SI TO-18 PD=360MW	28480	1854-0404
A6Q20	1853-0036	2		TRANSISTOR PNP SI PD=310MW FT=250MHZ	28480	1853-0036
A6Q21	1854-0234	4	1	TRANSISTOR NPN 2N3440 SI TO-5 PD=1W	01928	2N3440
A6Q22	1854-0215	1		TRANSISTOR NPN SI PD=350MW FT=300MHZ	04713	2N3904
A6Q23	1853-0036	2		TRANSISTOR PNP SI PD=310MW FT=250MHZ	28480	1853-0036
A6Q24	1853-0038	4	1	TRANSISTOR PNP SI TO-39 PD=1W FT=100MHZ	28480	1853-0038
A6Q25	1854-0419	7	1	TRANSISTOR NPN SI TO-39 PD=1W FT=200MHZ	28480	1854-0419
A6R1	0684-4701	6	16	RESISTOR 47 10% .25W FC TC=-400/+500	01121	CB4701
A6R2	0757-0439	4	8	RESISTOR 6.81K 1% .125W F TC=0+-100	24546	C4-1/8-T0-6811-F
A6R3	0757-0317	7	1	RESISTOR 1.33K 1% .125W F TC=0+-100	24546	C4-1/8-T0-1331-F
A6R4	0757-0439	4		RESISTOR 6.81K 1% .125W F TC=0+-100	24546	C4-1/8-T0-6811-F
A6R5	0684-4701	6		RESISTOR 47 10% .25W FC TC=-400/+500	01121	CB4701
A6R6	0757-0438	3	16	RESISTOR 5.11K 1% .125W F TC=0+-100	24546	C4-1/8-T0-5111-F
A6R7	0757-0438	3		RESISTOR 5.11K 1% .125W F TC=0+-100	24546	C4-1/8-T0-5111-F
A6R8	0757-0438	3		RESISTOR 5.11K 1% .125W F TC=0+-100	24546	C4-1/8-T0-5111-F
A6R9	0757-0438	3		RESISTOR 5.11K 1% .125W F TC=0+-100	24546	C4-1/8-T0-5111-F
A6R10	2100-3352	7	8	RESISTOR-TRMR 1K 10% C SIDE-ADJ 1-TRN	28480	2100-3352
A6R11	2100-3352	7		RESISTOR-TRMR 1K 10% C SIDE-ADJ 1-TRN	28480	2100-3352
A6R12	0757-0416	7	9	RESISTOR 511 1% .125W F TC=0+-100	24546	C4-1/8-T0-511R-F
A6R13	0757-0416	7		RESISTOR 511 1% .125W F TC=0+-100	24546	C4-1/8-T0-511R-F
A6R14	0684-4731	2	4	RESISTOR 47K 10% .25W FC TC=-400/+800	01121	CB4731
A6R15	0684-4701	6		RESISTOR 47 10% .25W FC TC=-400/+500	01121	CB4701
A6R16	0757-0439	4		RESISTOR 6.81K 1% .125W F TC=0+-100	24546	C4-1/8-T0-6811-F
A6R17	0757-0424	7	1	RESISTOR 1.1K 1% .125W F TC=0+-100	24546	C4-1/8-T0-1101-F
A6R18	0757-0439	4		RESISTOR 6.81K 1% .125W F TC=0+-100	24546	C4-1/8-T0-6811-F
A6R19	0684-4701	6		RESISTOR 47 10% .25W FC TC=-400/+500	01121	CB4701
A6R20	0757-0438	3		RESISTOR 5.11K 1% .125W F TC=0+-100	24546	C4-1/8-T0-5111-F
A6R21	0757-0438	3		RESISTOR 5.11K 1% .125W F TC=0+-100	24546	C4-1/8-T0-5111-F
A6R22	0757-0438	3		RESISTOR 5.11K 1% .125W F TC=0+-100	24546	C4-1/8-T0-5111-F
A6R23	2100-3352	7		RESISTOR-TRMR 1K 10% C SIDE-ADJ 1-TRN	28480	2100-3352
A6R24	2100-3352	7		RESISTOR-TRMR 1K 10% C SIDE-ADJ 1-TRN	28480	2100-3352
A6R25	0757-0438	3		RESISTOR 5.11K 1% .125W F TC=0+-100	24546	C4-1/8-T0-5111-F
A6R26	0757-0416	7		RESISTOR 511 1% .125W F TC=0+-100	24546	C4-1/8-T0-511R-F
A6R27	0757-0416	7		RESISTOR 511 1% .125W F TC=0+-100	24546	C4-1/8-T0-511R-F
A6R28	0684-4731	2		RESISTOR 47K 10% .25W FC TC=-400/+800	01121	CB4731
A6R29	0684-4701	6		RESISTOR 47 10% .25W FC TC=-400/+500	01121	CB4701
A6R30	0684-4701	6		RESISTOR 47 10% .25W FC TC=-400/+500	01121	CB4701
A6R31	0757-0414	5	2	RESISTOR 432 1% .125W F TC=0+-100	24546	C4-1/8-T0-432R-F
A6R32	0757-0414	5		RESISTOR 432 1% .125W F TC=0+-100	24546	C4-1/8-T0-432R-F
A6R33	0757-0409	8	4	RESISTOR 274 1% .125W F TC=0+-100	24546	C4-1/8-T0-274R-F
A6R34	0757-0280	3	6	RESISTOR 1K 1% .125W F TC=0+-100	24546	C4-1/8-T0-1001-F
A6R35	0757-0409	8		RESISTOR 274 1% .125W F TC=0+-100	24546	C4-1/8-T0-274R-F
A6R36	0757-0280	3		RESISTOR 1K 1% .125W F TC=0+-100	24546	C4-1/8-T0-1001-F
A6R37	0757-0728	4	1	RESISTOR 619 1% .25W F TC=0+-100	24546	C5-1/4-T0-619R-F
A6R38	0757-0907	1	2	RESISTOR 200 2% .125W F TC=0+-100	24546	C4-1/8-T0-201-G
A6R39	0757-0907	1		RESISTOR 200 2% .125W F TC=0+-100	24546	C4-1/8-T0-201-G
A6R40	0757-0280	3		RESISTOR 1K 1% .125W F TC=0+-100	24546	C4-1/8-T0-1001-F
A6R41	0698-0085	0	1	RESISTOR 2.61K 1% .125W F TC=0+-100	24546	C4-1/8-T0-2611-F
A6R42	0757-0346	2	1	RESISTOR 10 1% .125W F TC=0+-100	24546	C4-1/8-T0-10R0-F
A6R43	2100-2574	3	1	RESISTOR-TRMR 500 10% C SIDE-ADJ 1-TRN	30983	ET50X501
A6R44	2100-3274	2	2	RESISTOR-TRMR 10K 10% C SIDE-ADJ 1-TRN	28480	2100-3274
A6R45	0757-0437	2	1	RESISTOR 4.75K 1% .125W F TC=0+-100	24546	C4-1/8-T0-4751-F
A6R46	0757-0283	6	1	RESISTOR 2K 1% .125W F TC=0+-100	24546	C4-1/8-T0-2001-F
A6R47	2100-2489	9	1	RESISTOR-TRMR 5K 10% C SIDE-ADJ 1-TRN	30983	ET50X502
A6R48	0684-4701	6		RESISTOR 47 10% .25W FC TC=-400/+500	01121	CB4701
A6R49	0684-4701	6		RESISTOR 47 10% .25W FC TC=-400/+500	01121	CB4701
A6R50	0687-4711	4	2	RESISTOR 470 10% .5W CC TC=0+520	01121	EB4711
A6R51	0684-3901	6	3	RESISTOR 39 10% .25W FC TC=-400/+500	01121	CB3901
A6R52	0687-4711	4		RESISTOR 470 10% .5W CC TC=0+520	01121	EB4711
A6R54	0684-4701	6		RESISTOR 47 10% .25W FC TC=-400/+500	01121	CB4701
A6R55	0757-0439	4		RESISTOR 6.81K 1% .125W F TC=0+-100	24546	C4-1/8-T0-6811-F
A6R56	0757-0421	4	2	RESISTOR 825 1% .125W F TC=0+-100	24546	C4-1/8-T0-825R-F
A6R57	0757-0439	4		RESISTOR 6.81K 1% .125W F TC=0+-100	24546	C4-1/8-T0-6811-F
A6R58	0684-4701	6		RESISTOR 47 10% .25W FC TC=-400/+500	01121	CB4701
A6R59	0757-0438	3		RESISTOR 5.11K 1% .125W F TC=0+-100	24546	C4-1/8-T0-5111-F
A6R60	0757-0438	3		RESISTOR 5.11K 1% .125W F TC=0+-100	24546	C4-1/8-T0-5111-F
A6R61	2100-3352	7		RESISTOR-TRMR 1K 10% C SIDE-ADJ 1-TRN	28480	2100-3352
A6R62	2100-3352	7		RESISTOR-TRMR 1K 10% C SIDE-ADJ 1-TRN	28480	2100-3352
A6R63	0757-0438	3		RESISTOR 5.11K 1% .125W F TC=0+-100	24546	C4-1/8-T0-5111-F
A6R64	0757-0438	3		RESISTOR 5.11K 1% .125W F TC=0+-100	24546	C4-1/8-T0-5111-F
A6R65	0757-0416	7		RESISTOR 511 1% .125W F TC=0+-100	24546	C4-1/8-T0-511R-F
A6R66	0757-0416	7		RESISTOR 511 1% .125W F TC=0+-100	24546	C4-1/8-T0-511R-F

See introduction to this section for ordering information
*Indicates factory selected value

Table 6-2. Replaceable Parts (Cont'd)

Reference Designation	HP Part Number	C D	Qty	Description	Mfr Code	Mfr Part Number
A6R67	0684-4731	2		RESISTOR 47K 10% .25W FC TC=-400/+800	01121	CB4731
A6R68	0684-4701	6		RESISTOR 47 10% .25W FC TC=-400/+500	01121	CB4701
A6R69	0757-0439	4		RESISTOR 6.81K 1% .125W F TC=0+-100	24546	C4-1/8-T0-6811-F
A6R70	0757-0421	4		RESISTOR 825 1% .125W F TC=0+-100	24546	C4-1/8-T0-825R-F
A6R71	0757-0439	4		RESISTOR 6.81K 1% .125W F TC=0+-100	24546	C4-1/8-T0-6811-F
A6R72	0684-4701	6		RESISTOR 47 10% .25W FC TC=-400/+500	01121	CB4701
A6R73	0757-0438	3		RESISTOR 5.11K 1% .125W F TC=0+-100	24546	C4-1/8-T0-5111-F
A6R74	2100-3352	7		RESISTOR-TRMR 1K 10% C SIDE-ADJ 1-TRN	28480	2100-3352
A6R75	2100-3352	7		RESISTOR-TRMR 1K 10% C SIDE-ADJ 1-TRN	28480	2100-3352
A6R76	0757-0438	3		RESISTOR 5.11K 1% .125W F TC=0+-100	24546	C4-1/8-T0-5111-F
A6R77	0757-0438	3		RESISTOR 5.11K 1% .125W F TC=0+-100	24546	C4-1/8-T0-5111-F
A6R78	0757-0438	3		RESISTOR 5.11K 1% .125W F TC=0+-100	24546	C4-1/8-T0-5111-F
A6R79	0757-0416	7		RESISTOR 511 1% .125W F TC=0+-100	24546	C4-1/8-T0-511R-F
A6R80	0757-0416	7		RESISTOR 511 1% .125W F TC=0+-100	24546	C4-1/8-T0-511R-F
A6R81	0684-4731	2		RESISTOR 47K 10% .25W FC TC=-400/+800	01121	CB4731
A6R82	0684-4701	6		RESISTOR 47 10% .25W FC TC=-400/+500	01121	CB4701
A6R83	0684-4701	6		RESISTOR 47 10% .25W FC TC=-400/+500	01121	CB4701
A6R84	0757-0280	3		RESISTOR 1K 1% .125W F TC=0+-100	24546	C4-1/8-T0-1001-F
A6R85	0757-0402	1	1	RESISTOR 110 1% .125W F TC=0+-100	24546	C4-1/8-T0-111-F
A6R86	0757-0294	9	1	RESISTOR 17.8 1% .125W F TC=0+-100	19701	MF4C1/8-T0-17R8-F
A6R87	0757-0416	7		RESISTOR 511 1% .125W F TC=0+-100	24546	C4-1/8-T0-511R-F
A6R88	0757-0409	8		RESISTOR 274 1% .125W F TC=0+-100	24546	C4-1/8-T0-274R-F
A6R89	0757-0280	3		RESISTOR 1K 1% .125W F TC=0+-100	24546	C4-1/8-T0-1001-F
A6R90	2100-3274	2		RESISTOR-TRMR 10K 10% C SIDE-ADJ 1-TRN	28480	2100-3274
A6R91	0757-0747	7	1	RESISTOR 5.11K 1% .25W F TC=0+-100	24546	C5-1/4-T0-5111-F
A6R92	0757-0339	3	1	RESISTOR 3.01K 1% .25W F TC=0+-100	24546	C5-1/4-T0-3011-F
A6R93	0757-0409	8		RESISTOR 274 1% .125W F TC=0+-100	24546	C4-1/8-T0-274R-F
A6R94	0757-0280	3		RESISTOR 1K 1% .125W F TC=0+-100	24546	C4-1/8-T0-1001-F
A6R95	0684-4701	6		RESISTOR 47 10% .25W FC TC=-400/+500	01121	CB4701
A6R96	0811-0007	8	1	RESISTOR 10K 1% 5W PW TC=0+-20	28480	0811-0007
A6R97	0684-4701	6		RESISTOR 47 10% .25W FC TC=-400/+500	01121	CB4701
A6R98	0687-4701	2	1	RESISTOR 47 10% .5W CC TC=0+412	01121	EB4701
A6R100	0757-0736	4	2	RESISTOR 1.5K 1% .25W F TC=0+-100	24546	C5-1/4-T0-1501-F
A6R101	0757-0764	8	1	RESISTOR 33.2K 1% .25W F TC=0+-100	24546	C5-1/4-T0-3322-F
A6R102	0764-0005	5	1	RESISTOR 10K 5% 2W MO TC=0+-200	28480	0764-0005
A6R103	0757-0736	4		RESISTOR 1.5K 1% .25W F TC=0+-100	24546	C5-1/4-T0-1501-F
A6R104	0757-0290	5	1	RESISTOR 6.19K 1% .125W F TC=0+-100	19701	MF4C1/8-T0-6191-F
A6R105	0684-3901	6		RESISTOR 39 10% .25W FC TC=-400/+500	01121	CB3901
A6R106	0684-3901	6		RESISTOR 39 10% .25W FC TC=-400/+500	01121	CB3901
A6R107	0687-1821	1	1	RESISTOR 1.8K 10% .5W CC TC=0+647	01121	EB1821
A6R108	0687-2231	9	1	RESISTOR 22K 10% .5W CC TC=0+765	01121	EB2231
A6R109	0687-1051	9	1	RESISTOR 1M 10% .5W CC TC=0+1000	01121	EB1051
A6R110	0687-6801	7	1	RESISTOR 68 10% .5W CC TC=0+412	01121	EB6801
A6VR3	1902-0041	4	2	DIODE-ZNR 5.11V 5% DO-7 PD=.4W TC=-.009%	28480	1902-0041
A6VR4	1902-0041	4		DIODE-ZNR 5.11V 5% DO-7 PD=.4W TC=-.009%	28480	1902-0041

See introduction to this section for ordering information
*Indicates factory selected value

PART NUMBER 9320 3991

Table 6-2. Replaceable Parts (Cont'd)

Reference Designation	HP Part Number	C D	Qty	Description	Mfr Code	Mfr Part Number
A9	01311-66504	1	1	PC BOARD ASSEMBLY-HIGH VOLTAGE	28480	01311-66504
A9C1	0180-1784	1	1	CAPACITOR-FXD 1000UF+75-10% 40VDC AL	28480	0180-1784
A9C2	0160-3558	9	2	CAPACITOR-FXD .1UF +-20% 50VDC CER	28480	0160-3558
A9C3	0180-0094	4	1	CAPACITOR-FXD 100UF+75-10% 25VDC AL	56289	30D107G025DD2
A9C4	0180-0089	1	1	CAPACITOR-FXD 10UF +50-10% 150VDC AL	28480	0180-0168
A9C5	0180-0197	8	1	CAPACITOR-FXD 2.2UF+-10% 20VDC TA	56289	150D225X9020A2
A9C6	0160-3508	9	2	CAPACITOR-FXD 1UF +80-20% 50VDC CER	28480	0160-3508
A9C7	0160-0302	5	1	CAPACITOR-FXD .018UF +-10% 200VDC POLYE	28480	0160-0302
A9C8	0160-3508	9		CAPACITOR-FXD 1UF +80-20% 50VDC CER	28480	0160-3508
A9C9	0160-0166	9	1	CAPACITOR-FXD 1UF +-10% 200VDC POLYE	28480	0160-0166
A9C10	0160-3558	9		CAPACITOR-FXD .1UF +-20% 50VDC CER	28480	0160-3558
A9C11	0180-2255	3	1	CAPACITOR-FXD 2.2UF+-20% 20VDC TA	28480	0180-2255
A9C12	0160-2055	9	1	CAPACITOR-FXD .01UF +80-20% 100VDC CER	28480	0160-2055
A9C13	0160-4148	5	2	CAPACITOR-FXD .033UF +-20% 6KVDC	56289	430P333060
A9C14	0160-4148	5		CAPACITOR-FXD .033UF +-20% 6KVDC	56289	430P333060
A9C15	0160-3960	7	2	CAPACITOR-FXD 1000PF +-20% 8KVDC	28480	0160-3960
A9C16	0160-2264	2	2	CAPACITOR-FXD 20PF +-5% 500VDC CER 0+-30	28480	0160-2264
A9C17	0160-2264	2		CAPACITOR-FXD 20PF +-5% 500VDC CER 0+-30	28480	0160-2264
A9C18	0180-0269	5	2	CAPACITOR-FXD 1UF+50-10% 150VDC AL	56289	30D105G150BA2
A9C19	0160-3960	7		CAPACITOR-FXD 1000PF +-20% 8KVDC	28480	0160-3960
A9C20	0160-0678	8	1	CAPACITOR-FXD .01UF +-20% 6KVDC	28480	0160-0678
A9C21	0180-0269	5		CAPACITOR-FXD 1UF+50-10% 150VDC AL	56289	30D105G150BA2
A9C22	0160-0544	7	1	CAPACITOR-FXD .022UF +-20% 4KVDC	28480	0160-0544
A9C23	0160-0684	6	1	CAPACITOR-FXD 1000PF +-20% 4KVDC	28480	0160-0684
A9C24	0160-4051	9	1	CAPACITOR-FXD .01UF +-20% 4KVDC	28480	0160-4051
A9CR1	1901-0040	1	3	DIODE-SWITCHING 30V 50MA 2NS DO-35	28480	1901-0040
A9CR2	1901-0040	1		DIODE-SWITCHING 30V 50MA 2NS DO-35	28480	1901-0040
A9CR3	1901-0028	5	11	DIODE-PWR RECT 400V 750MA DO-29	28480	1901-0028
A9CR4	1901-0028	5		DIODE-PWR RECT 400V 750MA DO-29	28480	1901-0028
A9CR5	1901-0028	5		DIODE-PWR RECT 400V 750MA DO-29	28480	1901-0028
A9CR6	1901-0040	1		DIODE-SWITCHING 30V 50MA 2NS DO-35	28480	1901-0040
A9CR7	1901-0652	1	1	DIODE-HV RECT 12KV 10MA 250NS	28480	1901-0652
A9CR8	1901-0028	5		DIODE-PWR RECT 400V 750MA DO-29	28480	1901-0028
A9CR9	1901-0028	5		DIODE-PWR RECT 400V 750MA DO-29	28480	1901-0028
A9CR10	1901-0028	5		DIODE-PWR RECT 400V 750MA DO-29	28480	1901-0028
A9CR11	1901-0028	5		DIODE-PWR RECT 400V 750MA DO-29	28480	1901-0028
A9CR12	1901-0028	5		DIODE-PWR RECT 400V 750MA DO-29	28480	1901-0028
A9CR13	1901-0028	5		DIODE-PWR RECT 400V 750MA DO-29	28480	1901-0028
A9CR14	1901-0028	5		DIODE-PWR RECT 400V 750MA DO-29	28480	1901-0028
A9CR15	1901-0028	5		DIODE-PWR RECT 400V 750MA DO-29	28480	1901-0028
A9CR16	1906-0006	9	1	DIODE-FW BRDG 400V 1A	28480	1906-0006
A9F1	2110-0304	4	1	FUSE 1.5A 250V 1.25X.25 UL	28480	2110-0304
A9L1	9140-0171	3	1	COIL-MLD 40UH 10% Q=20 .296DX.968LG-NOM	28480	9140-0171
A9L2	9140-0138	2	1	COIL-MLD 180UH 5% Q=65 .155DX.375LG-NOM	28480	9140-0138
A9Q3	1884-0064	1	1	THYRISTOR-SCR VRRM=200	03508	C106B41
A9R1	0687-3921	6	1	RESISTOR 3.9K 10% .5W CC TC=0+647	01121	EB3921
A9R2	0687-3311	8	1	RESISTOR 330 10% .5W CC TC=0+529	01121	EB3311
A9R3	0757-0486	1	1	RESISTOR 750K 1% .125W F TC=0+-100	28480	0757-0486
A9R4	0757-0488	3	1	RESISTOR 909K 1% .125W F TC=0+-100	28480	0757-0488
A9R5	0698-3620	5	1	RESISTOR 100 5% 2W MO TC=0+-200	28480	0698-3620
A9R6	0683-0335	2	1	RESISTOR 3.3 5% .25W FC TC=-400/+500	01121	CB3305
A9R7	0757-0465	6	2	RESISTOR 100K 1% .125W F TC=0+-100	24546	C4-1/8-T0-1003-F
A9R8	0683-2265	1	1	RESISTOR 22M 5% .25W FC TC=-900/+1200	01121	CB2265
A9R9	0757-0465	6		RESISTOR 100K 1% .125W F TC=0+-100	24546	C4-1/8-T0-1003-F
A9R10	0684-1011	5	1	RESISTOR 100 10% .25W FC TC=-400/+500	01121	CB1011
A9R11	0757-0479	2	1	RESISTOR 392K 1% .125W F TC=0+-100	19701	MF4C1/8-T0-3923-F
A9R12	0684-1021	7	8	RESISTOR 1K 10% .25W FC TC=-400/+600	01121	CB1021
A9R13	0687-3911	4	1	RESISTOR 220 10% .5W CC TC -0 +529	01121	EB3911
A9R14	0757-0273	4	1	RESISTOR 3.01K 1% .125W F TC=0+-100	24546	C4-1/8-T0-3011-F
A9R15	0757-0440	7	1	RESISTOR 7.5K 1% .125W F TC=0+-100	24546	C4-1/8-T0-7501-F
A9R16	0757-0442	9	2	RESISTOR 10K 1% .125W F TC=0+-100	24546	C4-1/8-T0-1002-F
A9R17	0757-0442	9		RESISTOR 10K 1% .125W F TC=0+-100	24546	C4-1/8-T0-1002-F
A9R18	0683-1555	0	3	RESISTOR 1.5M 5% .25W FC TC=-900/+1100	01121	CB1555
A9R19	0683-1555	0		RESISTOR 1.5M 5% .25W FC TC=-900/+1100	01121	CB1555
A9R20	0683-1555	0		RESISTOR 1.5M 5% .25W FC TC=-900/+1100	01121	CB1555
A9R21	0698-3161	9	1	RESISTOR 38.3K 1% .125W F TC=0+-100	24546	C4-1/8-T0-3832-F
A9R22	0757-0475	8	1	RESISTOR 274K 1% .125W F TC=0+-100	24546	C4-1/8-T0-2743-F
A9R23	0687-4721	6	1	RESISTOR 4.7K 10% .5W CC TC=0+647	01121	EB4721
A9R24	0698-8018	5	2	RESISTOR 30M 1% 3W C TC=0+-100	03888	PVC175-3-T0-3004-F
A9R25	0687-3941	0	2	RESISTOR 390K 10% .5W CC TC=0+882	01121	EB3941

See introduction to this section for ordering information
*Indicates factory selected value

Table 6-2. Replaceable Parts (Cont'd)

Reference Designation	HP Part Number	C D	Qty	Description	Mfr Code	Mfr Part Number
A9R26	0687-3941	0		RESISTOR 390K 10% .5W CC TC=0+882	01121	EB3941
A9R27	0698-8018	5		RESISTOR 30M 1% 3W C TC=0+-100	03888	PVC175-3-T0-3004-F
A9R28	0684-1021	7		RESISTOR 1K 10% .25W FC TC=-400/+600	01121	CB1021
A9R29	0757-0156	2	1	RESISTOR 1.5M 1% .5W F TC=0+-100	28480	0757-0156
A9R30	2100-3626	8	1	RESISTOR-TRMR 2M 20% C SIDE-ADJ 1-TRN	73138	72XR2M
A9R31	0699-0167	1	1	RESISTOR 20M 5% 1W C TC=0+-250	28480	0699-0167
A9R32	0684-1021	7		RESISTOR 1K 10% .25W FC TC=-400/+600	01121	CB1021
A9R33	0684-1061	5	2	RESISTOR 10M 10% .25W FC TC=-900/+1100	01121	CB1061
A9R34	0684-1021	7		RESISTOR 1K 10% .25W FC TC=-400/+600	01121	CB1021
A9R35	0684-1021	7		RESISTOR 1K 10% .25W FC TC=-400/+600	01121	CB1021
A9R36	0684-1021	7		RESISTOR 1K 10% .25W FC TC=-400/+600	01121	CB1021
A9R37	2100-3253	7	1	RESISTOR-TRMR 50K 10% C TOP-ADJ 1-TRN	28480	2100-3253
A9R39	0684-1061	5		RESISTOR 10M 10% .25W FC TC=-900/+1100	01121	CB1061
A9R40	0684-1021	7		RESISTOR 1K 10% .25W FC TC=-400/+600	01121	CB1021
A9R41	0684-1021	7		RESISTOR 1K 10% .25W FC TC=-400/+600	01121	CB1021
A9R42	0684-6811	3	1	RESISTOR 680 10% .25W FC TC=-400/+600	01121	CB6811
A9RT1	0837-0105	1	2	THERMISTOR BEAD 200K-OHM TC=-4.9%/C-DEG	28480	0837-0105
A9RT2	0837-0105	1		THERMISTOR BEAD 200K-OHM TC=-4.9%/C-DEG	28480	0837-0105
A9T1	01311-61101	4	1	TRANSFORMER ASSEMBLY-HV	28480	01311-61101
A9U1	1826-0167	3	1	IC OP AMP PRGMBL TO-99	01928	CA3094AT
A9U2	1820-0217	2	1	IC OP AMP GP 8-DIP-P	28480	1820-0217
A9VR1	1902-3249	0	1	DIODE-ZNR 22.1V 2% DO-7 PD=.4W TC=+.071%	28480	1902-3249
A9VR2	1902-0041	4	2	DIODE-ZNR 5.11V 5% DO-7 PD=.4W TC=-.009%	28480	1902-0041
A9VR3	1902-0041	4		DIODE-ZNR 5.11V 5% DO-7 PD=.4W TC=-.009%	28480	1902-0041
A9VR4	1902-3381	1	2	DIODE-ZNR 68.1V 5% DO-7 PD=.4W TC=+.079%	28480	1902-3381
A9VR5	1902-3381	1		DIODE-ZNR 68.1V 5% DO-7 PD=.4W TC=+.079%	28480	1902-3381
A9VR6	1902-0668	1	5	DIODE-ZNR 200V 5% DO-15 PD=1W TC=+.088%	28480	1902-0668
A9VR7	1902-0668	1		DIODE-ZNR 200V 5% DO-15 PD=1W TC=+.088%	28480	1902-0668
A9VR8	1902-0668	1		DIODE-ZNR 200V 5% DO-15 PD=1W TC=+.088%	28480	1902-0668
A9VR9	1902-0668	1		DIODE-ZNR 200V 5% DO-15 PD=1W TC=+.088%	28480	1902-0668
A9VR10	1902-0668	1		DIODE-ZNR 200V 5% DO-15 PD=1W TC=+.088%	28480	1902-0668
A9VR11	1902-0175	5	1	DIODE-ZNR 100V 5% DO-15 PD=1W TC=+.083%	28480	1902-0175
A9VR12	1902-3557	7	1	DIODE-ZNR 56.2V 2% DO-7 PD 4W	28480	1902-3402

See introduction to this section for ordering information
*Indicates factory selected value

Table 6-2. Replaceable Parts (Cont'd)

Reference Designation	HP Part Number	C D	Qty	Description	Mfr Code	Mfr Part Number
A11	01310-66533	5	1	PC BOARD ASSEMBLY-LVPS	28480	01310-66533
A11C1	0160-3443	1	3	CAPACITOR-FXD .1UF +80-20% 50VDC CER	28480	0160-3443
A11C2	0160-3443	1		CAPACITOR-FXD .1UF +80-20% 50VDC CER	28480	0160-3443
A11C3	0180-0058	0	2	CAPACITOR-FXD 50UF+75-10% 25VDC AL	56289	30D506G025CC2
A11C4	0160-3443	1		CAPACITOR-FXD .1UF +80-20% 50VDC CER	28480	0160-3443
A11C5	0180-0058	0		CAPACITOR-FXD 50UF+75-10% 25VDC AL	56289	30D506G025CC2
A11C6	0160-0168	1	2	CAPACITOR-FXD .1UF +-10% 200VDC POLYE	28480	0160-0168
A11C7	0160-0168	1		CAPACITOR-FXD .1UF +-10% 200VDC POLYE	28480	0160-0168
A11C8	0170-0022			CAPACITOR-FXD 1UF +-20% 600 VDC	28480	0170-0022
A11C9	0160-0168			CAPACITOR-FXD .1UF +-10% 200 VDC	28480	0160-0168
A11C10	0160-0168			CAPACITOR-FXD 1UF +-10% 200 VDC	28480	0160-0168
A11CR1	1901-0030	9	8	DIODE-PWR RECT 600V 600MA DO-29	28480	1901-0030
A11CR2	1901-0030	9		DIODE-PWR RECT 600V 600MA DO-29	28480	1901-0030
A11CR3	1901-0030	9		DIODE-PWR RECT 600V 600MA DO-29	28480	1901-0030
A11CR4	1901-0030	9		DIODE-PWR RECT 600V 600MA DO-29	28480	1901-0030
A11CR5	1901-0026	3	8	DIODE-PWR RECT 200V 750MA DO-29	28480	1901-0026
A11CR6	1901-0026	3		DIODE-PWR RECT 200V 750MA DO-29	28480	1901-0026
A11CR7	1901-0026	3		DIODE-PWR RECT 200V 750MA DO-29	28480	1901-0026
A11CR8	1901-0026	3		DIODE-PWR RECT 200V 750MA DO-29	28480	1901-0026
A11CR9	1901-0026	3		DIODE-PWR RECT 200V 750MA DO-29	28480	1901-0026
A11CR10	1901-0026	3		DIODE-PWR RECT 200V 750MA DO-29	28480	1901-0026
A11CR11	1901-0026	3		DIODE-PWR RECT 200V 750MA DO-29	28480	1901-0026
A11CR12	1901-0026	3		DIODE-PWR RECT 200V 750MA DO-29	28480	1901-0026
A11CR13	1901-0040	1	8	DIODE-SWITCHING 30V 50MA 2NS DO-35	28480	1901-0040
A11CR14	1901-0040	1		DIODE-SWITCHING 30V 50MA 2NS DO-35	28480	1901-0040
A11CR15	1901-0028	5	1	DIODE-PWR RECT 400V 750MA DO-29	28480	1901-0028
A11CR16	1901-0040	1		DIODE-SWITCHING 30V 50MA 2NS DO-35	28480	1901-0040
A11CR17	1901-0040	1		DIODE-SWITCHING 30V 50MA 2NS DO-35	28480	1901-0040
A11CR18	1901-0040	1		DIODE-SWITCHING 30V 50MA 2NS DO-35	28480	1901-0040
A11CR19	1901-0040	1		DIODE-SWITCHING 30V 50MA 2NS DO-35	28480	1901-0040
A11CR20	1901-0040	1		DIODE-SWITCHING 30V 50MA 2NS DO-35	28480	1901-0040
A11CR21	1901-0040	1		DIODE-SWITCHING 30V 50MA 2NS DO-35	28480	1901-0040
A11F1	2110-0067	6	1	FUSE .3A 250V 1.25X.25 UL	28480	2110-0067
A11F2	2110-0001	8	2	FUSE 1A 250V 1.25X.25 UL	75915	312001
A11F3	2110-0001	8		FUSE 1A 250V 1.25X.25 UL	75915	312001
A11Q1	1854-0234	4	2	TRANSISTOR NPN 2N3440 SI TO-5 PD=1W	01928	2N3440
A11Q2	1854-0358	3	2	TRANSISTOR NPN SI PD=310MW FT=60MHZ	28480	1854-0358
A11Q3	1854-0358	3		TRANSISTOR NPN SI PD=310MW FT=60MHZ	28480	1854-0358
A11Q4	1854-0234	4		TRANSISTOR NPN 2N3440 SI TO-5 PD=1W	01928	2N3440
A11Q5	1854-0071	7	2	TRANSISTOR NPN SI PD=300MW FT=200MHZ	28480	1854-0071
A11Q6	1854-0022	8	1	TRANSISTOR NPN SI TO-39 PD=700MW	07263	817843
A11Q7	1854-0071	7		TRANSISTOR NPN SI PD=300MW FT=200MHZ	28480	1854-0071
A11R1	0764-0027	1	1	RESISTOR 75K 5% 2W MO TC=0+-200	28480	0764-0027
A11R2	0811-1853	4	1	RESISTOR 25 5% 5W PW TC=0+-20	28480	0811-1853
A11R3	0764-0001	1	1	RESISTOR 6.2K 5% 2W MO TC=0+-200	28480	0764-0001
A11R4	0757-0388	2	3	RESISTOR 30.1 1% .125W F TC=0+-100	24546	C4-1/8-T0-30R1-F
A11R5	0757-0128	8	1	RESISTOR 200K 1% .5W F TC=0+-100	28480	0757-0128
A11R6	0757-0399	5	1	RESISTOR 82.5 1% .125W F TC=0+-100	24546	C4-1/8-T0-82R5-F
A11R7	0757-0433	8	1	RESISTOR 3.32K 1% .125W F TC=0+-100	24546	C4-1/8-T0-3321-F
A11R8	0757-0855	8	3	RESISTOR 68.1K 1% .5W F TC=0+-100	28480	0757-0855
A11R9	0757-0855	8		RESISTOR 68.1K 1% .5W F TC=0+-100	28480	0757-0855
A11R10	0757-0341	7	1	RESISTOR 30.1K 1% .25W F TC=0+-100	24546	C5-1/4-T0-3012-F
A11R11	0757-0848	9	1	RESISTOR 30.1K 1% .5W F TC=0+-100	28480	0757-0848
A11R12	2100-1986	0	1	RESISTOR-TRMR 1K 10% C TOP-ADJ 1 TRN	73138	2100-1986
A11R13	0757-0309	8		RESISTOR 61.9K 1% .5W F TC=0+-100	28480	0757-0309
A11R14	0757-0850	3	1	RESISTOR 39.2K 1% .5W F TC=0+-100	28480	0757-0850
A11R15	0687-3321	0	2	RESISTOR 3.3K 10% .5W CC TC=0+647	01121	EB3321
A11R16	0698-3622	7	1	RESISTOR 120 5% 2W MO TC=0+-200	28480	0698-3622
A11R17	0757-0446	3	1	RESISTOR 15K 1% .125W F TC=0+-100	24546	C4-1/8-T0-1502-F
A11R18	0757-0388	2		RESISTOR 30.1 1% .125W F TC=0+-100	24546	C4-1/8-T0-30R1-F
A11R19	0757-0352	0	1	RESISTOR 150K 1% .5W F TC=0+-100	28480	0757-0352
A11R20	0757-0344	0	1	RESISTOR 1M 1% .25W F TC=0+-100	24546	C5-1/4-T0-1004-F
A11R21	0757-0434	9	1	RESISTOR 3.65K 1% .125W F TC=0+-100	24546	C4-1/8-T0-3651-F
A11R22	0698-3152	8	1	RESISTOR 3.48K 1% .125W F TC=0+-100	24546	C4-1/8-T0-3481-F
A11R23	0687-3321	0		RESISTOR 3.3K 10% .5W CC TC=0+647	01121	EB3321
A11R24	0757-0440	7	1	RESISTOR 7.5K 1% .125W F TC=0+-100	24546	C4-1/8-T0-7501-F
A11R25	0757-0388	2		RESISTOR 30.1 1% .125W F TC=0+-100	24546	C4-1/8-T0-30R1-F
A11R26	0757-0737	5	1	RESISTOR 1.62K 1% .25W F TC=0+-100	24546	C5-1/4-T0-1621-F
A11R27	0757-0458	7	1	RESISTOR 51.1K 1% .125W F TC=0+-100	24546	C4-1/8-T0-5112-F
A11R28	0698-3150	6	1	RESISTOR 2.37K 1% .125W F TC=0+-100	24546	C4-1/8-T0-2371-F
A11R29	2100-2061	3	1	RESISTOR-TRMR 200 10% C TOP-ADJ 1-TRN	73138	82PR200
A11R30	0757-1094	9	1	RESISTOR 1.47K 1% .125W F TC=0+-100	24546	C4-1/8-T0-1471-F

See introduction to this section for ordering information
*Indicates factory selected value

Table 6-2. Replaceable Parts (Cont'd)

Reference Designation	HP Part Number	C D	Qty	Description	Mfr Code	Mfr Part Number
A11R31	0757-0009	5	2	RESISTOR 12K 5% 3W MO TC=0+-250	27167	FP3-3-250-1202-J
A11R32	0757-0009	5		RESISTOR 12K 5% 3W MO TC=0+-250	27167	FP3-3-250-1202-J
A11R33	0684-3321	4	2	RESISTOR 3.3K 10% .25W FC TC=-400/+700	01121	CB3321
A11R34	0684-3321	4		RESISTOR 3.3K 10% .25W FC TC=-400/+700	01121	CB3321
A11R35	0757-0008	4	2	RESISTOR 10K 5% 3W MO TC=0+-250	27167	FP3-3-250-1002-J
A11R36	0757-0008	4		RESISTOR 10K 5% 3W MO TC=0+-250	27167	FP3-3-250-1002-J
A11V1	1940-0025	4	1	TUBE-ELECTRON DIODE-V REGLTR	28480	1940-0025
A11VR1	1902-0175	5	1	DIODE-ZNR 100V 5% DO-15 PD=1W TC=+.083%	28480	1902-0175
A11VR2	1902-0049	2	1	DIODE-ZNR 6.19V 5% DO-7 PD=.4W TC=+.022%	28480	1902-0049
A11VR3	1902-0065	2	1	DIODE-ZNR 40.4V 10% DO-7 PD=.4W	28480	1902-0065
A11VR4	1902-3393	5	1	DIODE-ZNR 75V 5% DO-7 PD=.4W TC=+.077%	28480	1902-3393
A11VR5	1902-0033	4	1	DIODE-ZNR 1N823 6.2V 5% DO-7 PD=.4W	24046	1N823
A11VR6	1902-0185	7	1	DIODE-ZNR 27.4V 5% DO-7 PD=.4W TC=+.079%	28480	1902-0185
A11XF1	2110-0269	0	6	FUSEHOLDER-CLIP TYPE.25D-FUSE	28480	2110-0269
A11XF2	2110-0269	0		FUSEHOLDER-CLIP TYPE.25D-FUSE	28480	2110-0269
A11XF3	2110-0269	0		FUSEHOLDER-CLIP TYPE.25D-FUSE	28480	2110-0269
A12	0960-0444			POWER MODULE NON-FILTERED	28480	0960-0444
A13	01310-66539	0	1	BOARD ASSEMBLY-CONTROL	28480	01310-66539
A13R1	2100-3838	4	1	RESISTOR-VAR, 1K, +-20%, 1W, LIN	28480	2100-3838
A13R2	2100-3839	5	7	RESISTOR-VAR, 5K, +-20%, 1W, LIN	28480	2100-3839
A13R3	2100-3839	5		RESISTOR-VAR, 5K, +-20%, 1W, LIN	28480	2100-3839
A13R4	2100-3839	5		RESISTOR-VAR, 5K, +-20%, 1W, LIN	28480	2100-3839
A13R5	2100-3839	5		RESISTOR-VAR, 5K, +-20%, 1W, LIN	28480	2100-3839
A13R6	2100-3839	5		RESISTOR-VAR, 5K, +-20%, 1W, LIN	28480	2100-3839
A13R7	2100-3839	5		RESISTOR-VAR, 5K, +-20%, 1W, LIN	28480	2100-3839
A13R8	2100-3839	5		RESISTOR-VAR, 5K, +-20%, 1W, LIN	28480	2100-3839
A13R9	0687-1001	9	1	RESISTOR 10 10% .5W CC TC=0+412	01121	EB1001
				OPTION 001		
MP38	01311-68701		1	RACK MOUNT KIT	28480	01311-68701
				OPTION 002		
MP39	01311-68712		1	SHORT TILT STAND	28480	01311-68712
				OPTION 003		
A5	01317-66502			Z-AXIS BOARD	28480	01317-66502
				OPTION 004		
MP6	01311-69507		1	CONTRAST FILTER KIT	28480	01311-69507
MP40	01311-68713		1	PANEL MASK ASSY	28480	01311-68713
				OPTION 604		
V1	5083-3261			CRT-P4	28480	5083-3261
				OPTION 639		
V1	5083-3270			CRT-P39	28480	5083-3270

See introduction to this section for ordering information
*Indicates factory selected value

Table 6-3. List of Manufacturers' Codes

Mfr Code	Manufacturer Name	Address		Zip Code
00000	ANY SATISFACTORY SUPPLIER			
01121	ALLEN-BRADLEY CO	MILWAUKEE	WI	53204
01295	TEXAS INSTR INC SEMICOND CMPNT DIV	DALLAS	TX	75222
0192B	RCA CORP SOLID STATE DIV	SOMERVILLE	NJ	08876
03508	GE CO SEMICONDUCTOR PROD DEPT	SYRACUSE	NY	13201
03888	KDI PYROFILM CORP	WHIPPANY	NJ	07981
04713	MOTOROLA SEMICONDUCTOR PRODUCTS	PHOENIX	AZ	85062
07263	FAIRCHILD SEMICONDUCTOR DIV	MOUNTAIN VIEW	CA	94042
19701	MEPCO/ELECTRA CORP	MINERAL WELLS	TX	76067
24046	TRANSITRON ELECTRONIC CORP	WAKEFIELD	MA	01880
24546	CORNING GLASS WORKS (BRADFORD)	BRADFORD	PA	16701
27167	CORNING GLASS WORKS (WILMINGTON)	WILMINGTON	NC	28401
28480	HEWLETT-PACKARD CO CORPORATE HQ	PALO ALTO	CA	94304
30983	MEPCO/ELECTRA CORP	SAN DEIGO	CA	92121
32997	BOURNS INC TRIMPOT PROD DIV	RIVERSIDE	CA	92507
56289	SPRAGUE ELECTRIC CO	NORTH ADAMS	MA	01247
74100	BUSSMAN MFG DIV OF MCGRAW-EDISON CO	ST LOUIS	MO	63107
72136	ELECTRO MOTIVE CORP SUB IEC	WILLIMANTIC	CT	06226
72982	ERIE TECHNOLOGICAL PRODUCTS INC	ERIE	PA	16512
73138	BECKMAN INSTRUMENTS INC HELIPOT DIV	FULLERTON	CA	92634
75915	LITTLEFUSE INC	DES PLAINES	IL	60016
84411	TRW CAPACITOR DIV	OGLLALALA	NE	69153

SECTION VII

MANUAL CHANGES

7-1. INTRODUCTION.

7-2. This section normally contains information for adapting this manual to instruments for which the content does not apply directly. Since this manual does apply directly to all instruments up to the serial number listed on the title page, no change information is given here. Refer to INSTRUMENTS COVERED BY MANUAL in Section I for additional important information about serial number coverage.

REFER TO ANSI Y 32.2 AND Y32.14 FOR SCHEMATIC SYMBOLS NOT LISTED IN THIS TABLE.

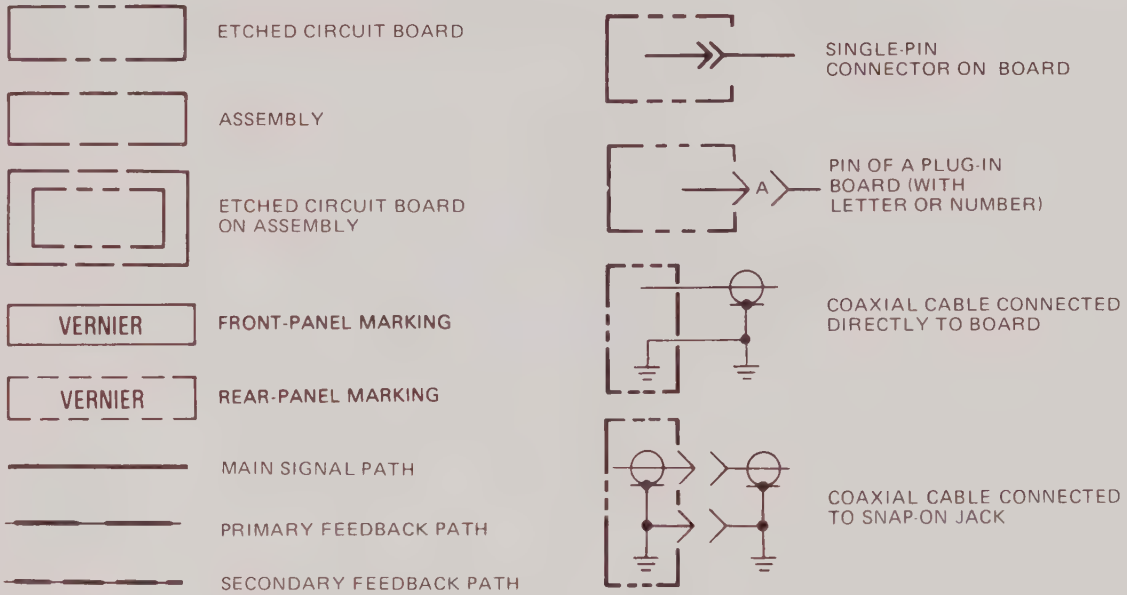

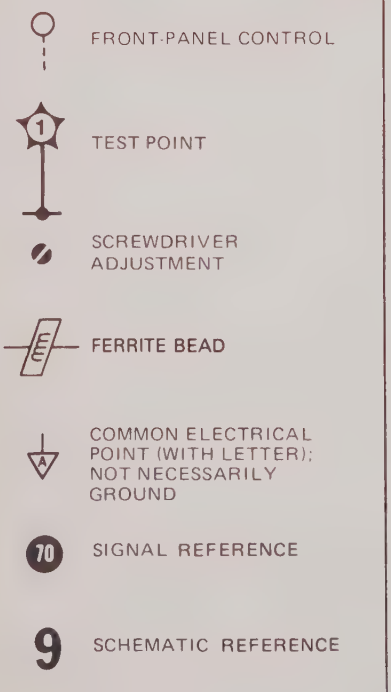

925 WIRE COLORS ARE GIVEN BY ENCLOSED NUMBERS USING THE RESISTOR COLOR CODE

[925 IS WHT-RED-GRN]

0 - BLACK	5 - GREEN
1 - BROWN	6 - BLUE
2 - RED	7 - VIOLET
3 - ORANGE	8 - GRAY
4 - YELLOW	9 - WHITE

* OPTIMUM VALUE SELECTED AT FACTORY, TYPICAL VALUE SHOWN; PART MAY HAVE BEEN OMITTED.

UNLESS OTHERWISE INDICATED ALL LOGIC ELEMENTS ARE OF THE TTL LOGIC FAMILY

UNLESS OTHERWISE INDICATED: RESISTANCE IN OHMS, CAPACITANCE IN PICOFARADS AND INDUCTANCE IN MICROHENRIES

CW	CLOCKWISE END OF VARIABLE RESISTOR
NC	NO CONNECTION
P/O	PART OF

VF (A)
V - VOLTAGE
F - FILTERED
(A) - FILTER SOURCE

Figure 8-1. Schematic Diagram Symbols

SECTION VIII

SERVICE

8-1. INTRODUCTION.

8-2. This section provides instructions for troubleshooting and repairing the Model 1310B X-Y Display.

8-3. Detailed theory of operation and troubleshooting information are located opposite the schematics on foldout Service Sheets. The remainder of this section has general service information that should help you quickly service and repair the X-Y display.

8-4. THEORY OF OPERATION.

8-5. Overall theory of operation appears on pages opposite the block diagram (Service Sheet 1). Each section of the diagram refers to service sheets where detailed theory, schematics, and troubleshooting information are presented. Figure 8-1 explains any unusual symbols that appear on the schematics.

8-6. TROUBLESHOOTING.

WARNING

Read the Safety Summary at the front of this manual before troubleshooting the instrument.

8-7. INITIAL TROUBLESHOOTING PROCEDURE. Before troubleshooting the 1310B in detail, try to perform the adjustment procedures listed in Section V of this manual. Some apparent malfunctions may be corrected by these adjustments, or failure to obtain a correct adjustment will often reveal the source of trouble.

NOTE

Before performing any troubleshooting procedure, eliminate static charge from glass of the CRT faceplate by solidly grounding one hand while rubbing the CRT faceplate with the other hand.

8-8. DC VOLTAGES AND WAVEFORMS. DC voltages, waveforms, and conditions for making these measurements are given on, or adjacent to schematics on the service sheets. Since conditions for making measurements may differ from one circuit to another, always check the specific conditions listed for each schematic.

8-9. RECOMMENDED TEST EQUIPMENT.

8-10. Test equipment required to maintain the 1310B is listed in Section I, table 1-4. Equipment other than that listed may be used if it meets the listed critical specifications.

8-11. REPAIR.

8-12. ASSEMBLY REMOVAL. Instructions for removing major assemblies are contained in the service sheet instructions for that particular assembly. Before servicing the instrument, remove top and bottom covers. Refer to table 8-1 for the list of assemblies indexed to Service Sheets.

Table 8-1. Service Sheet Quick Reference

Assembly	Name	Service Sheet(s)
A1	X-input Amplifier	2
A2	X-output Amplifier	3
A3	Y-input Amplifier	2
A4	Y-output Amplifier	3
A5	Z-axis Amplifier	4
A6	Dynamic Focus and Astigmatism	5; 6
A7	Left Connector Board	9
A8	Right Connector Board	9
A9	High Voltage Power Supply	7
A10	High Voltage Multiplier	7
A11	Low Voltage Power Supply	8
A12	Line Module	8
A13	Control Assembly	2; 4; 7
A14	Extender Board	N/A

8-13. PREVENTIVE MAINTENANCE. Painted surfaces can be cleaned with a commercial, spray-type window cleaner or with a mild soap and water solution.

CAUTION

Do not use chemical cleaning agents that might damage the plastics used in this instrument. Recommended cleaning agents are isopropyl alcohol, kelite (1 part kelite, 20 parts water), or a solution of 1% mild detergent and 99% water.

8-14. Corroded spots are best removed with soap and water. Stubborn residues can be removed with a fine abrasive. Protect such areas from further corrosion with an application of silicone resin such as GE DRIFILM 88.

8-15. CIRCUIT BOARDS.

8-16. BOARD CONNECTIONS. Square-pin connectors are identified on circuit boards by color code of connecting wire or by the signal name. Connector pins on plugs and jacks are identified by either a number of a letter. Coaxial wires are identified by different shrink-tubing colors.

8-17. SERVICING ETCHED CIRCUIT BOARDS. All the etched circuit boards have plated-through component holes. This allows components to be removed or replaced from either side of the board. When unsoldering large components such as potentiometers, rotate the soldering iron tip from lead to lead while applying pressure to the part to lift it from the board. HP Service Note M-20E contains additional information for repair of circuit boards.

8-18. SERVICE SHEET 1 BASIC PRINCIPLES OF OPERATION.

8-19. GENERAL.

The following paragraphs contain functional descriptions keyed to the simplified block diagram on the opposite page. The block diagram is drawn for function and does not show circuit details. Circuit details and circuit description are located on the schematics following the block diagram (schematic 1). Refer to table 8-1 for schematic identification.

8-20. DEFLECTION AMPLIFIERS.

The X and Y amplifier circuits are identical. They amplify the input signals to the necessary level to drive the CRT horizontal and vertical deflection plates. Each amplifier can be connected for positive, negative, or differential input with the input impedance selectable for 10 kohms or 50 ohms.

8-21. Z-AXIS AMPLIFIER.

The high voltage supply for the CRT grid is controlled by the Z-axis amplifier output level. Consequently, the voltage applied to the Z-INPUT controls the CRT beam intensity. The Z-axis amplifier can be connected to permit blanking by either a positive or negative voltage at the Z-INPUT.

8-22. PHOSPHOR PROTECTION.

The phosphor protection circuits prevent CRT phosphor by high intensity or a static slow moving beam. When a low frequency signal, or the absence of an input signal, is detected by either X or Y phosphor protection circuit, the output of the Z-axis amplifier is limited to approximately +18 V. This action in turn limits CRT grid drive. In some system applications, automatic beam current limiting may not be desirable. In such cases the phosphor protection circuit may be disabled by an internal switch (A8S1).

8-23. DYNAMIC FOCUS AND ASTIGMATISM.

The purpose of the dynamic focus and astigmatism circuits is to provide optimum focus of the displayed signals over the entire screen. Samples from the X and Y deflection amplifiers, proportional to the CRT beam position, drive the focus and astigmatism circuits. The astigmatism element is directly controlled by the output of the astigmatism driver. The output of the focus amplifier is applied to the focus level translator on the high voltage power supply assembly where it establishes operating potential for the CRT focus grid.

8-24. LOW VOLTAGE POWER SUPPLY.

The low voltage power supply converts the ac line input to three regulated dc power supplies, +250 V, +15 V, and −15 V. The +250 V and the −15 V supplies are adjustable and the +15 V supply is referenced to the −15 V supply. A separate dc supply, approximately 21.5 V, is provided for the high voltage oscillator.

8-25. HIGH VOLTAGE POWER SUPPLY.

The high voltage power supply provides the high operating potentials for the CRT: ≅ −4550 V for the cathode, a grid voltage referenced to the cathode, CRT filament voltage, and a post-accelerator potential of ≅24 kV. The high voltage power supply also contains a focus level translator circuit which, along with the dynamic focus amplifier, automatically adjusts the beam focus with changes in intensity level.

NOTES

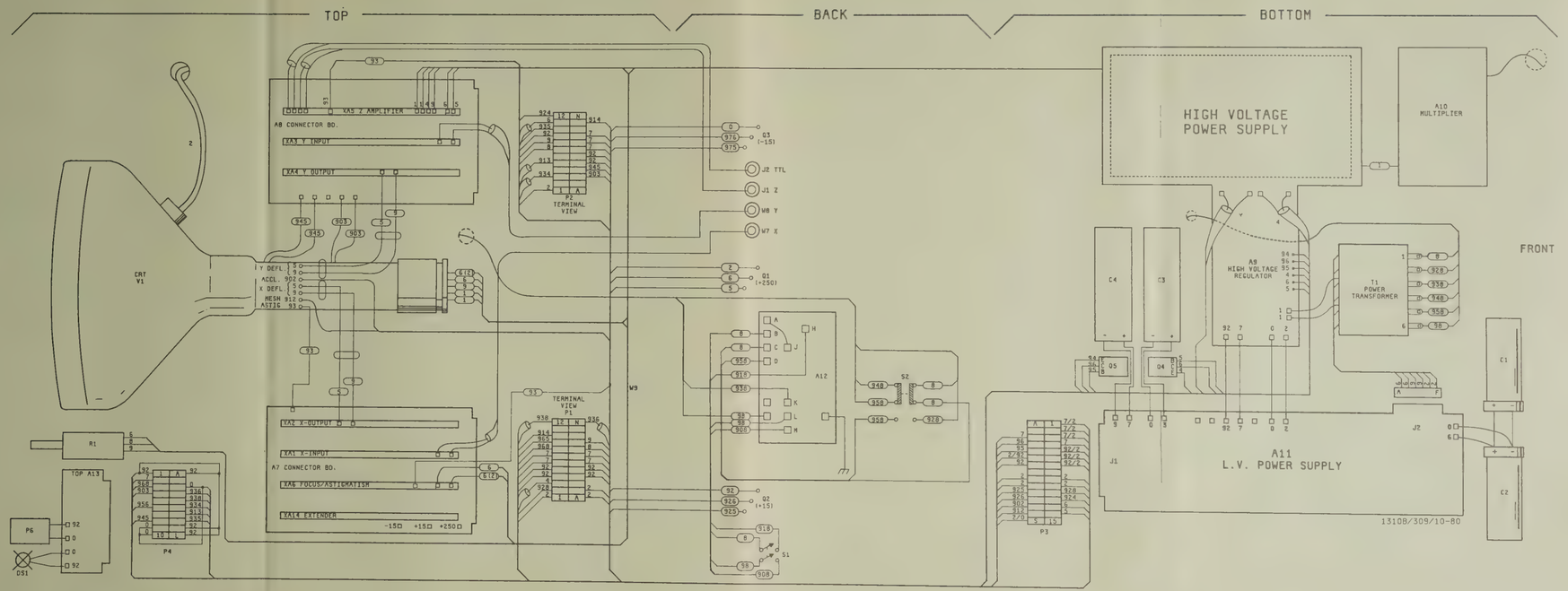

Figure 8-25.
Main Wiring Diagram

Product Line Sales Support Key

Key	Product Line
A	Analytical
CM	Components
C	Computer Systems
CP	Computer Systems Primary Service Responsible Office (SRO)
CS	Computer Systems Secondary SRO
E	Electronic Instruments & Measurement Systems
M	Medical Products
MP	Medical Products Primary SRO
MS	Medical Products Secondary SRO
P	Consumer Calculators
*	Sales only for specific product line
**	Support only for specific product line

IMPORTANT These symbols designate general product line capability They do not insure sales or support availability for all products within a line at all locations. Contact your local sales office for information regarding locations where HP support is available for specific products.

HP distributors are printed in italics

ANGOLA
Telectra
Empresa Tecnica de Equipamentos Electricos S A R L
R Barbosa Rodrigues 41 I DT
Caixa Postal 6487
LUANDA
Tel 35515 35516
A E M P*

ARGENTINA
Hewlett Packard Argentina S A
Avda Santa Fe 2035
Martinez 1640 **BUENOS AIRES**
Tel 798 6086 792 1293
Cable HEWPACKARG
A E CP P
Biotron S A C I y M
Avenida Paseo Colon 221
9 Piso
*1399 **BUENOS AIRES***
Tel 30 4846 30 1851 30 8384
34 9356 34 0460 34 4551
Telex 33 17595 BIONAR
Cable BIOTRON Argentina
M
Fate S A Electronica
Bartolome Mitre 833
*1036 **BUENOS AIRES***
Tel 74 41011 74 49277
74 43459
Telex 18137 22754
P

AUSTRALIA

Australia Capital Territory
Hewlett Packard Australia Pty Ltd
121 Wollongong Street
FYSHWICK A C T 2609
Tel 804 244
Telex 62650
Cable HEWPARD Canberra
A* CM CS E MS P

New South Wales
Hewlett Packard Australia Pty Ltd
17 23 Talavera Road
NORTH RYDE N S W 2113
P O Box 308
Tel 887 1611
Telex 21561
Cable HEWPARD Sydney
A CM CP E MS P

Queensland
Hewlett Packard Australia Pty Ltd
5th Floor
Teachers Union Building
495 499 Boundary Street
SPRING HILL Queensland 4000
Tel 229 1544
Telex 42133
Cable HEWPARD Brisbane
A CM CS E MS P

South Australia
Hewlett Packard Australia Pty Ltd
153 Greenhill Road
PARKSIDE S A 5063
Tel 272 5911
Telex 82536
Cable HEWPARD Adelaide
A* CM CS E MS P

Victoria
Hewlett Packard Australia Pty Ltd
31 41 Joseph Street
BLACKBURN Victoria 3130
Tel 89 6351
Telex 31 024
Cable HEWPARD Melbourne
A CM CP E MS P

Western Australia
Hewlett Packard Australia Pty Ltd
141 Stirling Highway
NEDLANDS W A 6009
Tel 386-5455
Telex 93859
Cable HEWPARD Perth
A CM CS E MS P

AUSTRIA
Hewlett Packard Ges m b h
Verkaufsbuero Graz
Grottenhofstrasse 94
A 8052 **GRAZ**
Tel 21 5 66
Telex 32375
CM C* E*
Hewlett Packard Ges m b h
Wehlistrasse 29
P O Box 7
A 1205 **VIENNA**
Tel 222 35 16 210
Telex 135823 135066
A CM CP E MS P

BAHRAIN
Green Salon
P O Box 557
BAHRAIN
Tel 5503
Telex 88419
P
Wael Pharmacy
P O Box 648
BAHRAIN
Tel 54886 56123
Telex 8550 WAEL GJ
M

BANGLADESH
The General Electric Co of Bangladesh Ltd
Magnet House 72
Dilkusha Commercial Area
***MOTIJHELL**, Dacca 2*
Tel 252415 252419
Telex 734
Cable GECDAC Dacca
A E M

BELGIUM
Hewlett Packard Belgium S A /N V
Boulevard de la Woluwe 100
Woluwedal
B 1200 BRUSSELS
Tel (02 762 32 00
Telex 23 494 B
A CM CP E MP P

BRAZIL
Hewlett Packard do Brasil I e C Ltda
Alameda Rio Negro 750
ALPHAVILLE 06400 Barueri SP
Tel 421 1311
Telex 011 23602 HPBR BR
Cable HEWPACK Sao Paulo
A CM CP E MS
Hewlett Packard do Brasil I e C Ltda
Rua Padre Chagas 32
90000 **PORTO ALEGRE** RS
Tel 22 2998 22 5621
Cable HEWPACK Porto Alegre
A* CM E MS P*
Hewlett Packard do Brasil I e C Ltda
Avenida Epitacio Pessoa 4664
20000 **RIO DE JANEIRO** RJ
Tel 286 0237
Telex 021 21905 HPBR BR
Cable HEWPACK Rio de Janeiro
A CM E MS P*

BURUNDI
Typomeca S P R L
B P 553
BUJUMBURA
Tel 2659
P

CANADA

Alberta
Hewlett Packard (Canada) Ltd
210 7220 Fisher Street S W
CALGARY Alberta T2H 2H8
Tel (403) 253 2713
Telex 610 821 6141
A CM CP E* MS P*
Hewlett Packard (Canada) Ltd
11620A 168th Street
EDMONTON Alberta T5M 3T9
Tel (403 452 3670
Telex 610 831 2431
A CM CP E MS P*

British Columbia
Hewlett Packard (Canada) Ltd
10691 Shellbridge Way
RICHMOND British Columbia V6X 2W7
Tel (604 270-2277
Telex 610-922 5059
A,CM CP E* MS,P*

Manitoba
Hewlett Packard (Canada) Ltd
380 550 Century Street
Saint James
WINNIPEG, Manitoba R3H 0L8
Tel (204 786 6701
Telex 610 671-3531
A CM CS E MS P*

Nova Scotia
Hewlett Packard (Canada) Ltd
P O Box 931
900 Windmill Road
DARTMOUTH, Nova Scotia B2Y 3Z6
Tel 902 469 7820
Telex 610 271 4482
CM CP E* MS P*

Ontario
Hewlett Packard (Canada) Ltd
552 Newbold Street
LONDON Ontario N6E 2S5
Tel 519) 686 9181
Telex 610 352 1201
A CM CS E* MS P*
Hewlett Packard (Canada) Ltd
6877 Goreway Drive
MISSISSAUGA Ontario L4V 1M8
Tel (416, 678 9430
Telex 610 492 4246
A CM CP E MP P
Hewlett Packard (Canada) Ltd
1020 Morrison Drive
OTTAWA Ontario K2H 8K7
Tel (613) 820 6483
Telex 610 563 1636
A CM CP E* MS P*

Quebec
Hewlett Packard (Canada) Ltd
275 Hymus Boulevard
POINTE-CLAIRE Quebec H9R 1G7
Tel (514 697 4232
Telex 610 422 3022
A CM CP E MP P*

CHILE
Jorge Calcagni y Cia Ltda
Arturo Burhle 065
Casilla 16475
*Correo 9 **SANTIAGO***
Tel 220222
Telex JCALCAGNI
A E M P
Olympia (Chile) Ltd
Rodrico de Araya 1045
Casilla 256 V
***SANTIAGO** 21*
Tel 25 50 44
Telex 40 565
P

COLOMBIA
Instrumentacion
H A Langebaek & Kier S A
Carrera 7 No 48 75
***BOGOTA** 2 DE*
Apartado Aereo 6287
***BOGOTA** 1 D E*
Tel 269 8877
Telex 44400
Cable AARIS Bogota
A,E M P
Instrumentacion
H A Langebaek & Kier S A
Edif Camacol Local 105
Carrera 63 NO 49 A 31
Apartado 54098
MEDELLIN
Tel 304475
A E,M,P

COSTA RICA
Cientifica Costarricense S A
Avenida 2 Calle 5
San Pedro de Montes de Oca
Apartado 10159
SAN JOSE
Tel 24 38 20 24 08 19
Telex 2367 GALGUR CR
Cable GALGUR
A E M P

CYPRUS
Kryponics
19 Gregorios Xenopoulos Street
P O Box 1152
NICOSIA
Tel 45628 45629
Telex 3018
E M P

CZECHOSLOVAKIA
Vyvojova a Provozni Zakladna
Vyzkumnych Ustavu v Bechovicich
*CSSR 25097 **BECHOVICE U PRAHY***
Tel 89 9341
Telex 12133
*P**
Hewlett Packard
Obchodni Zastupitelstvi v CSSR
Pisemny styk
Post schranka 27
*CS 118 01 **PRAHA 011***
Tel 66 296
Telex 121353 IHC
A C* E* M* P**

DENMARK
Hewlett Packard A/S
Datavej 52
DK 3460 **BIRKEROD**
Tel (02) 81 66 40
Telex 37409 hpas dk
A,CM CP E MS P
Hewlett Packard A/S
Navervej 1
DK 8600 **SILKEBORG**
Tel (06) 82 71 66
Telex 37409 hpas dk
CM CS E

ECUADOR
CYEDE Cia Ltda
P O Box 6423 CCI
Avenida Eloy Alfaro 1749
QUITO
Tel 450 975 243 052
Telex 2548 CYEDE ED
Cable CYEDE Quito
A E P
Hospitalar S A
Casilla 3590
Robles 625
QUITO
Tel 545 250 545 122
Cable HOSPITALAR Quito
M

EGYPT
Samitro
Sami Amin Trading Office
18 Abdel Aziz Gawish
ABDINE-CAIRO
Tel 24 932
P
International Engineering Associates
24 Hussein Hegazi Street
Kasr el Aini
CAIRO
Tel 23 829
Telex 93830
E M

EL SALVADOR
IPESA
Boulevard de los Heroes
Edificio Sarah 1148
SAN SALVADOR
Tel 252787
A C,E M,P*

ETHIOPIA
Abdella Abdulmalik
P O Box 2635
ADDIS ABABA
Tel 11-93-40
A E,M

FINLAND
Hewlett Packard Oy
Revontulentie 7
SF 02100 **ESPOO** 10
Tel (90) 455 0211
Telex 121563 hewpa sf
A,CM CP E MS,P

FRANCE
Hewlett Packard France
Le Ligoures
Bureau de Vente de Aix en Provence
Place Romee de Villeneuve
F 13090 **AIX-EN-PROVENCE**
Tel (42) 59-41 02
Telex 410770F
A CM CS E MS,P*
Hewlett Packard France
Bureau de Vente de Lyon
Chemin des Mouilles
Boite Postale No 162
F 69130 **ECULLY** Cedex
Tel (78) 33 81-25
Telex 310617F
A CM CP E,MP
Hewlett Packard France
Immeuble France Evry
Tour Lorraine
Boulevard de France
F 91035 **EVRY** Cedex
Tel (60) 77 96 60
Telex 692315F
CM E
Hewlett Packard France
Batiment Ampere
Rue de la Commune de Paris
Boite Postale 300
F 95153 **LE BLANC MESNIL**
Tel (01) 865 44 52
Telex 211032F
CM CP E MS
Hewlett Packard France
Avenue du President JF Kennedy
F 33700 **MERIGNAC**
Tel (56) 34 00 84
Telex 550105F
CM CP E MS
Hewlett Packard France
32 Rue Lothaire
F 57000 **METZ**
Tel (87) 65-53-50
CM,CS
Hewlett-Packard France
Avenue des Tropiques
Zone d'activities de Courtaboeuf
Boite Postale 6
F-91401 **ORSAY** Cedex
Tel (1) 907 78-25
Telex 600048F
A CM CP E MP P
Hewlett Packard France
15 Boulevard De L Amiral Bruix
F 75016 **PARIS**
Tel (01) 502 12 20
Telex 613663F
CM CP MS P
Hewlett-Packard France
2 Allee de la Bourgonelle
F 35100 **RENNES**
Tel (99) 51 42 44
Telex 740912F
CM,CS,E,MS,P*
Hewlett-Packard France
4 Rue Thomas Mann
F 67033 **STRASSBOURG** Cedex
Tel (88) 28 56 46
Telex 890141F
CM CS,E MS,P*
Hewlett-Packard France
20 Chemin de la Cepiere
31081 **TOULOUSE** Cedex
Tel (61) 40-11-12
Telex 531639F
A,CM,CS,E,P*
Hewlett-Packard France
Bureau de Vente de Lille
Immeuble Pericentre
Rue Van Gogh
F-59650 **VILLENEUVE D'ASQ**
Tel (20) 91-41-25
Telex 160124F
CM,CS,E,MS,P*

GERMAN FEDERAL REPUBLIC
Hewlett-Packard GmbH
Technisches Buro Berlin
Keithstrasse 2-4
D 1000 **BERLIN** 30
Tel (030) 24-90-86
Telex 018 3405 hpbln d
CM,CS,E,P
Hewlett Packard GmbH
Technisches Buro Boblingen
Herrenberger Strasse 110
D 7030 **BOBLINGEN**
Tel (07031) 667-1
Telex 07265739 bbn
A,CM,CP,E,MP,P
Hewlett-Packard GmbH
Technisches Buro Dusseldorf
Emanuel-Leutze Strasse 1
D 4000 **DUSSELDORF**
Tel (0211) 5971-1
Telex 085/86 533 hpdd d
A,CM,CP,E,MS,P
Hewlett-Packard GmbH
Vertriebszentrale Frankfurt
Berner Strasse 117
Postfach 560 140
D-6000 **FRANKFURT** 56
Tel (0611) 50-04-1
Telex (841) 04 13249 hpffm d
A,CM,CP,E,MP,P
Hewlett-Packard GmbH
Technisches Buro Hamburg
Kapstadtring 5
D-2000 **HAMBURG** 60
Tel (040) 63804-1
Telex 021 63 032 hphh d
A,CM,CP,E,MS,P
Hewlett-Packard GmbH
Technisches Buro Hannover
Am Grossmarkt 6
D-3000 **HANNOVER** 91
Tel (0511) 46-60-01
Telex 092 3259
A,CM,CS,E,MS,P
Hewlett Packard GmbH
Technisches Buro Nurnberg
Neumeyerstrasse 90
D 8500 **NURNBERG**
Tel (0911) 56-30-83
Telex 0623 860
CM,CS,E,MS,P
Hewlett Packard GmbH
Technisches Buro Munchen
Eschenstrasse 5
D-8021 **TAUFKIRCHEN**
Tel (089) 6117 1
Telex 0524985
A,CM,CP,E MS,P

GREAT BRITAIN
Hewlett-Packard Ltd
Trafalgar House
Navigation Road
ALTRINCHAM
Chesire WA14 1NU
Tel (061) 928 6422
Telex 668068
A,CM,CP,E*,MS
Hewlett Packard Ltd
Lorrilleaux Bolton Premises
Morely Road Staplehill
BRISTOL BS16 4QT
Tel (0272) 570743
CM,CS,MS
Hewlett-Packard Ltd
14 Wesley Street
CASTLEFORD
Yorkshire WF10 1AE
Tel (0977) 550016
Telex 5557355
CM,CP
Hewlett-Packard Ltd
9 Savoy Street
LONDON WC2R 0BA
Tel. 013797700
CM,CP
Hewlett-Packard Ltd
Fourier House
257-263 High Street
LONDON COLNEY, St Albans
Herts., AL21HA
Tel (0727) 24400
Telex 1-8952716
CM,CP,E,MS
Hewlett-Packard Ltd
Tradax House, St. Mary's Walk
MAIDENHEAD
Berkshire, SL6 1ST
Tel (0628) 39151
CM,CP
Hewlett-Packard Ltd
308/314 Kings Road
READING, Berkshire
Tel 61022
Telex 84-80-68
A,CM,E*,MS
Hewlett-Packard Ltd
Quadrangle
106-118 Station Road
REDHILL, Surrey RHI IPS
Tel (0737) 68655
A,CM,CP,E,MS,P
Hewlett-Packard Ltd
Westminster House
190 Stratford Road
SHIRLEY, **SOLIHULL**
West Midlands 890-3BJ
Tel (021) 7458800
Telex 339105
CM,CP,MS
Hewlett-Packard Ltd
King Street Lane
WINNERSH, Wokingham
Berkshire RG11 5AR
Tel (0734) 784774
Telex HEWPIE WINNERSH 847178
A,CM,E,MP,P

GREECE
Kostas Karaynnis
8 Omirou Street
***ATHENS** 133*
Tel 32-30-303, 32-37-371
Telex 21 59 62 RKAR GR
E,M,P
"Plaiso"
G Gerados
24 Stournara Street
ATHENS
Tel 36-11-160
Telex 21 9492
P

GUAM
Guam Medical Supply, Inc.
Jay Ese Bldg , Room 210
P O Box 8947
***TAMUNING** 96911*
Tel 6464513
Cable EARMED Guam
M,P

GUATEMALA
IPESA
Avenida Reforma 3-48
Zona 9
GUATEMALA CITY
Tel 316627, 314786, 664715
Telex 4192 Teltro Gu
A,C,E,M,P

HONG KONG
Hewlett-Packard Hong Kong, Ltd.
Room 105, Austin Center
1st Floor
21 Austin Avenue
TST P O Box 98524
KOWLOON, Hong Kong
Tel. 3-721143/8
Telex 36678 HEWPA HX
Cable PASIALTO Hong Kong
E,CP,P
Hewlett-Packard Hong Kong, Ltd
11th Floor,Four Seas Building
212 Nathan Road
P O Box 795
KOWLOON, Hong Kong
Tel 3697446
Telex 36678 HEWPA HX
Cable HEWPACK Hong Kong
E,CP,P
Schmidt & Co (Hong Kong) Ltd
Wing On Centre, 28th Floor
Connaught Road, C
HONG KONG
Tel 5-455644
Telex 74766 SCHMX HX
A,M

ICELAND
Elding Trading Company Inc.
Hafnarnvoli-Tryggvagotu
P O Box 895
IS-REYKJAVIK
Tel. 1-58-20, 1-63-03
M

INDIA
Blue Star Ltd
Bhavdeep
Stadium Road
***AHMEDABAD** 380 014*
Tel 42932
Telex 012-234
Cable BLUEFROST
E
Blue Star Ltd.
11 Magarath Road
***BANGALORE** 560 025*
Tel 55668
Telex 0845-430
Cable BLUESTAR
A,CM,C,E
Blue Star Ltd
Band Box House
Prabhadevi
***BOMBAY** 400 025*
Tel. 45-73-01
Telex 011-3751
Cable BLUESTAR
A,M
Blue Star Ltd
Sahas
414/2 Vir Savarkar Marg
Prabhadevi
***BOMBAY** 400 025*
Tel 46 65 55
Telex 011-4093
Cable FROSTBLUE
A,CM,C,E,M
Blue Star Ltd
7 Hare Street
***CALCUTTA** 700 001*
Tel 12-01-31
Telex 021-7655
Cable BLUESTAR
A,M
Blue Star Ltd
Meenakshi Mandiram
XXXXV/1379-2 Mahatma Gandhi Road
***COCHIN** 682-016*
Tel 32069
Telex 085-514
Cable BLUESTAR
*A**
Blue Star Ltd
133 Kodambakkam High Road
***MADRAS** 600 034*
Tel 82057
Telex 041-379
Cable BLUESTAR
A,M
Blue Star Ltd
Bhandari House, 7th/8th Floors
91 Nehru Place
***NEW DELHI** 110 024*
Tel: 682547, 682970
Telex 031-2463
Cable BLUESTAR
A,CM,C,E,M
Blue Star Ltd
1-1-117/1 Sarojini Devi Road
***SECUNDERABAD** 500 033*
Tel 70126
Telex 0155-459
Cable BLUESTAR
A,E
Blue Star Ltd
T C 7/603 Poornima
Maruthankuzhi
***TRIVANDRUM** 695 013*
Tel 65799
Telex 0884-259
Cable BLUESTAR
E

INDONESIA
BERCA Indonesia P.T.
P O.Box 496/Jkt
JL Abdul Muis 62
JAKARTA
Tel. 373009
Telex 46748 BERSAL IA
Cable BERSAL
A,E,M,P
BERCA Indonesia P T
J.L Jmento 23
SURABAYA
Tel 42027
Telex. 31146 BERSAL S D.
Cable BERCACON
A,E,M,P*

IRAQ
Hewlett-Packard Trading S A.
Mansoor City 9B/3/7
BAGHDAD
Tel 5514973
Telex 2455 HEPAIRAQ Ik
CP

IRELAND
Hewlett-Packard Ltd
Kestrel House
Clanwilliam Place
Lower Mount Street
DUBLIN 2. Eire
Tel 680424. 680426
Telex 30439
A,E,P*
Hewlett-Packard Ltd
2C Avongberg Ind Est
Long Mile Road
DUBLIN 12, Eire
Tel 514322, 514224
Telex 30439
A*,CP,E,MS,P*
Cardiac Services Ltd
Kilmore Road
Artane
***DUBLIN** 5, Eire*
Tel (01) 315820
M

ISRAEL
Electronics & Engineering Div
Motorola Israel Ltd.
16 Kremenetski Street
P O Box 25016
TEL-AVIV
Tel 338973
Telex 33569
Cable BASTEL Tel-Aviv
A,CM,C,E,M,P

ITALY
Hewlett-Packard Italiana S p.A
Via Martin Luther King, 38/III
I-40132 **BOLOGNA**
Tel (051) 402394
Telex 511630
CM,CS,E,MS
Hewlett-Packard Italiana S p A
Via G Di Vittorio 9
I-20063 **CERNUSCO SUL NAVIGLIO**
Tel (2) 903691
Telex 334632
A,CM,CP,E,MP,P
Hewlett-Packard Italiana S.p.A
Via Nuova san Rocco A Capadimonte, 62A
I-80135 **NAPOLI**
Tel (081) 7413544
A,CM,CS,E
Hewlett-Packard Italiana S.p.A.
Via Turazza 14
I-35100 **PADOVA**
Tel. (49) 664888
Telex 430315
A,CM,CS,E,MS
Hewlett-Packard Italiana S p.A.
Via G Armellini 10
I-00143 **ROMA**
Tel (06) 546961
Telex 610514
A,CM,CS,E,MS,P*
Hewlett-Packard Italiana S p A
Corso Giovanni Lanza 94
I-10133 **TORINO**
Tel: (011) 682245, 659308
Telex 221079
CM,CS E

JAPAN
Yokogawa-Hewlett-Packard Ltd
Inoue Building
1348-3, Asahi-cho
ATSUGI, Kanagawa 243
Tel (0462) 24-0451
CM,C*,E
Yokogawa-Hewlett-Packard Ltd
Kumagaya Ashai Building
4 Tusukuba, 3-chome
KUMAGAYA, Saitama 360
Tel (0485) 24-6563
CM,CS,E
Yokogawa-Hewlett-Packard Ltd
Mito Mitsui Building
4-73, San-no-maru, 1-chome
MITO, Ibaragi 310
Tel (0292) 25-7470
CM,CS,E
Yokogawa-Hewlett-Packard Ltd
Sumitomo Seimei Bldg
11-2 Shimo-sasajima-cho
Nakamura-ku
NAGOYA, Aichi 450
Tel (052) 581-1850
CM,CS,E,MS
Yokogawa-Hewlett-Packard Ltd
Chuo Bldg , 4TH FLOOR
54-20 Nishinakajima, 5-chome
Yodogawa-ku, Osaka-shi
OSAKA, 532
Tel (06) 304 6021
Telex 523-3624 YHPOSA
A,CM,CP,E,MP,P*
Yokogawa-Hewlett-Packard Ltd
29-21 Takaido-Higashi 3-chome
Suginami-ku **TOKYO** 168
Tel. (03) 331-6111
Telex 232-2024 YHPTOK
Cable YUHPMARKET TOK23 724
A,CM,CP,E,MP,P*
Yokogawa-Hewlett-Packard Ltd
Tanigawa Building
2-24-1 Tsuruya-cho
Kanagawa-ku
YOKOHAMA, Kanagawa 221
Tel (045) 312-1252
Telex 382-3204 YHP YOK
CM,CS,E

JORDAN
Mouasher Cousins Company
P O Box 1387
AMMAN
Tel 21456, 24907, 39907
Telex 21456 SABCO JO
E,M,P

KENYA
International Aeradio (E.A.) Ltd.
P O Box 95221
[illegible]
M
ADCOM Ltd , Inc.
City House, Wabera Street
P O Box 30635
NAIROBI
Tel 331955
Telex 22639
A,E,M*
International Aeradio (E A.) Ltd
P O Box 19012
Nairobi Airport
NAIROBI
Tel 336055, 336056
Telex 22201, 22301
M

KOREA
Samsung Electronics
C.P O 2775
SEOUL
Tel 8334311, 8330002, 8330006
Telex SAMSAN 27364
A,C,E,M,P

KUWAIT
Al-Khaldya Trading & Contracting
P O Box 830 Safat
KUWAIT
Tel: 42-4910, 41-1726
Telex 2481 Areeg kt
A,E,M
Photo & Cine Equipment
P O Box 270 Safat
KUWAIT
Tel. 42-2846, 42-3801
Telex 2247 Matin
P

LUXEMBOURG
Hewlett-Packard Belgium S A./N V
Boulevard de la Woluwe 100
Woluwedal
B 1200 **BRUSSELS**
Belgium
Tel 762/32/00
Telex 23-494 paloben bru
A,CP,E,MP,P

MALAYSIA
Hewlett-Packard Sales (Malaysia) Sdn Bhd
Suite 2 21/2 22
Bangunan Angkasa Raya
Jalan Ampang
KUALA LUMPUR
Tel 483544
Telex MA31011
A,CP,E,M,P*
Protel Engineering
P O Box 1917
Lot 319, Satok Road
*Kuching, **SARAWAK***
Tel 53544
Telex MA 70904 PROMAL
Cable PROTELENG
A,E,M

MEXICO
Hewlett-Packard Mexicana, S A de C V
Av Periferico Sur No 6501
Tepepan, Xochimilco
MEXICO CITY 23, D.F.
Tel (905) 676-4600
Telex 017-74-507
A,CP,E,MS,P
Hewlett-Packard Mexicana, S A de C V
Rio Volga #600 Colonia del Valle
MONTERREY, N L
Tel 78-42-93, 78-42-40, 78-42-41
Telex 038-410
CS

MOROCCO
Dolbeau
81 rue Karatchi
CASABLANCA
Tel: 3041-82, 3068-38
Telex 23051, 22822
E
Gerep
2 rue d'Agadir
Boite Postale 156
CASABLANCA
Tel: 272093, 272095
Telex 23 739
P

MOZAMBIQUE
A N Goncalves Ltd
162, 1° Apt 14 Av D Luis
Caixa Postal 107
MAPUTO
Tel 27091, 27114
Telex 6-203 NEGON Mo
Cable NEGON
A,E,M,P

NETHERLANDS
Hewlett-Packard Nederland B V
Van Heuven Goedhartlaan 121
NL 1181KK **AMSTELVEEN**
Tel: (20) 47-20-21
Telex 13 216
A,CM,CP,E,MP,P
Hewlett-Packard Nederland B V
Bongerd 2
NL2906 VK **CAPELLE** A/D Ijssel
Tel: (10) 51-64-44
Telex 21261 hepac nl
A,CM,CP

NEW ZEALAND
Hewlett-Packard (N Z) Ltd
169 Manukau Road
P O Box 26-189
Epsom, **AUCKLAND**
Tel 68 7159
Cable HEWPACK Auckland
CM,CS,E,P*
Northrop Instruments & Systems Ltd
Eden House, 44 Khyber Pass Road
P O Box 9682
*Newmarket, **AUCKLAND***
Tel 794-091
A,M
Northrop Instruments & Systems Ltd
Terrace House, 4 Oxford Terrace
P O Box 8388
CHRISTCHURCH
Tel 64-165
A,M
Hewlett-Packard (N Z) Ltd.
4-12 Cruickshank Street
P O Box 9443
Kilbirnie, **WELLINGTON** 3
Tel 877-199
Cable HEWPACK Wellington
CM,CP,E,P
Northrop Instruments & Systems Ltd
Sturdee House
85-87 Ghuznee Street
P O Box 2406
WELLINGTON
Tel 850-091
Telex NZ 31296
A,M

NIGERIA
The Electronics Instrumentations Ltd
N6B/770 Oyo Road
Oluseun House
P M B 5402
IBADAN
Tel 461577
Telex 31231 TEIL NG
A,E,M,P
The Electronics Instrumentations Ltd
144 Agege Motor Road, Mushin
P O Box 6645
*Mushin, **LAGOS***
A,E,M,P

NORTHERN IRELAND
Cardiac Services Company
95A Finaghy Road South
***BELFAST** BT 10 0BY*
Tel (0232) 625-566
Telex 747626
M

NORWAY
Hewlett-Packard Norge A/S
Nygaardsgaten 114
P O Box 4210
N-5013 Nygaardsgaten, **BERGEN**
Tel: (05) 21-97-33
Telex 16621 hpnas n
CM,CS,E
Hewlett-Packard Norge A/S
Oestendalen 18
P O Box 34
N-1345 **OESTERAAS**
Tel (02) 17-11-80
Telex. 16621 hpnas n
A*,CM,CP,E,MS,P

OMAN
Khimjl Ramdas
P O Box 19
MUSCAT
Tel 72-22-17, 72-22-25
Telex 3289 BROKER MB MUSCAT
P

PAKISTAN
Mushko & Company Ltd
10, Bazar Road
Sector G-6/4
ISLAMABAD
Tel 28624
Cable FEMUS Rawalpindi
A,E,M,P
Mushko & Company Ltd
Oosman Chambers
Abdullah Haroon Road
***KARACHI** 0302*
Tel. 511027, 512927
Telex 2894 MUSHKO PK
Cable COOPERATOR Karachi
*A,E,M,P**

PANAMA
Electronico Balboa, S A
Apartado 4929
Panama 5
Calle Samuel Lewis
Edificio "Alfa" No 2
CIUDAD DE PANAMA
Tel 64-2700
Telex 3480380
Cable ELECTRON Panama
A,E,M,P
Foto Internacional, S A
P O Box 2068
Free Zone of Colon
COLON 3
Tel 45-2333
Telex 3485126
Cable IMPORT COLON/Panama
P

PERU
Compania Electro Medica S A.
Los Flamencos 145, San Isidro
Casilla 1030
***LIMA** 1*
Tel 41-4325
Telex Pub Booth 25424 SISIDRO
Cable ELMED Lima
A,E,M,P

PHILIPPINES
The Online Advanced Systems Corporation
Rico House, Amorsolo Cor Herrera Street
Legaspi Village, Makati
P O Box 1510
*Metro **MANILA***
Tel 85-35-81, 85-34-91, 85-32-21
Telex 3274 ONLINE
A,C,E,M
Electronic Specialists and Proponents Inc
690-B Epifanio de los Santos Avenue
*Cubao **QUEZON CITY***
P O Box 2649 Manila
Tel 98-96-81, 98-96-82, 98-96-83
Telex 742-40287
Cable ESPINC MANILA
P

POLAND
Buro Informacji Technicznej
Hewlett Packard
Ul Slawki 2, 6P
*PL00 950 **WARSZAWA***
Tel 39-59-62, 39-67 43
Telex 81 24 53
A,C,E*,M*,P**

PORTUGAL
Telectra-Empresa Tecnica de Equipmentos Electricos S a r l
Rua Rodrigo da Fonseca 103
P O Box 2531
*P **LISBON** 1*
Tel (19) 68-60-72
Telex 12598
A,C,E,P
Mundinter
Intercambio Mundial de Comercio S a r l
P O Box 2761
Avenida Antonio Augusto de Aguiar 138
*P **LISBON***
Tel (19) 53-21-31, 53-21-37
Telex 16691 munter p
M

PUERTO RICO
Hewlett-Packard Puerto Rico
Calle 272
#203 Urb Country Club
RIO PIEDRAS, Puerto Rico 00924
Tel (809) 762-7255
Telex 345 0514
A,CP

QATAR
Business Communications Qatar
P O Box 3656
DOHA
Tel 5851
Telex 4454
P
Nasser Trading & Contracting
P O Box 1563
[illegible]
Tel 22170
Telex 4439 NASSER
M

RHODESIA
Field Technical Sales
45 Kelvin Road North
P O Box 3548
SALISBURY
Tel 705231
Telex RH 4122
A,E,M,P

ROMANIA
Hewlett-Packard Reprezentanta
Boulevard Nicolae Balcescu 16
BUCURESTI
Tel 130725
Telex 10440
C,E**

SAUDI ARABIA
Modern Electronic Establishment
P O Box 193
AL-KHOBAR
Tel 44-678, 44-813
Telex 670136
Cable ELECTA AL KHOBAR
C,E,M,P
Modern Electronic Establishment
P O Box 1228, Baghdadiah Street
JEDDAH
Tel 27-798
Telex 401035
Cable ELECTA JEDDAH
C,E,M,P
Modern Electronic Establishment
P O Box 2728
RIYADH
Tel 62-596 66-232
Telex 202049
C,E,M,P

SCOTLAND
Hewlett-Packard Ltd
Royal Bank Buildings
Swan Street
BRECHIN, Angus, Scotland
Tel 3101, 3102
CM,CS
Hewlett-Packard Ltd
SOUTH QUEENSFERRY
West Lothian, EH30 9TG
GB-Scotland
Tel (031) 3311000
Telex 72682
CM,CP,E,MS

SINGAPORE
Hewlett-Packard Singapore (Pte) Ltd
6th Floor, Inchcape House
450-452 Alexandra Road
SINGAPORE 0511
P O Box 58 Alexandra Post Office
Singapore 9115
Tel 631788
Telex HPSGSO RS 32409
Cable HEWPACK, Singapore
A,CP,E,MS,P

SOUTH AFRICA
Hewlett-Packard South Africa (Pty) Ltd
Pine Park Center
Forest Drive, Pinelands
CAPE PROVINCE 7405
P O Box 120
Howard Place
CAPE PROVINCE 7450
Tel 53-7955, 53 7956, 53-7957, 53-7958, 53-7959
Telex 57-0006
A,CM,CS E,MS,P
Hewlett-Packard South Africa (Pty) Ltd
P O Box 37066
Overport
DURBAN 4067
Tel 28-4178, 28 4179, 28-4110
CM CS
Hewlett-Packard South Africa (Pty) Ltd
Hewlett-Packard Centre
Daphne Street
Private Bag Wendywood
SANDTON 2144
Tel 802-5111
Telex 84782
Cable HEWPACK Johannesburg
A CM,CP E,MS,P

SPAIN
Hewlett-Packard Espanola S A
c/Entenza 312
E **BARCELONA** 29
Tel (3) 322-24 51, 321-73-54
Telex 52603 hpbe e
A,CM,CP,E,MS,P
Hewlett-Packard Espanola S A
c/San Vicente s/n
Edificio Albia II, 7°B
E **BILBAO** 1
Tel 423 82-06, 423-83 06
A,CM,E,MS
Hewlett-Packard Espanola S A
Calle Jerez 3
E **MADRID** 16
Tel (1) 458 2600
Telex 23515 hpe
A,CM,E MP,P
Hewlett-Packard Espanola S A
Colonia Mirasierra
Edificio Juban
c/o Costa Brava 13
E **MADRID** 34
Tel (1) 734 8061, 734-1162
CM,CP
Hewlett-Packard Espanola S A
Av Ramon y Cajal 1
Edificio Sevilla 1, Planta 9
E **SEVILLA** 5
Tel (954) 64-44-54, 64-44-58
A,CM,CS,MS,P
Hewlett-Packard Espanola S A
C/Ramon Gordillo 1 (Entlo)
E **VALENCIA** 10
Tel (96) 361 1354
CM,CS,P

SRI LANKA
Metropolitan Agencies Ltd
209/9 Union Place
***COLOMBO** 2*
Tel 35947
Telex 1377METROLTD CE
Cable METROLTD
A,E,M,P

SUDAN
Radison Trade
P O Box 921
KHARTOUM
Tel 44048
Telex 375
A E,M

SURINAM
Surtel Radio Holland N V
Grote Hofstr 3-5
P O Box 155
PARAMARIBO
Tel 72118, 77880
Cable Surtel
E,M

SWEDEN
Hewlett-Packard Sverige AB
Enighetsvagen 3
S-16120 **BROMMA**
Tel (08) 730-0550
Telex (854) 10721 MESSAGES
Cable MEASUREMENTS
A,CM,CP,E,MS,P
Hewlett-Packard Sverige AB
Sunnanvagen 14K
S 22226 **LUND**
Tel (46) 13-69-79
CM CS
Hewlett-Packard Sverige AB
Vastra Vintergatan 9
S-70344 **OREBRO**
Tel (019) 14-07 20
CM,CS
Hewlett-Packard Sverige AB
Frotallisgatan 30
S-42132 **VASTRA-FROLUNDA**
Tel (031) 49-09 50
Telex 85410721
CM,CS,E,P

SWITZERLAND
Hewlett-Packard (Schweiz) AG
Clarastrasse 12
CH 4058 **BASEL**
Tel (061) 33 59-20
A CM
Hewlett-Packard (Schweiz) AG
Bahnhoherweg 44
3018 **BERN**
Tel (031) 56-24-22
CM
Hewlett-Packard (Schweiz) AG
47 Avenue Blanc
CH 1202 **GENEVA**
Tel (022) 32-30-05, 32-48 00
CM CP
Hewlett-Packard (Schweiz) AG
29 Chemin Chateau Bloc
CH-1219 **LE LIGNON**-Geneva
Tel (022) 96-03-22
Telex 27333 hpag ch
Cable HEWPACKAG Geneva
A CM,E,MS,P
Hewlett-Packard (Schweiz) AG
Zurcherstrasse 20
P O Box 307
CH 8952 **SCHLIEREN** Zurich
Tel (01) 730 5240 730-1821
Telex 53933 hpag ch
Cable HPAG CH
A,CM,CP E,MS,P

SYRIA
General Electronic Inc
Nuri Basha Ahnaf Ebn Kays Street
P O Box 5781
DAMASCUS
Tel 33-24-87
Telex 11215 ITIKAL
Cable ELECTROBOR DAMASCUS
E
Sawah & Co
Place Azme
Boite Postale 2308
DAMASCUS
Tel 16-367, 19-697, 14-268
Telex 11304 SATACO SY
Cable SAWAH, DAMASCUS
M
Suleiman Hilal El Mlawi
P O Box 2528
Mamoun Bitar Street 56 58
DAMASCUS
Tel 11-46 63
Telex 11270
Cable HILAL DAMASCUS
M

TAIWAN
Hewlett-Packard Far East Ltd
Kaohsiung Branch
68-2, Chung Cheng 3rd Road
Shin Shin, Chu
KAOHSIUNG
Tel 241 2318 261-3253
CS,E MS,P
Hewlett Packard Far East Ltd
Taiwan Branch
Bank Tower, 5th Floor
205 Tun Hwa North Road
TAIPEI
Tel 751 0404
Cable HEWPACK Taipei
A*,CP,E,MS P
San Kwang Instruments Co , Ltd
20 Yung Sui Road
TAIPEI
Tel 361 5446, 361 5447
361 5448 361 5449
Telex 22894 SANKWANG
Cable SANKWANG Taipei
M

TANZANIA
International Aeradio (E A) Ltd
P O Box 861
DAR ES SALAAM
Tel 21251
Telex 41030
M

THAILAND
UNIMESA Co Ltd
Elcom Research Building
2538 Sukhumvit Ave
*Bangchak, **BANGKOK***
Tel 393-2387 393 0338
Telex TH81160, 82938, 81038
Cable UNIMESA Bangkok
A,E M
Bangkok Business Equipment Ltd
5/5-6 Dejo Road
BANGKOK
Tel 234-8670 234-8671
234 8672, 234 8673
Cable BUSIQUIPT Bangkok
P

TRINIDAD & TOBAGO
CARTEL
Caribbean Telecoms Ltd
P O Box 732
50/A Jerningham Avenue
PORT-OF-SPAIN
Tel 62 4214, 62 4213
A,E,M,P

OPERATING AND SERVICE MANUAL

MODEL 1311B
X-Y DISPLAY

(Including Options 001, 002, 003, 004, 330, 604, 639, 900, 901, 902, 904, 905, 906, 910, 912)

SERIAL NUMBERS

This manual applies directly to instruments with serial numbers prefixed **2347A**.

With changes described in Section VII, this manual also applies to instruments with serial prefixes **1943A**, **2140A**, **2211A** and **2226A**.

For additional important information about serial numbers, see INSTRUMENTS COVERED BY MANUAL in Section I.

© COPYRIGHT HEWLETT-PACKARD COMPANY/COLORADO SPRINGS DIVISION 1983
1900 GARDEN OF THE GODS ROAD, COLORADO SPRINGS, COLORADO, U.S.A.

ALL RIGHTS RESERVED

Manual Part Number 01311-90920
Microfiche Part Number 1311-90820

PRINTED: NOVEMBER 1983

SAFETY

This product has been designed and tested according to International Safety Requirements. To ensure safe operation and to keep the product safe, the information, cautions, and warnings in this manual must be heeded. Refer to Section I and the Safety Summary for general safety considerations applicable to this product.

CERTIFICATION

Hewlett-Packard Company certifies that this product met its published specifications at the time of shipment from the factory. Hewlett-Packard further certifies that its calibration measurements are traceable to the United States National Bureau of Standards, to the extent allowed by the Bureau's calibration facility, and to the calibration facilities of other International Standards Organization members.

WARRANTY

This Hewlett-Packard product is warranted against defects in material and workmanship for a period of one year from date of shipment. During the warranty period, Hewlett-Packard Company will, at its option, either repair or replace products which prove to be defective.

The cathode-ray tube (CRT) in the instrument and any replacement CRT purchased from HP are also warranted against electrical failure for a period of one year from the date of shipment from Colorado Springs. BROKEN TUBES AND TUBES WITH PHOSPHOR OR MESH BURNS, HOWEVER, ARE NOT INCLUDED UNDER THIS WARRANTY.

For warranty service or repair, this product must be returned to a service facility designated by HP. However, warranty service for products installed by HP and certain other products designated by HP will be performed at Buyer's facility at no charge within the HP service travel area. Outside HP service travel areas, warranty service will be performed at Buyer's facility only upon HP's prior agreement and Buyer shall pay HP's round trip travel expenses.

For products returned to HP for warranty service, Buyer shall prepay shipping charges to HP and HP shall pay shipping charges to return the product to Buyer. However, Buyer shall pay all shipping charges, duties, and taxes for products returned to HP from another country.

LIMITATION OF WARRANTY

The foregoing warranty shall not apply to defects resulting from improper or inadequate maintenance by Buyer, Buyer-supplied software or interfacing, unauthorized modification or misuse, operation outside of the environmental specifications for the product, or improper site preparation or maintenance.

NO OTHER WARRANTY IS EXPRESSED OR IMPLIED. HP SPECIFICALLY DISCLAIMS THE IMPLIED WARRANTIES OF MERCHANTABILITY AND FITNESS FOR A PARTICULAR PURPOSE.

EXCLUSIVE REMEDIES

THE REMEDIES PROVIDED HEREIN ARE BUYER'S SOLE AND EXCLUSIVE REMEDIES. HP SHALL NOT BE LIABLE FOR ANY DIRECT, INDIRECT, SPECIAL, INCIDENTAL, OR CONSEQUENTIAL DAMAGES, WHETHER BASED ON CONTRACT, TORT, OR ANY OTHER LEGAL THEORY.

ASSISTANCE

Product maintenance agreements and other customer assistance agreements are available for Hewlett-Packard products.

For any assistance, contact your nearest Hewlett-Packard Sales and Service Office. Addresses are provided at the back of this manual.

S C W & A 9/78 (CRT)

X-RAY RADIATION NOTICE

ACHTUNG

Model 1311B

WARNING

Während des Betriebs erzeugt dieses Gerät Röntgenstrahlung. Das Gerät ist so abgeschirmt, daß die Dosisleistung weniger als 36 pA/kg (0,5 mR/h) in 5cm Abstand von der Oberfläche der Katodenstrahlröhre beträgt. Somit sind die Sicherheitsbestimmungen verschiedener Länder, u.A. der deutschen Röntgenverordnung eingehalten.

Die Stärke der Röntgenstrahlung hängt im Wesentlichen von der Bauart der Katodenstrahlröhre ab, sowie von den Spannungen, welche an dieser anliegen. Um einen sicheren Betrieb zu gewährleisten, dürfen die Einstellungen der Niederspannungs- und des Hochspannungsnetzteils nur nach der Anleitung in Kapitel V des Handbuches vorgenommen werden.

Die Katodenstrahlröhre darf nur durch die gleiche Type ersetzt werden. (Siehe Kapitel Vi für HP — Ersatzteile).

Das Gerät ist in Deutschland zugelassen unter der Nummer: BW/78/80/Rö

When operating, this instrument emits x-rays; however, it is well shielded and meets safety and health requirements of various countries, such as the X-ray Radiation Act of Germany.

Radiation emitted by this instrument is less than 0.5 mR/hr at a distance of five (5) centimeters from the surface of the cathode-ray tube. The x-ray radiation primarily depends on the characteristics of the cathode-ray tube and its associated low-voltage and high-voltage circuitry. To ensure safe operation of the instrument, adjust both the low-voltage and high-voltage power supplies as outlined in Section V of this manual (if applicable).

Replace the cathode-ray tube with an identical CRT only. Refer to Section VI for proper HP part number.

Number of German License: BW/78/80/Rö

SAFETY CONSIDERATIONS

GENERAL — This instrument has been designed and tested in accordance with IEC Publication 348, Safety Requirements for Electronic Measuring Apparatus, and has been supplied in a safe condition. The present instruction manual contains some information and warnings which have to be followed by the user to ensure safe operation and to retain the apparatus in safe condition.

OPERATION — BEFORE APPLYING POWER verify that the power transformer primary is matched to the available line voltage, the correct fuse is installed, and Safety Precautions are taken (see the following warnings). In addition, note the instrument's external markings which are described under "Safety Symbols."

WARNING

Servicing instructions are for use by service-trained personnel. To avoid dangerous electric shock, do not perform any servicing unless qualified to do so.

BEFORE SWITCHING ON THE INSTRUMENT, the protective earth terminal of the instrument must be connected to the protective conductor of the (mains) power cord. The mains plug shall only be inserted in a socket outlet provided with a protective earth contact. The protective action must not be negated by the use of an extension cord (power cable) without a protective conductor (grounding). Grounding one conductor of a two conductor outlet is not sufficient protection.

If this instrument is to be energized via an auto-transformer (for voltage reduction) make sure the common terminal is connected to the earth terminal of the power source.

Any interruption of the protective (grounding) conductor (inside or outside the instrument) or disconnecting the protective earth terminal will cause a potential shock hazard that could result in personal injury.

Whenever it is likely that the protection has been impaired, the instrument must be made inoperative and be secured against any unintended operation.

Only fuses with the required rated current, voltage, and specified type (normal blow, time delay, etc.) should be used. Do not use repaired fuses or short circuited fuseholders. To do so could cause a shock or fire hazard.

Do not operate the instrument in the presence of flammable gases or fumes. Operation of any electrical instrument in such an environment constitutes a definite safety hazard.

Do not install substitute parts or perform any unauthorized modification to the instrument.

Adjustments described in the manual are performed with power supplied to the instrument while protective covers are removed. Energy available at many points may, if contacted, result in personal injury.

Any adjustment, maintenance, and repair of the opened instrument under voltage should be avoided as much as possible, and when inevitable, should be carried out only by a skilled person who is aware of the hazard involved.

SAFETY SYMBOLS

Instruction manual symbol: the product will be marked with this symbol when it is necessary for the user to refer to the instruction manual in order to protect against damage to the product.

Indicates hazardous voltages.

Earth terminal (sometimes used in manual to indicate circuit common connected to grounded chassis).

WARNING

The WARNING sign denotes a hazard. It calls attention to a procedure, practice,or the like, which, if not correctly performed or adhered to, could result in personal injury. Do not proceed beyond a WARNING sign until the indicated conditions are fully understood and met.

CAUTION

The CAUTION sign denotes a hazard. It calls attention to an operating procedure, practice, or the like, which, if not correctly performed or adhered to, could result in damage to or destruction of part or all of the product. Do not proceed beyond a CAUTION sign until the indicated conditions are fully understood or met.

TABLE OF CONTENTS

Section		Page
I	GENERAL INFORMATION	1-1
1-1.	Introduction	1-1
1-3.	Specifications	1-1
1-5.	Safety Considerations	1-1
1-8.	Instruments Covered by Manual	1-1
1-13.	Description	1-2
1-15.	Special Features	1-2
1-16.	Dynamic Focus - Astigmatism	1-2
1-17.	Phosphor Protection	1-2
1-18.	Input Modifications	1-2
1-19.	Options	1-4
1-21.	Accessories Supplied	1-4
1-23.	Equipment Available	1-4
1-25.	Recommended Test Equipment	1-4
II	INSTALLATION	2-1
2-1.	Introduction	2-1
2-3.	Initial Inspection	2-1
2-5.	Preparation for Use	2-1
2-6.	Power Requirements	2-1
2-7.	AC Line Voltage	2-1
2-8.	AC Line Voltage Selection	2-1
2-9.	AC Power Cable	2-2
2-10.	Operating Environment	2-2
2-11.	Temperature	2-2
2-12.	Humidity	2-2
2-13.	Altitude	2-2
2-14.	Storage and Shipment	2-2
2-16.	Packaging	2-2
III	OPERATION	3-1
3-1.	Introduction	3-1
3-3.	Panel Features	3-1
3-5.	Controls and Connectors	3-1
3-7.	Input Impedance Switches	3-1
3-8.	Phosphor Protection	3-1
3-9.	Preoperational Procedure	3-1
3-11.	Interfacing Considerations	3-3
3-12.	General	3-3
3-13.	TTL Blanking	3-3
3-14.	Binary Gray Shade	3-3
3-15.	Option 003 (Intensity as Brightness)	3-3
3-16.	Attenuators	3-3
3-17.	Polarity	3-3
3-18.	Bandwidth Reduction	3-3
3-19.	Ringing	3-3
3-20.	Performance Factors	3-4
3-21.	Spot Size and Resolution	3-4
3-24.	Brightness	3-4
3-27.	Settling Time	3-5
3-28.	Linearity	3-5
3-29.	Operator Maintenance	3-5
IV	PERFORMANCE TESTS	4-1
4-1.	Introduction	4-1
4-3.	Equipment Required	4-1
4-5.	Test Record	4-1
4-7.	Calibration Cycle	4-1
4-10.	X-Y Amplifier Bandwidth	4-2
4-11.	X-Deflection Factor	4-3
4-12.	Y-Deflection Factor	4-4
4-13.	Repeatability	4-5
4-14.	Crosstalk	4-6
4-15.	Z-Axis Blanking Polarity	4-7
4-16.	Binary Gray Shade	4-8
4-17.	Settling Time	4-11
V	ADJUSTMENTS	5-1
5-1.	Introduction	5-1
5-3.	Safety Requirements	5-1
5-5.	Equipment Required	5-1
5-7.	Adjustments	5-1
5-10.	Adjustment Procedures	5-1
5-11.	Low-Voltage Power Supply Adjustment	5-3
5-12.	High-Voltage Power Supply Adjustment	5-4
5-13.	Z-Axis Offset, Balance, Intensity, and Gain Adjustments	5-6
5-14.	Z-Axis Offset, Balance, Intensity, and Gain Adjustments (Option 003)	5-7
5-15.	Z-Axis and Focus Amplifiers Pulse Response	5-9
5-16.	X-Amplifier Gain Adjustment	5-10
5-17.	Y-Amplifier Gain Adjustment	5-10
5-18.	X-Amplifier DC Balance	5-11
5-19.	Y-Amplifier DC Balance	5-11
5-20.	X-Amplifier Pulse Response and Bandwidth Adjustments	5-12
5-21.	Y-Amplifier Pulse Response and Bandwidth Adjustments	5-14
5-22.	Trace-Align and Ortho Adjustments	5-16
5-23.	Dynamic Focus and Astigmatism Adjustment	5-16
5-24.	Dynamic Focus and Astigmatism Adjustment (Alternate Procedure)	5-20
VI	REPLACEABLE PARTS	6-1
6-1.	Introduction	6-1
6-3.	Abbreviations	6-1
6-5.	Replaceable Parts List	6-1
6-7.	Ordering Information	6-1
6-10.	Direct Mail Order System	6-1

TABLE OF CONTENTS (Cont'd)

Section		Page
VII	MANUAL CHANGES	7-1
7-1.	Introduction	7-1
7-3.	Manual Changes	7-1
VIII	SERVICE	8-1
8-1.	Introduction	8-1
8-4.	Theory of Operation	8-1
8-6.	Troubleshooting	8-1
8-7.	Initial Troubleshooting Procedure	8-1
8-8.	DC Voltages and Waveforms	8-1
8-9.	Recommended Test Equipment	8-1
8-11.	Repair	8-1
8-12.	Assembly Removal	8-1
8-13.	Preventive Maintenance	8-1
8-15.	Circuit Boards	8-2
8-16.	Board Connections	8-2
8-17.	Servicing Etched Circuit Boards	8-2
8-18.	Service Sheet 1 Basic Principles of Operation	8-2
8-19.	General	8-2
8-20.	Deflection Amplifiers	8-2
8-21.	Z-Axis Amplifier	8-2
8-22.	Phosphor Protection	8-2
8-23.	Dynamic Focus and Astigmatism	8-2
8-24.	Low Voltage Power Supply	8-2
8-25.	High Voltage Power Supply	8-2
8-26.	Service Sheet 2 Principles of Operation	8-4
8-27.	Input Amplifier and Gain Control Circuit (Q1A, Q1B)	8-4
8-28.	Gain Control (U1, U2, Q5)	8-4
8-29.	Service Sheet 3 Principles of Operation	8-6
8-30.	X-Y Output Amplifier (Q4 through Q9, Q10 through Q15)	8-6
8-31.	Troubleshooting	8-6
8-32.	Service Sheet 4 Principles of Operation	8-8
8-33.	Impedance Converter, Gain Control, and Binary Gray Shade	8-8
8-34.	Z-Axis Output Amplifier	8-8
8-35.	Phosphor Protection	8-8
8-36.	Service Sheet 5 Principles of Operation	8-10
8-37	Dynamic Focus	8-10
8-38.	X-Y Input Amplifiers (A6Q1 through A6Q4)	8-10
8-39.	Current Amplifiers (Q5, Q6, Q7, Q8)	8-10
8-40.	Focus Output (A6Q22 through A6Q25)	8-10
8-41.	Z-Axis Focus Correction (A6, Q9, Q10, Q11)	8-10
8-42.	Service Sheet 6 Principles of Operation	8-12
8-43.	Dynamic Astigmatism	8-12
8-44.	X-Y Input Amplifiers (A6Q13 through A6Q16)	8-12
8-45.	Current Amplifiers (A6Q17 through A6Q20)	8-12
8-46.	Focus Output Amplifier (A6Q21)	8-12
8-47.	Service Sheet 7 Principles of Operation	8-14
8-48.	Oscillator Power Supply (A9Q4, A9VR1, A9CR16)	8-14
8-49	High Voltage Oscillator (A9Q5, Primary of A9T1)	8-14
8-50.	Cathode Supply (A9CR7, Secondary of A9T1)	8-14
8-51.	High Voltage Regulator (A9U1)	8-14
8-52.	High Voltage Shutdown (A9U2, A9Q3, A9U1)	8-14
8-53.	Purpose	8-14
8-54.	Causes of X-ray Emissions	8-14
8-55.	Preventing X-ray Emissions	8-14
8-56.	Principles of Operation	8-14
8-57.	Troubleshooting	8-14
8-58.	CRT Circuits	8-14
8-59.	Grid Level Translator (A9CR9, A9CR10, A9CR11, A9CR12)	8-14
8-60.	Focus Level Translator (A9CR8, A9CR13, A9CR14, A9CR15)	8-14
8-61.	Filament and PA Supply (P/O T1, A10)	8-14
8-62.	Service Sheet 8 Principles of Operation	8-16
8-63.	+250 V Supply (A11CR1 through A11CR4, A11Q1 through A11R3, Q2)	8-16
8-64.	−15 V Supply (A11CR9 through A11CR12, A6Q6, A6Q7, Q3)	8-16
8-65.	+15 V Supply (A11CR5 through A11CR6, A6Q4, A6Q5, Q2)	8-16

LIST OF ILLUSTRATIONS

Figure	Title	Page
1-1.	X-Y Display	1-0
1-2.	Dimensional Detail, 1311B	1-3
2-1.	Line Voltage Selection Switches	2-1
2-2	Rear Panel Power Module	2-2
3-1.	Controls and Connectors	3-2
3-2.	Input Terminal Impedance of Displays Conntected in Parallel	3-4
3-3.	Brightness Versus Cross Section of Typical CRT Spot	3-4
3-4.	Settling Time	3-5
3-5.	Linearity of Beam Position Showing Ideal Position and Possible Error	3-5
3-6.	Jumper Connection for TTL Blanking and Intensity	3-6
3-7.	Binary Z-Axis Input Connector, J6	3-6
4-1.	Amplifier Bandwidth Test Setup	4-2
4-2.	X-Deflection Factor Test Setup	4-3
4-3.	Y-Deflection Factor Test Setup	4-4
4-4.	Repeatability Test Setup	4-5
4-5.	Cross Talk Test Setup	4-6
4-6.	Z-Axis Blanking Polarity Test Setup	4-7
4-7.	Binary Gray Shade Test Setup	4-8
4-8	Binary Gray Shade Test Pattern	4-10
4-9	Settling Time Test Setup	4-11
4-10.	Settling Time Measurement with 1 V Input	4-12
5-1.	1311B Top View	5-2
5-2.	1311B Bottom View	5-2
5-3.	High-Voltage Shutdown Circuit Nomograph	5-5
5-4.	Low-Voltage and High-Voltage Power Supply Adjustment Locations	5-5
5-5.	Binary Gray Shade Test Setup	5-6
5-6.	Binary Gray Shade Test Pattern	5-6
5-7.	Z-Axis Option 003 Test Setup	5-8
5-8.	Z-Axis Amplifier Adjustment Locations	5-9
5-9.	Gain Set Adjustment Test Setup	5-10
5-10.	X-Amplifier Pulse Response and Bandwidth Adjustment Setup	5-12
5-11.	X-Amplifier Pulse Response Adjustment	5-13
5-12.	Y-Amplifier Pulse Response and Bandwidth Adjustment Setup	5-14
5-13.	Y-Amplifier Pulse Response Adjustment	5-15
5-14.	X-Y-Amplifier Adjustment Locations	5-15
5-15.	Dynamic Focus and Astigmatism Test Setup	5-16
5-16.	Focus and Astigmatism Test Pattern	5-19
5-17.	Focus and Astigmatism Output Waveforms	5-19
5-18.	Dynamic Focus and Astigmatism Test Setup	5-20
5-19.	Focus and Astigmatism Waveforms	5-20
5-20.	Beam Locations For Focus and Astigmatism Procedure	5-21
5-21.	Focus and Astigmatism Adjustment Locations	5-21
6-1.	Chassis Parts and Board Assembly Identification	6-3
8-1.	Schematic Diagram Symbols	8-0
8-2.	Service Sheet 1, Overall Block Diagram	8-3
8-3.	Simplified Schematic of X-Y Gain Control	8-4
8-4.	X-Y Input Amplifier (A1, A3) Component Locator	8-4
8-5.	Service Sheet 2, X-Y Axis Input Amplifier (A1, A3) Schematic	8-5
8-6.	Simplified Output Amplifier Schematic	8-6
8-7.	X-Y Output Amplifier (A2, A4) Component Locator	8-6
8-8.	Control Board (A13) Component Locator	8-7
8-9.	Service Sheet 3, X-Y Axis Output Amplifier (A2, A4) Schematic	8-7
8-10.	Simplified Schematic of Z-Axis Gain Control	8-8
8-11.	Simplified Block Diagram of the Phosphor Protection Circuit	8-8
8-12.	Z-Axis Amplifier (A5) Component Locator	8-8
8-13.	Service Sheet 4, Z-Axis Amplifier (A5) Schematic	8-9
8-14.	Focus and Astigmatism Amplifier (A6) Component Locator	8-10
8-15.	Service Sheet 5, Dynamic Focus (A6) Schematic	8-11
8-16.	Focus and Astigmatism Amplifier (A6) Component Locator	8-12
8-17.	Service Sheet 6, Dynamic Astigmatism (A6) Schematic	8-13
8-18.	Simplified Schematic of High Voltage Regulator Circuit	8-14
8-19.	Simplified Schematic of High Voltage Shutdown Circuit	8-14
8-20.	High Voltage Power Supply (A9) Component Locator	8-14

LIST OF ILLUSTRATIONS (Cont'd)

Figure	Title	Page
8-21.	Service Sheet 7, High Voltage Power Supply (A9) Schematic	8-15
8-22.	Low Voltage Power Supply (A11) Component Locator	8-16
8-23.	Service Sheet 8, Low Voltage Power Supply (A11) Schematic	8-17
8-24.	Left and Right Connector Board Wiring Diagram(A7, A8)	8-18

LIST OF TABLES

Table	Title	Page
1-1.	Specifications	1-1
1-2.	Supplemental Characteristics	1-2
1-3.	Standard Options	1-4
1-4.	Recommended Test Equipment	1-5
3-1.	Binary Gray Shades	3-3
4-1.	Binary Gray Shades	4-8
4-2.	Binary Gray Shade Test Pattern Program for HP 9825B	4-9
4-3.	Binary Gray Shade Test Pattern Program for HP 85A	4-9
5-1.	Low Voltage and High Voltage Power Supply Adjustments	5-5
5-2.	Z-Axis Amplifier Adjustments	5-9
5-3.	X-Y Amplifier Adjustments	5-15
5-4.	Focus and Astigmatism Test Program for HP 9825B	5-17
5-5.	Focus and Astigmatism Test Program for HP 85A	5-18
5-6.	Focus and Astigmatism Adjustments	5-25.
6-1.	Reference Designators and Abbreviations	6-2
6-2.	Replaceable Parts	6-6
6-3.	List of Manufacturers Codes	6-30
7-1.	Manual Changes	7-1
8-1.	Service Sheet Quick Reference	8-1
8-2.	Troubleshooting Guide for X-Y Output Amplifier	8-6
8-3.	Troubleshooting Hints for High Voltage Shutdown Circuit	8-14

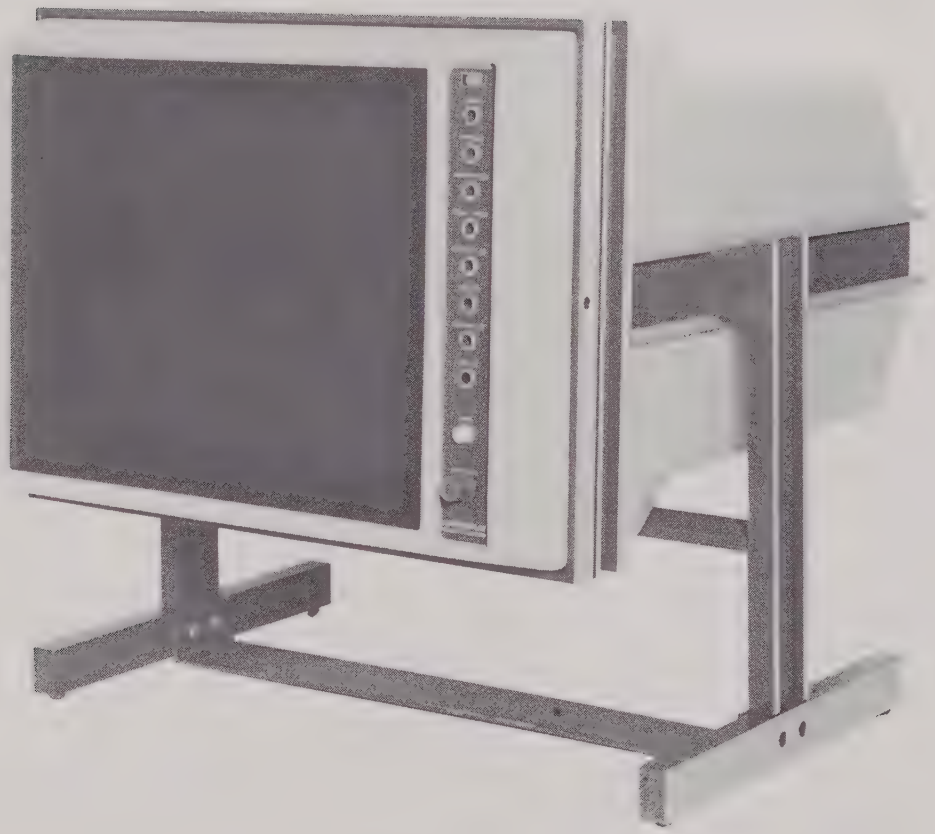

Figure 1-1. X-Y Display

SECTION I

GENERAL INFORMATION

1-1. INTRODUCTION.

1-2. This operating and service manual contains information required to install, operate, test, adjust, and service Hewlett-Packard Model 1311B. The manual part number is listed on the title page. Also listed on the title page of this manual is a Microfiche part number. This number can be used to order 4 x 6-inch microfilm transparencies of the manual. Each microfiche contains up to 96 photo-duplicates of the manual pages. The microfiche package also includes the latest Manual Changes supplement as well as a pertinent Service Note.

1-3. SPECIFICATIONS.

1-4. Instrument specifications are listed in table 1-1. These specifications are the performance standards or limits against which the instrument is tested. Table 1-2 lists supplemental characteristics. Supplemental characteristics are not specifications but are typical characteristics included as additional information for the user.

1-5. SAFETY CONSIDERATIONS.

1-6. This product is a Safety Class 1 instrument (provided with a protective earth terminal). The 1311B X-Y Display is equipped with a detachable, three-conductor power cord which, when plugged into an appropriate outlet, grounds the instrument through a separate pin. When operating the 1311B from a two-conductor adapter, preserve the safety feature by grounding the adapter lead.

1-7. Prior to operating or performing maintenance on the instrument become familiar with all safety markings and instructions. Read the Safety Considerations page at the front of this manual for general safety information.

1-8. INSTRUMENTS COVERED BY MANUAL.

1-9. Attached to the instrument is a serial number plate. The serial number is in the form: 0000A00000. It is in two parts; the first four digits and the letter are serial prefix and the last five digits are the suffix. The prefix is the same for all identical instruments; it changes only when a change is made to the instrument.The suffix however, is assigned sequentially and is different for each instrument. The contents of this manual apply to instruments with the serial number prefix(es) listed under SERIAL NUMBERS on the title page.

1-10. An instrument manufactured after the printing of this manual may have a serial number prefix that is not listed on the title page. This unlisted serial number prefix indicates the instrument is different from those described in this manual. The manual for this newer instrument is accompanied by a yellow Manual Change supplement. This supplement contains "change information" that explains how to adapt the manual to the newer instrument.

1-11. In addition to change information, the supplement may contain information for correcting errors in the manual. To keep this manual as current and accurate as possible, Hewlett-Packard recommends that you periodically request the latest Manual Change supplement. The supplement for this manual is identified with the manual print date and part number, both of which appear on the manual title page. Complementary copies of the supplement are available from Hewlett-Packard.

1-12. For Information concerning a serial number prefix that is not listed on the title page or in the Manual Change supplement, contact your nearest Hewlett-Packard office.

Table 1-1. Specifications

VERTICAL AND HORIZONTAL AMPLIFIERS

RISE TIME: <75 ns, 10% to 90% points for full screen deflection.

BANDWIDTH: dc to 5 MHz (3 dB down at 5 MHz) with 8.9 cm (3.5 in.) deflection.

SETTLING TIME: signal settles to within 1 spot diameter of final value in <500 ns for any on screen movements.

REPEATABILITY: <0.15% of full screen error in readdressing any point on screen from any point on screen.

CROSSTALK: <0.38 mm (<0.015 in.) with one input terminated in 50Ω and the other input driven by 1 V, 500 kHz signal.

DEFLECTION FACTOR: front panel adjustable through the range indicated below:

Vertical	Horizontal
from approx. 46.3 mV/cm (118 mV/in.) to 81 mV/cm (207 mV/in.)	from approx. 35.8 mV/cm (90 mV/in.) to 60.9 mV/cm (153 mV/in.)

Table 1-1. Specifications (Cont'd)

SPOT JITTER AND MOTION: 0.13 mm (0.005 in.) with X INPUT and Y INPUT disconnected.
POSITION: zero input can be set to any on-screen postion.
POLARITY: positive vertical input moves the beam up; positive horizontal input moves the beam right.
X-Y INPUT: rear panel BNC female connectors with floating shield.
X-Y INPUT IMPEDANCE: 50Ω, switchable to 10 kΩ shunted by 40 pF.
MAXIMUM INPUT: ±50 V (dc + peak ac) with 10 kΩ internal termination. ±5 V (dc + peak ac) with 50Ω internal termination.
LINEARITY: 1% of full scale display (along major axes).
DRIFT: 5.08 mm/hr (0.2 in./hr) first hour and 6.35 mm/hr (0.25 in./hr) in next 24 hours with covers installed.

Z-AXIS AMPLIFIER

RISE TIME: <25 ns.
SENSITIVITY: −1 V signal blanks trace; +1 V signal (INTENSITY at maximum) provides maximum intensity. Polarity may be reversed by changing internal lead connections.
Z-INPUT: rear panel BNC female connector with floating shield.
Z-INPUT IMPEDANCE: 50Ω switchable to 10 kΩ shunt by 60 pF.
TTL BLANKING: high state blanks CRT. (polarity reversible).
BINARY GRAY SHADE: 3 bit TTL level input providing 7 gray shades and blanking.
MAXIMUM INPUT: ±50 V (dc + peak ac) with 10 kΩ internal termination. ±5 V (dc + peak ac) with 50Ω internal termination.

Table 1-2. Supplemental Characteristics

CATHODE-RAY TUBE

VIEWING AREA: 36.5 cm (14 in.) diagonal, useable viewing area at least 20.3 cm (8 in.) vertical by 25.4 cm (10 in.) horizontal.
TYPE: post-accelerator, 28.5 kV accelerating potential, P31 aluminized phosphor is standard. Electrostatic focus and deflection.
SPOT SIZE: 0.43 mm (0.017 in.) at center of screen.
RESOLUTION: ≥24 lines/cm (61 lines/in.) center screen and ≥20 lines/cm (50 lines/in.) in the corners over a 20.3 x 25.4 cm (8x10 in.) viewing area.
BRIGHTNESS: at least 84 cd/m^2 (24.5 fl) measured at 2.54 mm/μs (0.1 in./μs), 60 Hz rate, with spot size of 0.5 mm (0.020 in.), P31 Phosphor.
X-RAY EMISSION: CRT emission <0.5 mR/hr; not measurable above background noise using Victoreen Model 440RF/C.
IMPLOSION PROTECTION: rim tension banding prevents implosive devacuation. (UL/IEC348).
PHOSPHOR PROTECTION: circuit detects absence of deflection signals and limits beam current.
HIGH VOLTAGE SHUTDOWN: senses over voltage condition and turns off high voltage.

GENERAL:

POWER: selectable to 100 Vac 120 Vac, 220 Vac, and 240 Vac +5% −10%, 48 Hz to 440 Hz, 185 VA maximum.

ENVIRONMENT:

ALTITUDE: 4600m (15000 ft) operating at 25° C 7600m (25000 ft) non-operating.
TEMPERATURE: 0° C to +55° C operating; −40° C to +70° C non-operating.
HUMIDITY: to 95% at 40° C.
VIBRATION: 10-55 Hz at .38 mm (0.015 in.) peak to peak excursion.
SHOCK: level 30g; duration 11 ms; shape 1/2 sine wave.
X, Y, and Z INPUT CONNECTORS: BNC type mounted on rear panel.
WEIGHT: net, 24.7 kg (54.5 lb); shipping 30 kg (66 lb).
DIMENSIONS: refer to figure 1-2 for complete details.

1-13. DESCRIPTION.

1-14. The HP Model 1311B is a large screen, high speed, computer graphic display designed for OEM system applications. The CRT has an aluminized P31 phosphor and a 100% usable viewing area.

1-15. SPECIAL FEATURES.

1-16. DYNAMIC FOCUS-ASTIGMATISM. Voltages proportional to the position of the CRT beam are applied to the focus and astigmatism elements fo the CRT. This causes spot size and shape to remain constant over the CRT viewing area. Focus is also corrected for changes in intensity level.

1-17 PHOSPHOR PROTECTION. A protection circuit senses slow or static deflection signals and limits beam intensity to prevent burning of the CRT phosphor and mesh.

1-18. INPUT MODIFICATIONS. The input circuits to the X, Y, and Z amplifiers are designed to permit easy modification for single ended or differential operation. Additionally, the input termination resistance and the input attenuation ratio for the X and Y amplifiers can be changed.

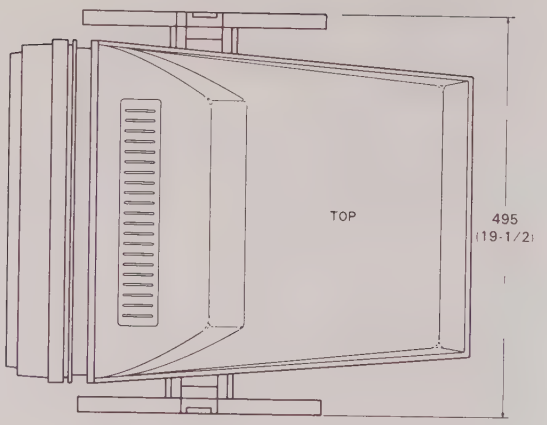

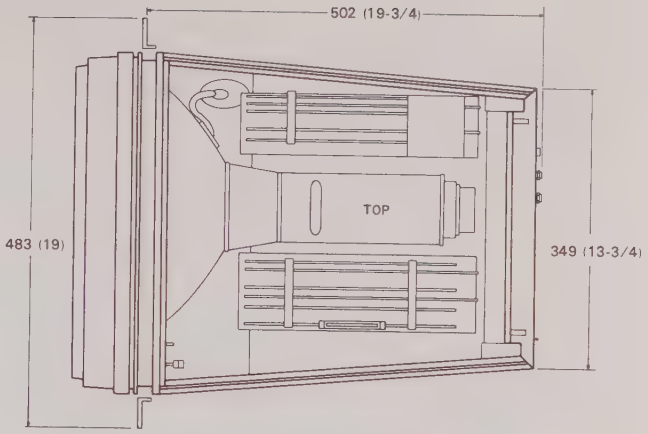

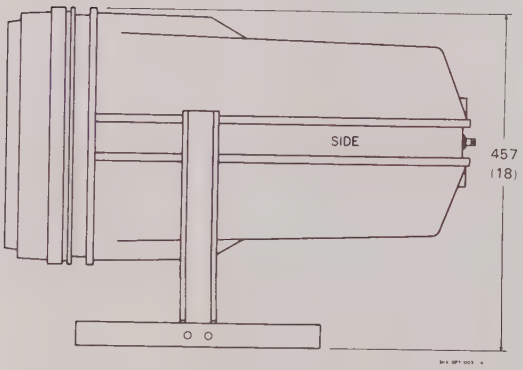

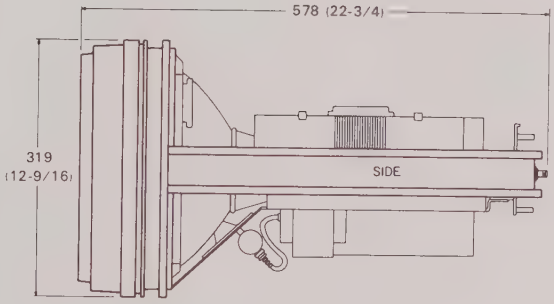

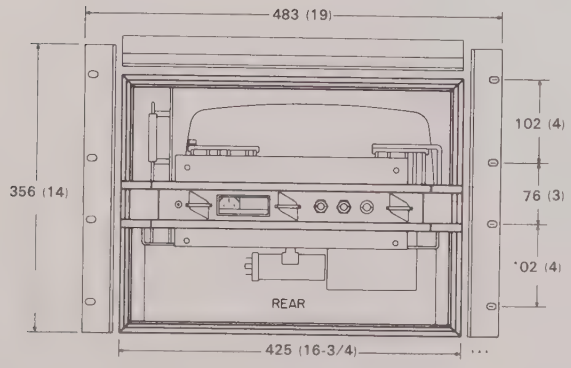

NOTES

1. DIMENSIONS ARE FOR GENERAL INFORMATION ONLY. IF DIMENSIONS ARE REQUIRED FOR BUILDING SPECIAL ENCLOSURES, CONTACT YOUR HP FIELD ENGINEER.
2. DIMENSIONS ARE IN MILLIMETRES AND (INCHES).

Figure 1-2. Dimensional Detail, 1311B

1-19. OPTIONS.

1-20. Standard options are modifications installed on HP instruments and are available on request. Table 1-3 lists available options for the 1311B.

Table 1-3. Standard Options

Option	Description
001	Delete tilt stand and add a rack mount kit.
002	Delete tall tilt stand and add a short tilt stand.
003	Delete contrast control and add brightness control
004	Delete front panel bezel, contrast filter and tilt stand.
330	UL Listed for medical and dental equipment (UL 544).
604	P4 phosphor, aluminized, open graticule CRT in lieu of P31.
639	P39 phosphor, aluminized, open graticule CRT in lieu of P31.
910	Extra set of manuals.

1-21. ACCESSORIES SUPPLIED.

1-22. The following accessories are supplied with the 1311B.

One Operating and Service Manual
One AC line cord (for HP Part No. refer to Section II)
One Tilt Stand

1-23. ACCESSORIES AVAILABLE.

1-24. The following equipment is available for the 1311B:

1 metre four-coax cable HP Model 52125A
10 metre four-coax cable HP Model 52124A
Rack mount slide kit, HP Stock No. 01311-68704
Rack mount pivoting slide kit, HP Stock No. 01311-68705
Rack mount kit, HP Stock 01311-68701

1-25. RECOMMENDED TEST EQUIPMENT.

1-26. Equipment required to test the 1311B performance is listed in table 1-4. Other equipment may be substituted if it meets or exceeds the critical specifications listed in the table.

Table 1-4. Recommended Test Equipment

Instrument Type	Recommended Model	Required Characteristics	Required For
Monitor Oscilloscope	HP Model 1740A with two 10041A Probes	Bandwidth: 100 MHz Dual Channel	Adjustments
50:1 Divider Probe	HP Model 10002A	Shunt Capacitance; 2.5 pF Resistance 9 MΩ Max. dc Volts 1000 V	Adjustments
Function Generator	HP Model 3312A	Output Waveforms: sine, square, ramp Frequency Range: 1 Hz-10 MHz Square Wave Rise Time: 10% to 90% <18 ns Sine Wave Distortion: <.5% Output Impedance: 50Ω Output Level: 20 V p-p into open circuit, 10 V p-p into 50Ω DC offset	Adjustments Performance Checks
Pulse Generator (Qty 2)	HP Model 8013B	Rep Rate; 1 Hz to 10 MHz Output Impedance: 50Ω Output Level: app. 10 V across 50Ω	Adjustments Performance Checks
Digital Voltmeter	HP Model 3465B	Voltage Range: −15 V to 250V Accuracy: 0.1% Input Resistance: 10 MΩ	Adjustments
1000:1 Divider Probe	HP Model 34111A	Voltage Rating: 10 kV	Adjustments
HP-IB Controller	HP Model 9825B or HP Model 85A	23K byte R/W memory Equipped with: 98210A String Advance Program ROM 98214 Extended I/O ROM 98034A HP-IB Interface 16K byte R/W memory Equipped with: 82936A ROM Drawer I/O ROM (00085-15003) 82937A HP-IB Interface	Adjustments
Graphics Generator	HP Model 1351A	52104A HP-IB Interface	Adjustments
Binary Z-Input Cable	HP Part No. 8120-2739	Four Conductor Cable terminated at both ends by 25-pin male "D" type connectors Pins 4, 5, 15, and 17 interconnected.	Adjustments

SECTION II

INSTALLATION

2-1. INTRODUCTION.

2-2. This section provides installation instructions for the Model 1311B X-Y Display. This section also includes information about initial inspection and damage claims, preparation for use, and storage and shipment.

WARNING

To avoid hazardous electrical shock, do not perform electrical tests when there are signs of shipping camage to any poriton of the front or rear panel, or outer covers. Also, read the Safety Summary at the front of this manual before installing or operating the instrument.

2-3. INITIAL INSPECTION.

2-4. Inspect the shipping container for damage. If the shipping container or cushioning material is damaged, it should be kept until the contents of the shipment have been checked for completeness and the instrument has been checked mechanically and electrically. The contents of the shipment should be as listed in the "Accessories Supplied" paragraph in section I. Procedures for checking electrical performance are given in Section IV. If the contents are incomplete, if there is mechanical damage or defect, or if the instrument does not pass the Performance Tests, notify the nearest Hewlett-Packard office. If the shipping container is damaged, or the cushioning material shows signs of stress, notify the carrier as well as the Hewlett-Packard office. Keep the shipping material for carrier's inspection. The HP office will arrange for repair or replacement at HP option without waiting for claim settlement.

2-5. PREPARATION FOR USE.

WARNING

Read the Safety Summary in the front of this manual before installing or operating this instrument.

2-6. POWER REQUIREMENTS. The 1311B requires a power source of 100, 120, 220, or 240 Vac +5%, -10%, single phase, 48 Hz to 440 Hz that can deliver approximately 185 VA (maximum).

2-7. AC LINE VOLTAGE.

CAUTION

Instrument damage may result if both line voltage selection devices are not set for the proper input voltage.

2-8. LINE VOLTAGE SELECTION. The 1311B is normally shipped from the factory with the line selection set for the line voltage used in the country of destination. There are two devices in the line voltage selection process (Figure 2-1). A removable jumper board in the power module provides selection of high or low voltage range operation. Switch S2, mounted above the line input module, provides selection of the specific line voltage. For example if 120 Vac operation is desired, the jumper board position is selected for low range operation (115/120), and S2 is set to the 120/240 position. To operate the instrument from a power source other than 120 Vac, disconnect power cord and proceed as shown in Figure 2-2.

CAUTION

Before placing the instrument in operation, ensure that the operating voltage visible in the power module window (Figure 2-1) agrees with the line voltage being used. The power supplies may be damaged if the line voltage selection is incorrect.

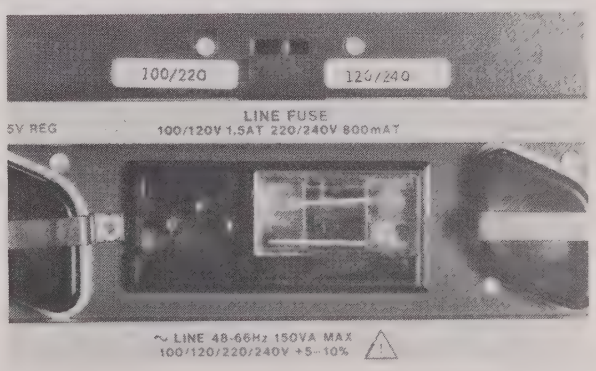

Figure 2-1. Line Voltage Selection Switches

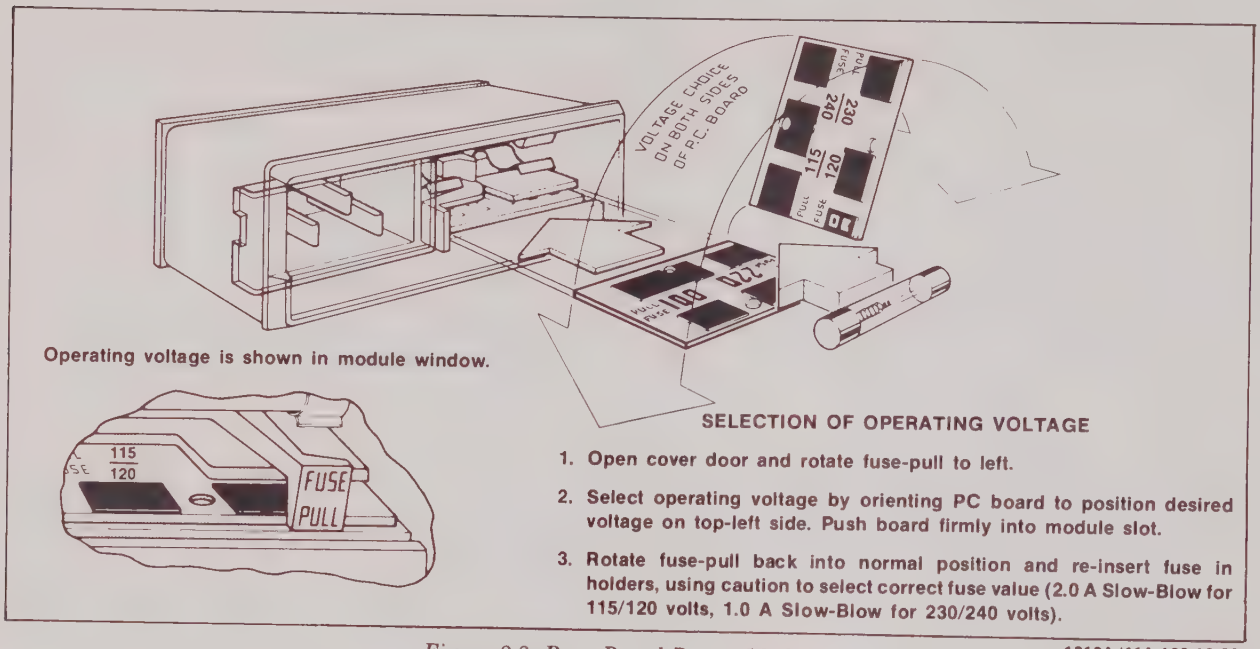

Figure 2-2. Rear Panel Power Module

1310A/11A-103-10-83

2-9. AC POWER CABLE. This instrument is equipped with a three-wire power cable. When connected to an appropriate ac power receptacle this cable grounds the instrument cabinet. The type of power cable plug shipped with each instrument depends on the country of destination. Power cables (and associated option numbers) are listed at the end of the parts list in Section VI.

2-10. OPERATING ENVIRONMENT.

2-11. TEMPERATURE. The instrument may be operated in temperatures from 0° C to +55° C (+32 F to +130 F).

2-12. HUMIDITY. The instrument may be operated in environments with humidity up to 95%. However, the instrument should also be protected from temperature extremes which cause condensation within the instrument.

2-13. Altitude. The instrument may be operated at altitudes up to 4600 m (15,000 ft.).

2-14. STORAGE AND SHIPMENT.

2-15. Environment. The instrument may be stored or shipped in environments within the following limits:

Temperature	−40° C to +70° C
Humidity	Up to 95% at 40° C
Altitude	Up to 7600 m (26,000 ft.)

The instrument should also be protected from temperature extremes which cause condensation within the instrument.

2-16. PACKAGING.

2-17. Original Packaging. Containers and materials identical to those used in factory packaging are available through Hewlett-Packard offices. If the instrument is being returned to Hewlett-Packard for servicing, attach a tag indicating the type of service required, return address, model number, and full serial number. Also mark the container FRAGILE to ensure careful handling. In any correspondence, refer to the instrument by model number and full serial number.

2-18. Other Packaging. The following general instructions should be used for re-packing with commercially available materials:

a. Wrap instrument in heavy paper or plastic. (If shipping to Hewlett-Packard office or service center, attach tag indicating type of service required, return address, model number, and full serial number.)

b. Use strong shipping container. A double-wall carton made of 350-pound test material is adequate.

c. Use a layer of shock-absorbing material 70 to 100 mm (3 to 4 inch) thick around all sides of the instrument to provide firm cushioning and prevent movement inside container. Protect control panel with cardboard.

d. Seal shipping container securely.

e. Mark shipping container FRAGILE to ensure careful handling.

f. In any correspondence, refer to instrument by model number and full serial number.

SECTION III

OPERATION

3-1. INTRODUCTION.

3-2. This section contains information and instructions for operating the HP Model 1311B. It applies verbatim, only to the standard instrument.

3-3. PANEL FEATURES.

3-4. The instrument is intended for use as a general purpose graphic display. It is an X, Y, Z display with analog voltage inputs for X, Y, and Z-axis controls, as well as binary grey shade control. A TTL Blanking input is also provided. All signals must be externally supplied through rear-panel connection. Intensity, focus, X-position, Y-position, astigmatism, X-gain, Y-gain and trace align controls are adjustments accessible from the front panel.

3-5. CONTROLS AND CONNECTORS.

3-6. Front and rear panel controls and connectors are described in figure 3-1. Description numbers match the numbers on the illustration. The following paragraphs explain the switches located on printed circuit boards.

WARNING

Dangerous voltages capable of causing serious injury or death are present in this instrument. The following internal switches should be set by qualified personnel only.

3-7. INPUT IMPEDANCE SWITCHES. The input impedance selector switches permit selection of either 50Ω or 10 KΩ for the X, Y, and Z axis amplifiers. A1S1 controls the X amplifier, A3S1 controls the Y axis amplifier, and A5S1 controls the Z axis amplifier.

3-8. PHOSPHOR PROTECTION. The Phosphor Protection switch (A8S1) is located on the right connector board (A8). This switch either enables or disables the phosphor protection circuit.

3-9. PREOPERATIONAL PROCEDURE.

WARNING

Before the instrument is switched on be sure that the power cord protective earth ground is connected (through the ac power cable to ac outlet). any interruption of the protective earth grounding may cause a potential shock hazard that could result in personal injury.

CAUTION

Before the instrument is switched on, it must be set to the voltage of the power source. The instrument is set by the factory to the voltage used in the country of shipping destination. If a different power source is to be used, refer to SECTION II for proper switch settings and fuse type.

WARNING

DO NOT REMOVE COVERS. Internal parts present an electrical shock hazard. Refer servicing to qualified service personnel.

3-10. The Preoperational checks apply directly only to the standard instrument. Prepare the 1311B for operation as follows:

a. Set INTENSITY (10) fully counterclockwise.

b. Set horizontal and vertical POSITION controls (5) (7) to midrange.

c. Turn line switch (I) on. Power indicator lamp should light.

CAUTION

A high-intensity display over an extended period will burn the CRT phosphor.

d. Adjust INTENSITY (10) for a dimly visible spot.

e. Adjust Y POSITION (7) through its full range. Display spot will move vertically on CRT, disappearing from the viewing area at either extreme of the control. Center the Y POSITION control.

f. Adjust X POSITION (5) through its full range. Display spot will move horizontally on CRT, disappearing from the viewing area at either extreme of the control. Center the X POSITION control.

g. Adjust FOCUS (1) and ASTIGMATISM (3) controls for smallest, sharpest spot on CRT.

h. Apply a 1 kHz, 1 V p-p sinewave to the X-INPUT (A) connector on rear panel.

i. Adjust TRACE ALIGN (4) to align trace horizontally.

j. Set X-GAIN (6) for a trace length of exactly 25.4 cm (10 in.).

k. Apply a 1 kHz, 1 V p-p sinewave to the Y-INPUT (B) connector on rear panel and adjust ORTHOG control to cause the trace to lie perpendicular to the X-axis.

l. Set Y-GAIN (8) for a trace length of exactly 25.4 cm (10 in.).

FRONT PANEL

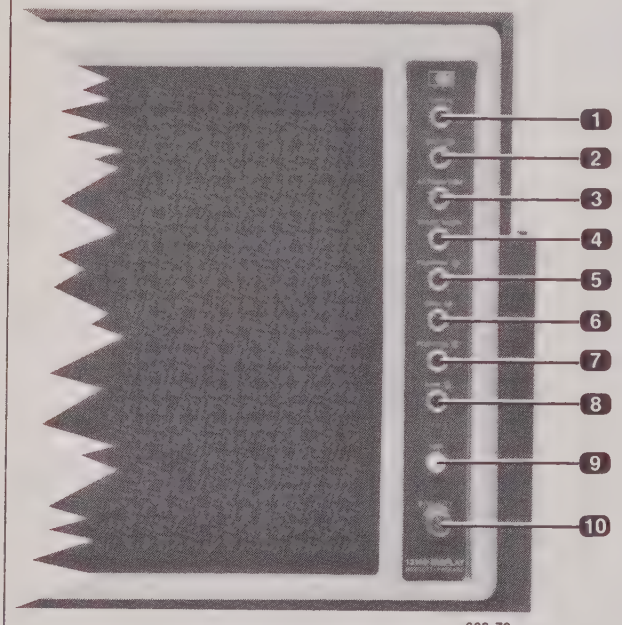

1. **FOCUS.** Focuses the trace; used in conjunction with ASTIG control to provide the sharpest CRT display.
2. **ORTHOGONAL.** Used to adjust perpendicularity of X and Y traces. Used in conjunction with TRACE ALIGN control.
3. **ASTIGMATISM.** Control which adjusts the roundness of the spot.
4. **TRACE ALIGN.** Rotates X and Y traces about screen center. Aligns Y trace to vertical graticule line and X trace to horizontal graticule line. Used in conjunction with ORTHOG control which aligns vertical trace perpendicular to horizontal trace.
5. **POSN X.** Adjusts the trace position horizontally.
6. **GAIN X.** Adjustment for varying the gain of the X-amplifier. Gives 1.75:1 range of adjustment.
7. **POSN Y.** Adjusts the trace position vertically.
8. **GAIN Y.** Adjustment for varying the gain of the Y-amplifier. Gives 1.75:1 range of adjustment.
9. **POWER ON.** Light indicating power is applied to the instrument.
10. **INTENSITY.** Adjusts the brightness of the display.

NOTE

The INTENSITY control will have very little effect on the dot brightness in the absence of a Z-axis input signal.

REAR PANEL

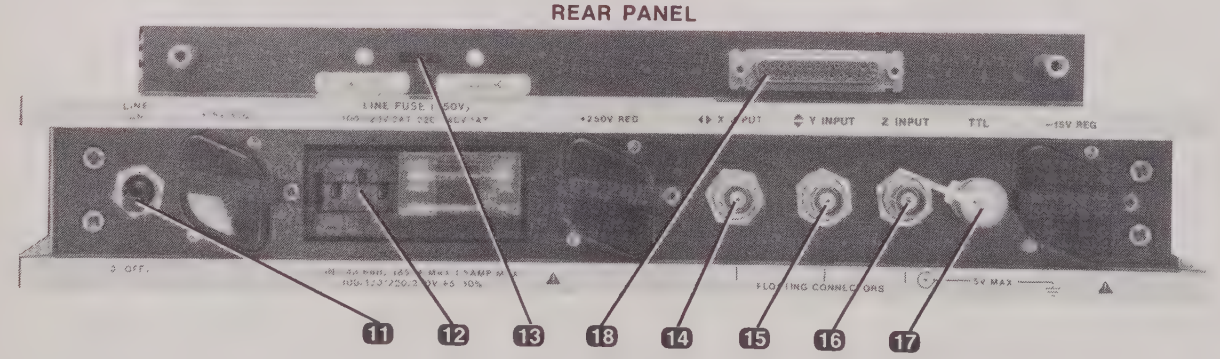

11. **POWER ON switch.** Applies ac power to the instrument.
12. **INPUT ac power cord connector.**
13. **LINE VOLTAGE SELECT.** Selects line voltage for 100/220 or 120/240 V operation.
14. **X INPUT.** X-axis input connector.
15. **Y INPUT.** Y-axis input connector.
16. **Z INPUT.** Z-axis input connector.
17. **TTL INPUT.** TTL input connector for Z-axis control.
18. **Z-AXIS GRAY SHADE INPUT.**

Figure 3-1. Controls and Connectors

3-11. INTERFACING CONSIDERATIONS.

3-12. GENERAL. Standard sensitivities of the X and Y deflection amplifier are 1 V p-p for full screen deflection. Front panel gain controls for each axis reduce sensitivity to 1.75 V p-p for full screen deflection. X-Y deflection amplifiers may be configured for either single ended or differential operation. Input polarity may be reversed by changing components at the input of the X and Y amplifiers and by interchanging the input cable connections on the rear edge of the input amplifier board (A1 for X amplifier and A3 for Y amplifier). The input impedance selector switches permit selection of either 50Ω or 10 KΩ for the X, Y, and Z axis amplifiers. A1S1 controls the X amplifier, A3S1 controls the Y amplifier, and A5S1 controls the Z axis amplifier.

3-13. TTL BLANKING. As configured by the factory, a TTL logic 1 (≥2.5 volts) will blank the CRT beam. When returned to a TTL logic 0 (≤.8 volts) the beam is returned to analog control. The sense of this TTL blanking may be reversed by moving the TTL jumper (see Service Sheet 4) from the Standard (TTLS) position to the Negative (TTLN) position. No calibration need be performed for this configuration.

3-14. BINARY GRAY SHADE. Varying beam intensities may be digitally implemented by presenting a 3 bit TTL logic level word to the BINARY Z-INPUT. This allows the programmer the option of highlighting or subduing aspects of the display. See table 3-1 for binary to intensity relationships. "WX" commands are shown for display systems using the HP Model 1351A Graphics Generator.

Table 3-1. Binary Gray Shades

Binary Word	HP 1351A Command NO BLINK/BLINK*	Beam Intensity
000	WX0/WX8	Brightest
001	WX1/WX9	2nd "
010	WX2/WX10	3rd "
011	WX3/WX11	4th "
100	EX4/WX12	5th "
101	WX5/WX13	6th "
110	WX6/WX14	Dimmest
111	WX7/WX15	Blanked

*HP 1351A I/O Board Blink Switch "on".

3-15. OPTION 003 (INTENSITY AS BRIGHTNESS). As configured by the factory, INTENSITY controls the screen contrast. It is in this configuration for which the Binary Gray Shades are intended. If this feature is not used, Option 003 configures INTENSITY to control screen brightness. To obtain the Option 003 configuration, refer to Service Sheet 4 and move the Standard Intensity jumper (marked INT S) to the Option 003 (marked INT O) position. The adjustment procedure for this option must now be performed. Refer to Section 5-14.

3-16. ATTENUATORS. The 1311B provides full scale X-axis and Y-axis deflection when a 1 V p-p signal is applied to either input. A front-panel GAIN control for each axis reduces sensitivity to 1.75 V p-p for full screen deflection. Attenuators may be added to provide full-scale deflection for input voltages up to ±50 Vdc + peak ac with 10 KΩ internal termination on ±5 V + peak ac with 50Ω internal termination. Space and pads are provided on the X-Y circuit boards for adding attenuators. (See Service Sheet 2 in Section VIII.) Regardless of input attenuation, range of the GAIN control is constant at a ratio of 1.75:1.

3-17. POLARITY. In a standard display, a positive going voltage deflects the beam to the right when applied to the X input center conductor, or up when applied to the Y input center conductor. To change polarity, switch the positions of A1(A3) R2 and A1(A3) R3 and interchange the input cable connections on the rear edge of the input amplifier board. When mounting the display physically inverted, interchange the CRT deflection plate connections to retain the sense of the position controls and maintain correct input polarity.

3-18. BANDWIDTH REDUCTION. In some cases, the full 5 MHz bandwidth of the deflection amplifier is not needed; in fact, in some applications it may be desirable to reduce the bandwidth to eliminate system noise problems. If the desired bandwidth is approximately 1 MHz or greater, the deflection amplifier can be modified internally by increasing the value of A1C8 and A1C9 for X-amplifier and A3C8 and A3C9 for the Y-amplifier. For a desired 3 dB bandwidth f, the value of C8 and C9 can be calculated with the equation:

$$C = \frac{1}{2 \pi fo R}$$

Where:

fo = –3 dB bandwidth desired
R = shunt resistance (in this case 1000Ω)
C = required capacitance

NOTE

This formula gives accurate results for bandwidth frequencies below 1 MHz. Above this frequency, other factors also influence the bandwidth; therefore, experimentation is necessary to achieve proper value. Use capacitors that do not exceed 1600 pf ±5% (or better).

3-19. RINGING. Ringing is one possible undesirable side effect of improperly terminated inputs. For instance, an abrupt transition from blanked to unblanked in an improperly terminated Z-axis input line may cause ringing which will appear as intensity fluctuation in the display. For minimum induced crosstalk and ringing, displays connected in parallel should be connected as shown in figure 3-2.

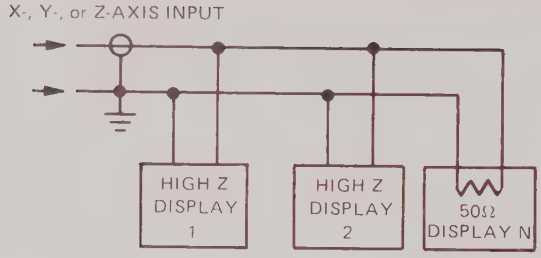

Figure 3-2. Input Termination Impedance of Displays Connected in Parallel

3-20. PERFORMANCE FACTORS. Major performance factors, and their meaning, how they are determined, and how they affect system performance are explained in the following paragraphs.

3-21. SPOT SIZE AND RESOLUTION. If you scan a CRT spot with a microscope photometer and plot brightness versus distance (along spot width), the result approximates a Gaussian curve (see figure 3-3). Spot size is the width of the Gaussian curve at its 50% point (see Section I, table 1-1).

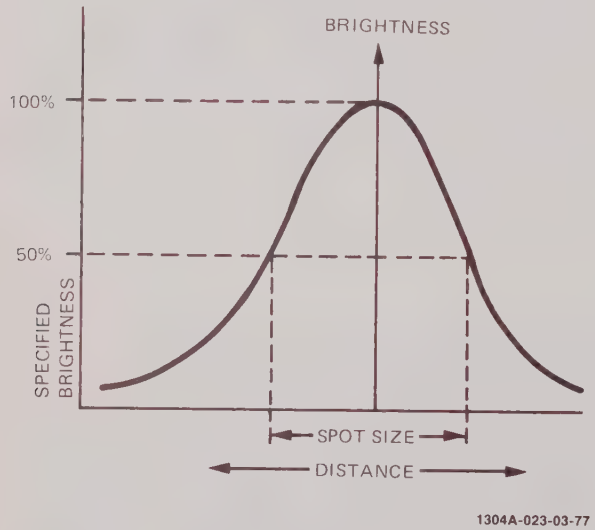

Figure 3-3. Brightness Versus Cross Section of Typical CRT Spot

3-22. In practice, the 50% point can be determined by using the shrinking raster measurement method. The shrinking raster measurement is obtained by displaying a raster of lines (or dots) on the CRT and then adjusting the vertical and horizontal gain until the individual lines (or dots) are no longer individually identifiable. The size of the raster is then divided by the number of lines in the raster to determine the spot size. The point where raster lines (or dots) merge is the theoretical 50% point on the Gaussian curve.

3-23. The shrinking raster method should be used if a scanning microscope photometer is not available, because observing an individual line (or dot) with an optical comparator can be very misleading. On a single dot, the eye can see to about the 3% point on the Gaussian curve. Here the dot appears to be approximately twice the width it is across the 50% points.

3-24. BRIGHTNESS. Brightness is specified only with respect to a specific combination of writing speed, refresh rate, and phosphor (P31 for 1311B). Maximum brightness for other given conditions can be calculated using the following formula:

Where:

$$Bmax = (5.6\ fl)\left(\frac{0.1}{W}\right)\left(\frac{R}{60}\right) EP$$

5.6 fl = specified brightness

W = writing speed in inches per microseconds

EP = phosphor efficiency (relative to P31): P4 and P39 50%.

R = refresh rate in Hz.

3-25. For measuring brightness, two points should be remembered: (1) specific brightness is not measured in radiometric units but in photometric units which are normalized to the spectral response of the human eye, and (2) brightness is directly proportional to the refresh rate and inversely proportional to writing speed.

3-26. The brightness of a spot in a display that is made up of dots may be determined by using the following formula when the dot refresh rate and the pulse width used to generate the dots are known:

$$B = (B\ spec)\left(\frac{(Ws)}{Rs\ Ds\ Cd}\right)$$

Where:

B = minimum spot brightness at full intensity and/or maximum Z-axis input level.

B spec = specified line brightness.

Ws = writing speed at which line brightness is specified.

Rs = refresh rate at which line brightness is specified.

Ds = specified spot diameter.

Cd = duty cycle calculated from: Z-axis pulse width × refresh rate.

3-27. SETTLING TIME. Settling time is defined as the elapsed time between an input step command and the time for the beam to settle within a specified tolerance to its final position (see figure 3-4). Settling time must be taken into account when moving the beam from one location to another. Otherwise, there may be tails on dots or line distortions at the starting point of vectors.

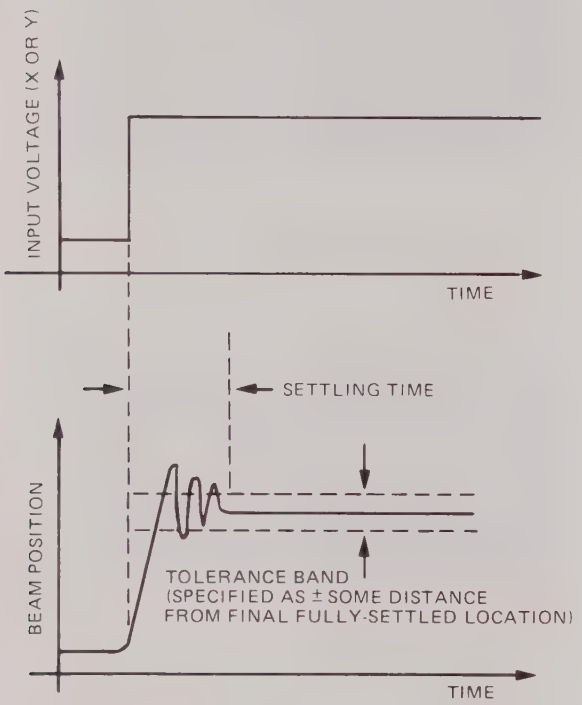

Figure 3-4. Setting Time

3-28. LINEARITY. Linearity (see figure 3-5) refers to the linearity to the relationship between the X or Y input voltage and the beam position.

NOTE

Linearity is specified only along the CRT's major axes.

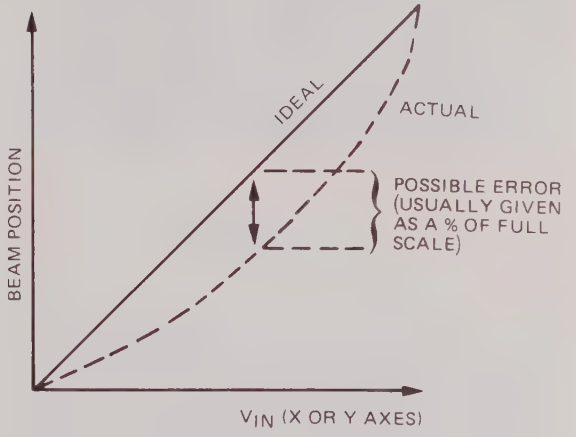

Figure 3-5. Linearity of Beam Position Showing Ideal Position and Possible Error

3-29. OPERATOR MAINTENANCE.

3-30. Operator maintenance should be limited to exterior cleaning of the instrument. Smooth metal surfaces can be cleaned with a commercial glass cleaner. Stubborn residues can be removed with a mild liquid household detergent. The CRT filter should be cleaned only with isopropyl alcohol.

STANDARD FACTORY SETTING

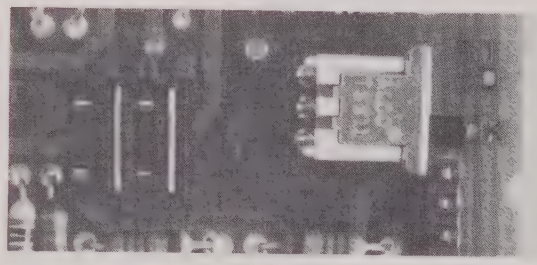

INTENSITY CONNECTED IN THE CONTRAST MODE
STANDARD TTL BLANKING CONFIGURATION
(+ BLANKS SCREEN)

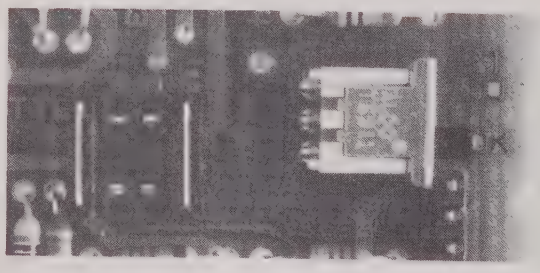

INTENSITY CONNECTED IN CONTRAST MODE
NEGATIVE TTL BLANKING CONFIGURATION
(– BLANKS THE SCREEN)

OPTION 003

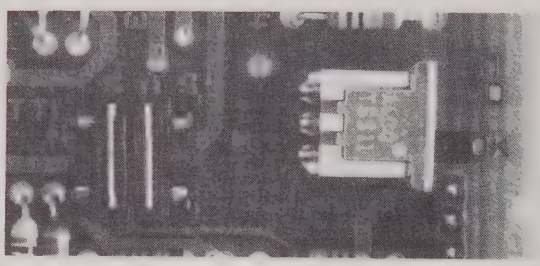

INTENSITY CONNECTED AS BRIGHTNESS CONTROL
POSITIVE TTL BLANKING CONFIGURATION
(+ BLANKS SCREEN)

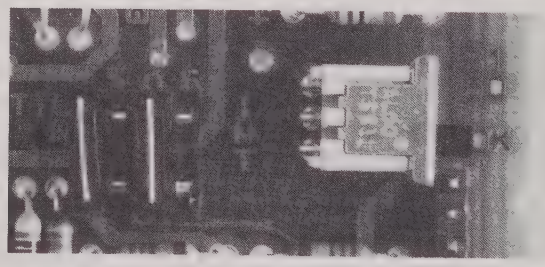

INTENSITY CONNECTED AS BRIGHTNESS CONTROL
– TTL BLANKING CONFIGURATION
(– BLANKS THE SCREEN)

Figure 3-6. Jumper Connections for TTL Blanking and Intensity (A5E5-A5E8)

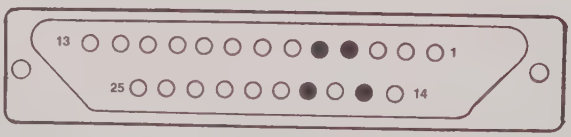

PINS 4, 5, 17, 15 ARE USED FOR BINALRY Z-AXIS INPUT

Figure 3-7. Binary Z-Axis Input Connector, J6

SECTION IV

PERFORMANCE TESTS

4-1. INTRODUCTION.

4-2. The procedures in this section test the instrument's electrical performance using the specifications of table 1-1 as the performance standards. All tests can be performed without access to the interior of the instrument.

4-3. EQUIPMENT REQUIRED.

4-4. Equipment required for the performance tests is listed in section I, table 1-4. Any equipment that satisfies the critical specifications given in the table may be substituted for the recommended models.

4-5. TEST RECORD.

4-6. Results of the performance test may be tabulated on the Performance Test Record at the end of this section. The test record lists the tested specifications and their acceptable limits. The results recorded at incoming inspection can be used for comparison in periodic maintenance, troubleshooting, and after repairs or adjustment.

4-7. CALIBRATION CYCLE.

4-8. Periodic performance verification is not normally required for this instrument. The performance checks should be made after service work has been performed or if improper operation is suspected.

4-9. Further checks that require access to the inside of the instrument are included in the adjustment section, but they are not required checks.

NOTE

The following Performance Tests are written for the standard instrument only. If optional attenuators have been installed or input polarities changed, readjust all input signals accordingly.

PERFORMANCE TESTS

4-10. AMPLIFIER BANDWIDTH.

SPECIFICATION:
DC to 5 MHz (3 dB down at 5 MHz).

DESCRIPTION:
A function generator is used to provide the reference signal. A monitor oscilloscope is used to check for a constant signal at the display input connectors.

EQUIPMENT REQUIRED:
Function Generator
Monitor Oscilloscope

PROCEDURE:

a. Connect equipment as shown in figure 4-1.

b. Apply a 600 mV, 50 kHz sine wave from function generator to the X-INPUT.

c. Readjust the output of the function generator for exactly 12.7 cm (5 in.) of deflection.

d. Note the above signal level on the monitor oscilloscope.

e. Change signal frequency to 5 MHz and readjust output of function generator for the same signal level obtained in step d.

f. The amplitude measured on the display should be equal to or greater than 9.4 cm (3.7 in.).

For Y-amplifier bandwidth, apply the function generator output to the Y-INPUT and repeat steps b through f.

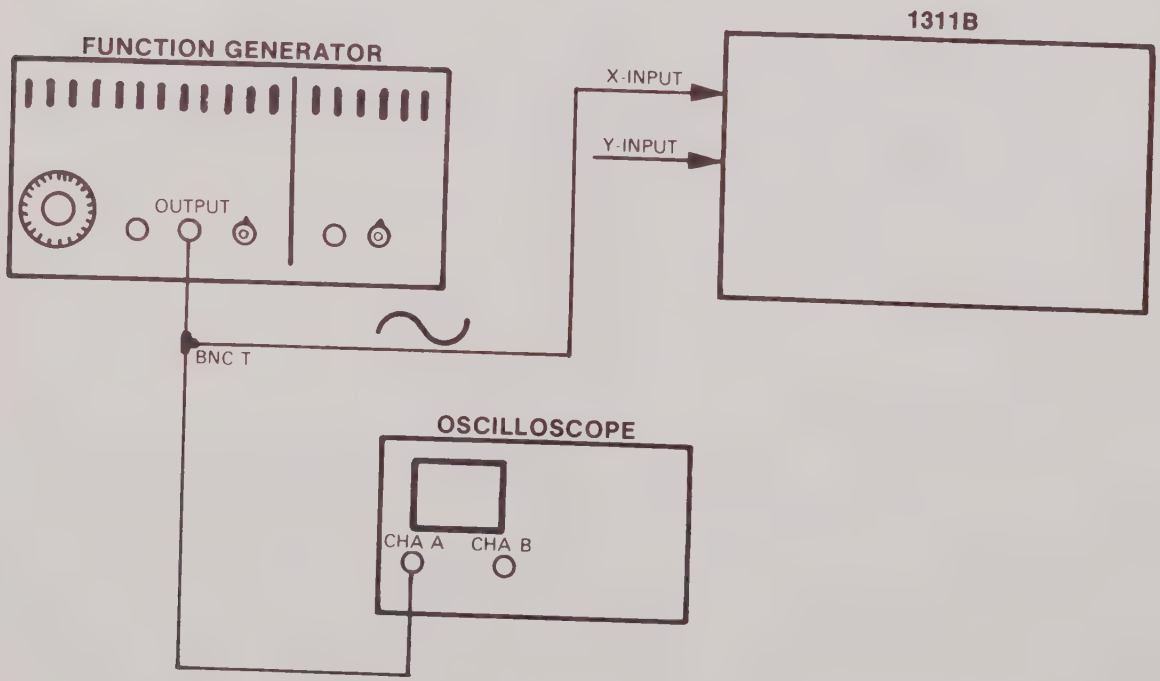

Figure 4-1. Amplifier Bandwidth Test Setup

PERFORMANCE TESTS

4-11. X-DEFLECTION FACTOR.

SPECIFICATION:
Gain must be variable from 39.4 mV/cm (100 mV/in.) to 68.9 mV/cm (175 mV/in.).

DESCRIPTION:
The X-GAIN control must vary the trace length from 14.5 cm (5.7 in.) to 25.4 cm (10 in.) with an input signal of 1 V.

EQUIPMENT REQUIRED:
Function Generator
Monitor Oscilloscope

PROCEDURE:
a. Connect equipment as shown in figure 4-2.

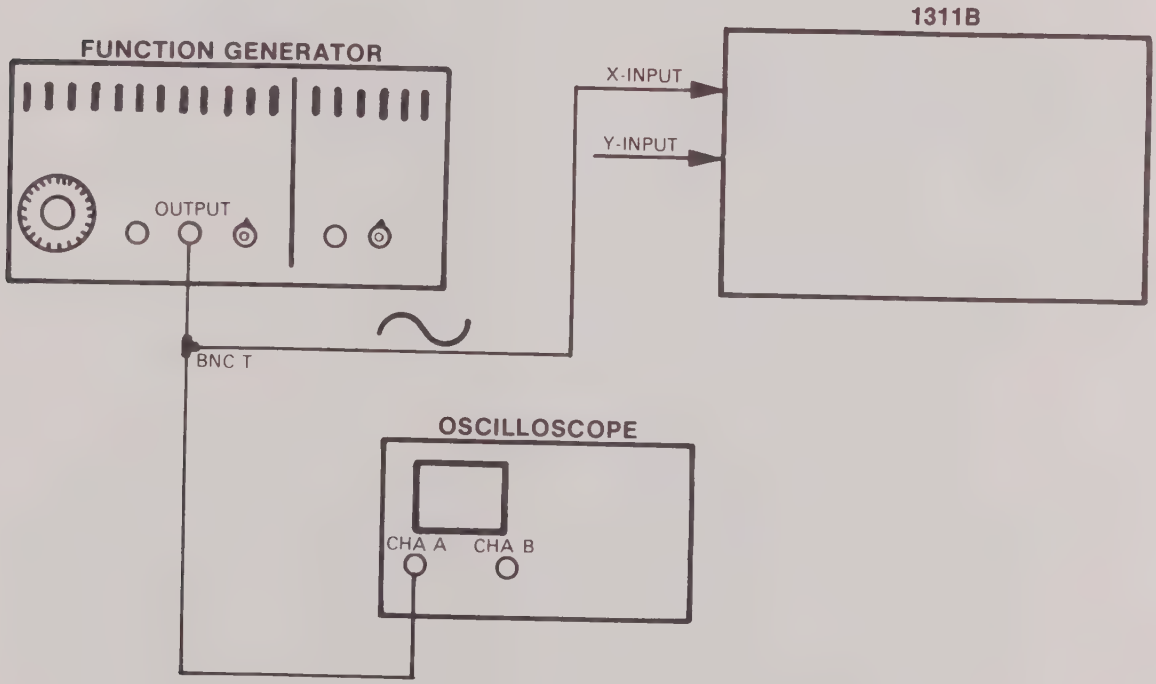

Figure 4-2. X-deflection Factor Test Setup

b. Adjust output of function generator for 1 V, 1 kHz sine wave (check function generator amplitude with monitor oscilloscope).

c. Turn front panel X-GAIN control fully counterclockwise and check for a trace length of <14.5 cm (5.7 in.).

d. Rotate the X-GAIN control fully clockwise and check for a trace length of >25.4 cm (10 in.).

PERFORMANCE TESTS

4-12. Y-DEFLECTION FACTOR.

SPECIFICATION:
Gain must be variable from 39.4 mV/cm (100 mV/in.) to 68.9 mV/cm (175 mV/in.).

DESCRIPTION:
The Y-GAIN control must vary the trace length from 14.5 cm (5.7 in.) to 25.4 cm (10 in.) with an input signal of 1 V.

EQUIPMENT REQUIRED:
Function Generator
Monitor Oscilloscope

PROCEDURE:
a. Connect equipment as shown in figure 4-3.

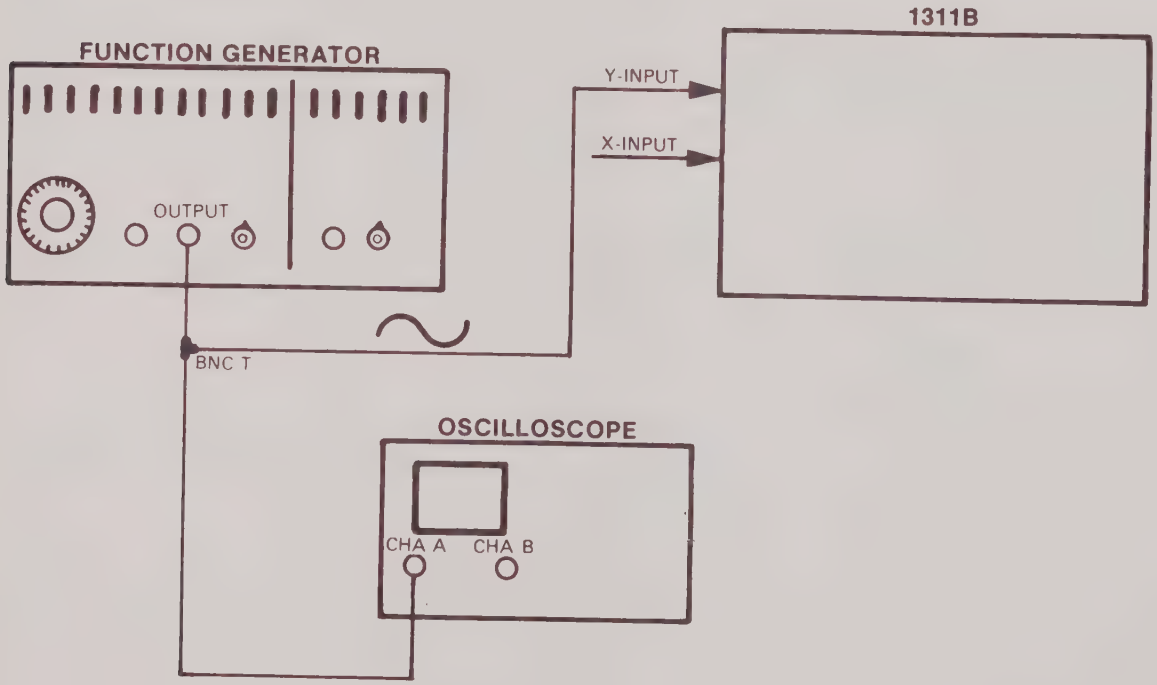

Figure 4-3. Y-deflection Factor Test Setup

b. Adjust function Generator for a 1 V, 1 kHv sine wave (check function generator amplitude with monitor oscilloscope).

c. Turn front panel Y-GAIN control fully counterclockwise and check for a trace length of <14.5 cm (5.7 in.).

d. Rotate the Y-GAIN control fully clockwise and check for a trace length of >25.4 cm (10 in.).

PERFORMANCE TESTS

4-13. REPEATABILITY.

SPECIFICATION:
<0.15% of full screen error in readdressing any point on screen from any other point on screen.

DESCRIPTION:
This test verifies amplifier performance stability with a varying input signal.

EQUIPMENT REQUIRED:
Pulse Generator

PROCEDURE:
a. Connect equipment as shown in figure 4-4.

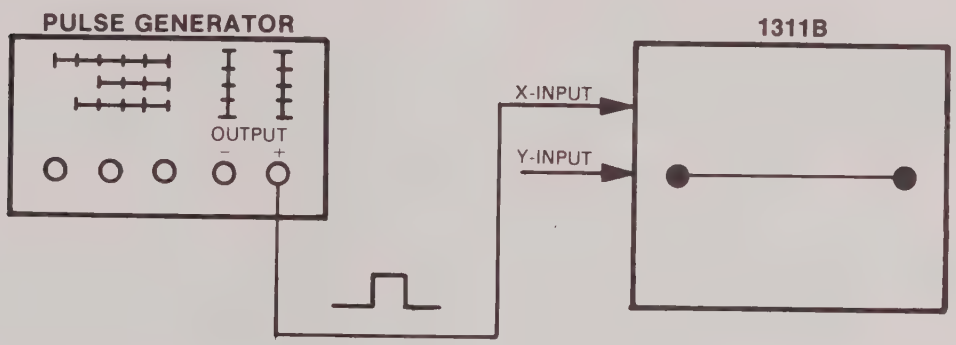

Figure 4-4. Repeatability Test Setup

b. Set frequency of pulse generator for a 10 kHz signal. Adjust display POSITION controls to bring trace on screen. Set pulse generator amplitude for full screen deflection. (See figure 4-4).

c. Vary the frequency of the pulse generator from 1 kHz to 100 kHz and notice the position change of the spot. Spot movement should be less than 1 spot diameter.

d. Disconnect function generator from X-INPUT and reconnect to Y-INPUT.

e. Repeat steps b and c for Y-deflection Amplifier.

PERFORMANCE TESTS

4-14. CROSSTALK.

SPECIFICATION:
<0.38 mm (0.015 in.) with one input terminated in 50Ω and the other input driven by 1 V, 500 kHz signal.

DESCRIPTION:
Crosstalk between deflection amplifiers is determined by measuring tracewidth when one input is terminated in 50Ω or a BNC shorting cap and a 1 V, 500 kHz is applied to the other input.

EQUIPMENT REQUIRED:
Function Generator.

PROCEDURE:
a. Connect equipment as shown in figure 4-5.

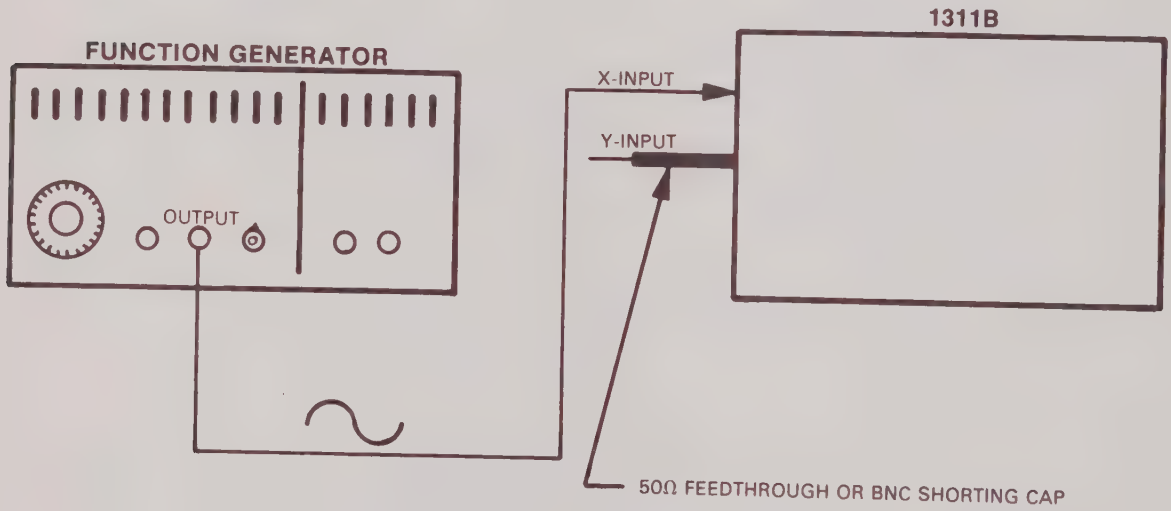

Figure 4-5. Cross Talk Test Setup

b. Apply a 1 V p-p, 500 kHz sine wave from function generator to X-INPUT.

c. Set front panel X and Y GAIN controls fully clockwise and check for no visible change in tracewidth.

d. Reverse connections to X and Y INPUT and repeat steps b and c.

PERFORMANCE TESTS

4-15. Z-AXIS BLANKING POLARITY.

SPECIFICATION:
-1 Vdc (INTENSITY at maximum) blanks trace. 1 Vdc (INTENSITY at minimum) provides maximum trace intensity.

DESCRIPTION:
With INTENSITY set to maximum, a -1 Vdc signal at the Z-INPUT shall blank the CRT. With INTENSITY set to minimum a +1 Vdc signal at the Z-INPUT provides maximum trace intensity.

EQUIPMENT REQUIRED:
Function Generator

PROCEDURE:
a. Connect equipment as shown in figure 4-6.

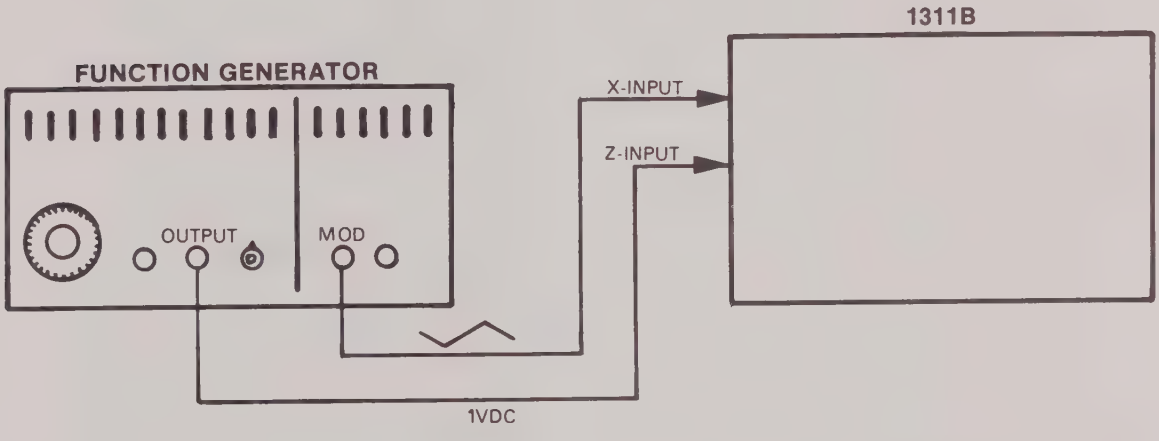

Figure 4-6. Z-axis Blanking Polarity Test Setup

b. Apply +1 Vdc to Z-INPUT and check for maximum trace intensity. INTENSITY control should have no effect on trace brightness.

c. Apply -1 Vdc to Z-INPUT and check for no trace on screen. INTENSITY control should not bring trace on screen.

PERFORMANCE TESTS

4-16. BINARY GRAY SHADE.

SPECIFICATION:

3-bit TTL level input providing 7 gray shades (beam intensities) and blanking.

DESCRIPTION:

The Z-axis board must provide 7 beam intensities as well as a blanked beam when the 3-bit words shown in Table 4-1 are presented to the BINARY Z-INPUT.

Table 4-1. Binary Gray Shades

Binary Word	HP 1351A Command NO BLINK/BLINK*	Beam Intensity
000	WX0/WX8	Brightest
001	WX1/WX9	2nd "
010	WX2/WX10	3rd "
011	WX3/WX11	4th "
100	WX4/WX12	5th "
101	WX5/WX13	6th "
110	WX6/WX14	Dimmest
111	WX7/WX15	Blanked

*HP 1351A I/O Board Blink Switch "on".

PROCEDURE:

a. Set Display INTENSITY Control fully clockwise.

b. Connect equipment as shown in figure 4-7.

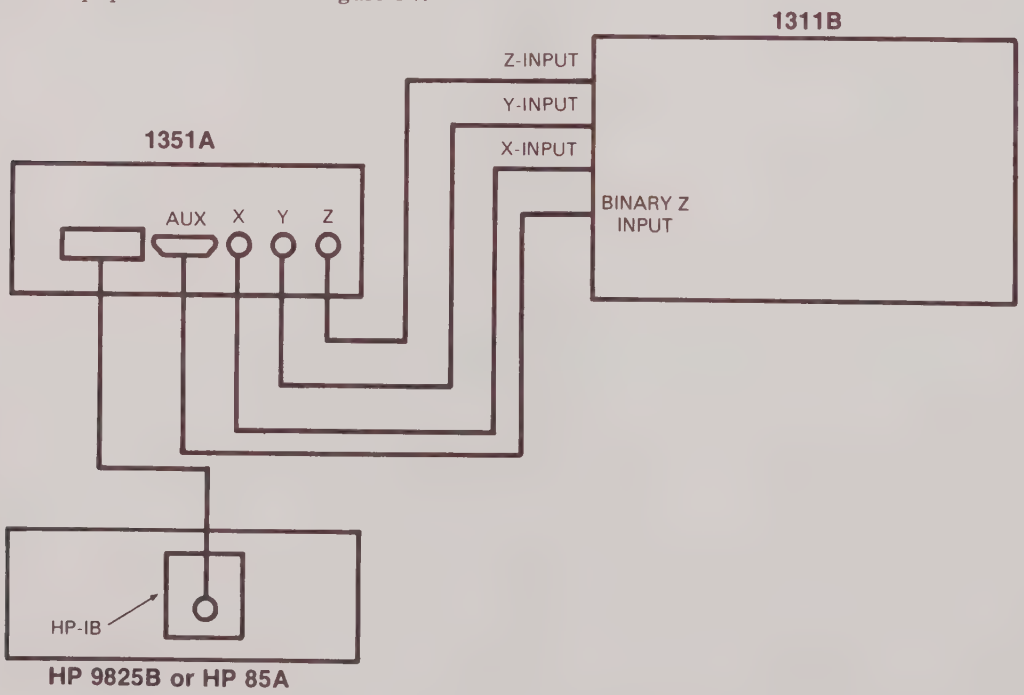

Figure 4-7. Binary Gray Shade Test Setup

c. If using an HP 9825B Desktop Computer, load and run Binary Gray Shade Test Pattern program* shown in table 4-2. If using an HP 85A, load and run the program* shown in table 4-3.

*The program is not available on tape.

PERFORMANCE TESTS

Table 4-2. Binary Gray Shade Test Pattern Program for HP 9825B

```
0: fxd Ø
1: cli 7
2: wrt 718,"em::en::ex::sn::sx::um::"
3: fmt 1,c2,f2.Ø,",::"
4: fmt 2,c8,f4.Ø,",",f4.Ø,";::"
5: 42Ø→X;575→Y
6: wrt 718,"peØ,::pa42Ø,575;::"
7: Ø→A;7→B
8: for H=1 to 2
9: for I=A to B
10: wrt 718.1,"wx",I
11: for J=Ø to 19
12: wrt 718.2,"pe1,::pa",X+J,Y+1ØØ
13: wrt 718.2,"pe1,::pa",X+J+1,Y
14: next J
15: X+2Ø→X
16: next I
17: 8→A;15→B
18: 42Ø→X;45Ø→Y
19: wrt 718,"peØ,::pa42Ø,45Ø;::"
20: next H
21: wrt 718,"wx8,::pe1,::pa581,45Ø;581,55Ø;421,55Ø;42Ø,45Ø;::"
22: wrt 718,"peØ,::pa581,575;::"
23: wrt 718,"wxØ,::pe1,:pa581,675;421,675;42Ø,575;581,575;::"
24: wrt 718,"peØ,::pa445,685;::pe1,::csØ,::txBINARY Ø-7"
25: wtb 718,3,13,1Ø
26: wrt 718,"peØ,::pa435,415;::pe1,::txBINARY 8—15"
27: wtb 718,3,13,1Ø,"peØ,::"
*16777
```

Table 4-3. Binary Gray Shade Test Pattern Program for HP 85A

```
1Ø FXD Ø
2Ø IMAGE 8A,4D,A,4D,2A
3Ø IMAGE 2A,2D,3A
4Ø RESET 7
5Ø OUTPUT 718  ;"EM:SN:EN:UM:"
6Ø X=42Ø @ Y=575
7Ø OUTPUT 718 ;"PEØ,::PA42Ø,575;:"
8Ø A=Ø @ B=7
9Ø FOR H=1 TO 2
1ØØ FOR I=A TO B
11Ø OUTPUT 718 USING 3Ø ; "WX",I,",::"
12Ø FOR J=Ø TO 19
13Ø OUTPUT 718 USING 2Ø ; "PE1,:PA",X+J,",",Y+1ØØ,";:"
14Ø OUTPUT 718 USING 2Ø ; "PE1,:PA",X+J+1,",",Y,";:"
15Ø NEXT J
16Ø X=X+2Ø
17Ø NEXT I
18Ø A=8 @ B=15
19Ø X=42Ø @ Y=45Ø
2ØØ OUTPUT 718 ;"PEØ,::PA42Ø,45Ø;::"
21Ø NEXT H
22Ø OUTPUT 718 ;"WX8,::PE1,::PA581,45Ø;581,55Ø;421,55Ø;42Ø,45Ø;::PEØ,::PA581,575;::"
23Ø OUTPUT 718 ;"WXØ,:PE1,:PA581,675;421,675;42Ø,575;581,575;::"
24Ø OUTPUT 718 ;"PEØ,::PA445,685;::PE1,::CSØ,::TXBINARY Ø-7",CHR$(3)
25Ø OUTPUT 718 ;"PEØ,::PA435,415;::PE1,::TXBINARY 8-15",CHR$(3)
26Ø OUTPUT 718 ;"PEØ,::"
27Ø END
```

d. Seven blinking and non-blinking beam intensities should be displayed similar to figure 4-8.

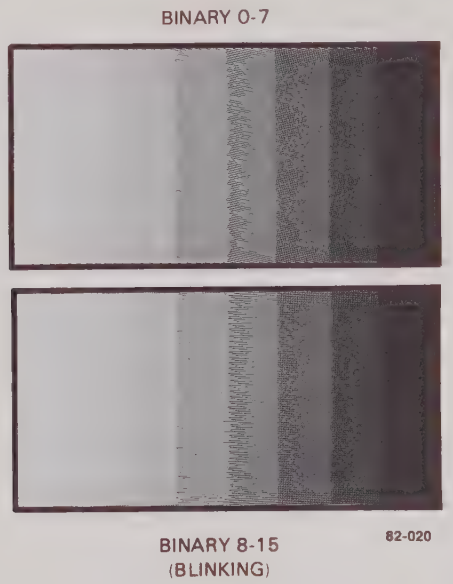

Figure 4-8. Binary Gray Shade Test Pattern

PERFORMANCE TESTS

4-17. SETTLING TIME.

SPECIFICATION:
1 V Input <500 ns.

DESCRIPTION:
The CRT beam, when moved from one position to another, must settle to within 1 spot diameter in less than 500 ns for a 1 V input.

PROCEDURE:
a. Set Display INTENSITY Control fully counterclockwise.

b. Connect equipment as shown in figure 4-9. Do not connect Z-INPUT at this time.

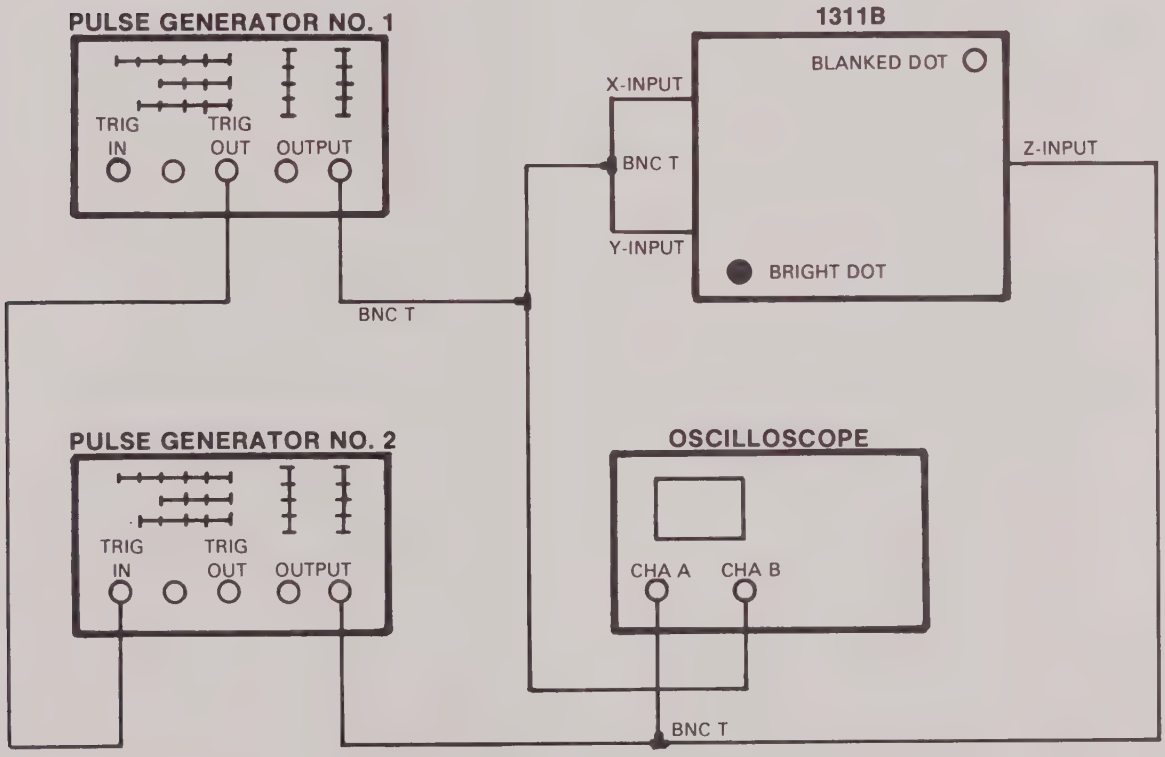

Figure 4-9. Settling Time Test Setup

c. Using the monitor oscilloscope adjust Pulse Generator No. 1 to 10 μs.

d. Adjust output amplitude of Pulse Generator No. 1 for 1 V.

e. Using the monitor oscilloscope, adjust Pulse Generator No. 2 for a .2 μs wide 2 V p-p pulse with –1V offset.

f. Connect Z-INPUT and adjust pulse amplitude and offset if needed. Adjust Display INTENSITY to view one dot only. (See figure 4-9.)

g. Check monitor oscilloscope for the following display (figure 4-10).

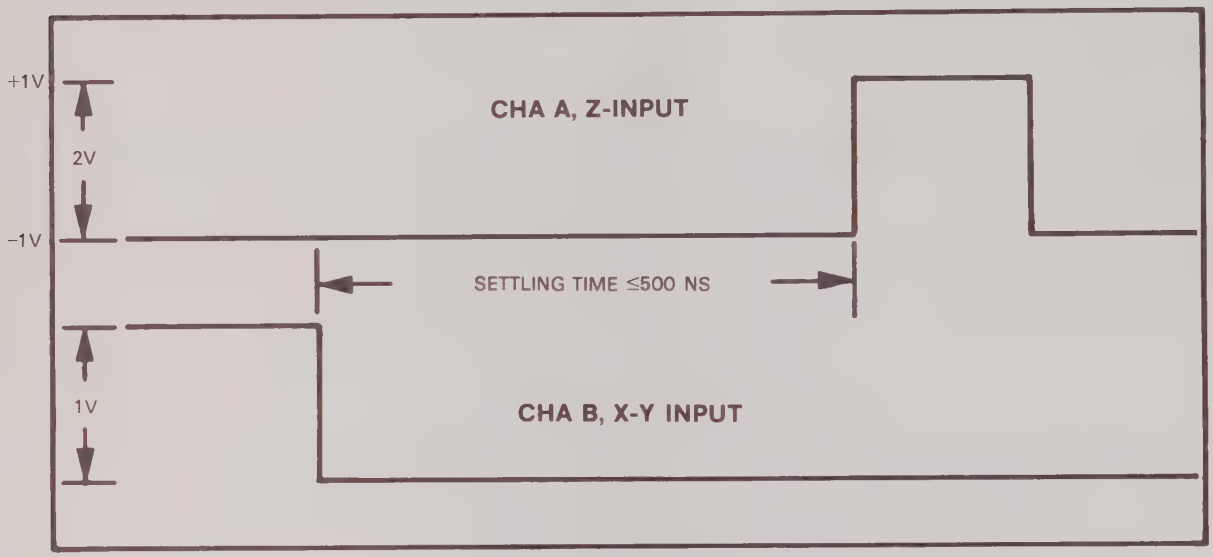

Figure 4-10. Settling Time Measurement with 1 V Input

h. Monitor the display and adjust the PULSE DELAY VERNIER on Pulse Generator No. 2 until a tail appears on the bright dot.

i. When the tail measures 1 dot diameter measure the time difference between the pulses displayed on the monitor oscilloscope. Time between pulses must not exceed 500 ns.

PERFORMANCE TEST RECORD

HEWLETT-PACKARD

MODEL 1311B

X-Y DISPLAY

SERIAL NO. _____

Tested by _____

Date _____

Paragraph Number	Test	Min	Results Actual	Max
4-10	X- Y-bandwidth			
	X-bandwidth	≥9.4 cm (3.7 in.)	_____	
	Y-bandwidth	≥9.4 cm (3.7 in.)	_____	
	X- Y-deflection Factor			
4-11	X-deflection Factor	<14.5 cm (5.7 in.)	_____	>25.4 cm (10 in.)
4-12	Y-deflection Factor	<14.5 cm (5.7 in.)	_____	>25.4 cm (10 in.)
4-13	Repeatability			
	X-amplifier		_____	≤0.15%
	Y-amplifier		_____	≤0.15%
4-14	Crosstalk			
	X-amplifier to Y-amplifier		_____	≤0.38 mm (0.015 in.)
	Y-amplifier to X-amplifier		_____	≤0.38 mm (0.015 in.)
4-15	Z-axis Blanking Polarity			
	+1 Vdc (Max. Intensity)		_____	
	−1 Vdc (No Trace)		_____	
4-17	Settling Time			
	Large Signal (1.0 V)		_____	≤500 ns

SECTION V

ADJUSTMENTS

5-1. INTRODUCTION.

5-2. This section describes adjustments and checks required to return the instrument to peak operating capabilities when repairs have been made. Included in this section are equipment setups and adjustment procedures.

5-3. SAFETY REQUIREMENTS.

5-4. Although this instrument has been designed in accordance with international safety standards, general safety precautions must be observed during all phases of operation, service, and repair of the instrument. Failure to comply with the precautions listed in the Safety Summary at the front of this manual or with specific warnings given throughout this manual could result in serious injury or death. Service and adjustments should be performed only by qualified service personnel.

5-5. EQUIPMENT REQUIRED.

5-6. A complete list of required test equipment is given in Section I, table 1-4. Test equipment equivalent to that recommended may be substituted, provided it meets the required characteristics. For best results, use recently calibrated test equipment.

5-7. ADJUSTMENTS.

5-8. The adjustment procedures are arranged in a recommended sequence of adjustments. While most adjustments may be made independent of other adjustments, it is recommended that adjustments be made sequentially as a number of adjustments are directly related to preceeding or following adjustments.

5-9. For best results, allow the instrument to warm up for 15 minutes before making adjustments. Adjustment locations for the Low Voltage and High Voltage Power Supplies are shown in figure 5-4. Figures 5-8,5-14 and 5-21, show adjustment locations for Z-axis amplifier, X-Y amplifiers, and focus and astigmatism amplifier respectively.

5-10. ADJUSTMENT PROCEDURES.

WARNING

ELECTRICAL SHOCK HAZARD

Use extreme caution when instrument covers are removed and power is applied. Voltages up to 24 kV are present around the CRT and HVPS areas and are capable of causing serious injury or death. Read the Safety Summary at the front of this manual before proceeding.

ADJUSTMENTS

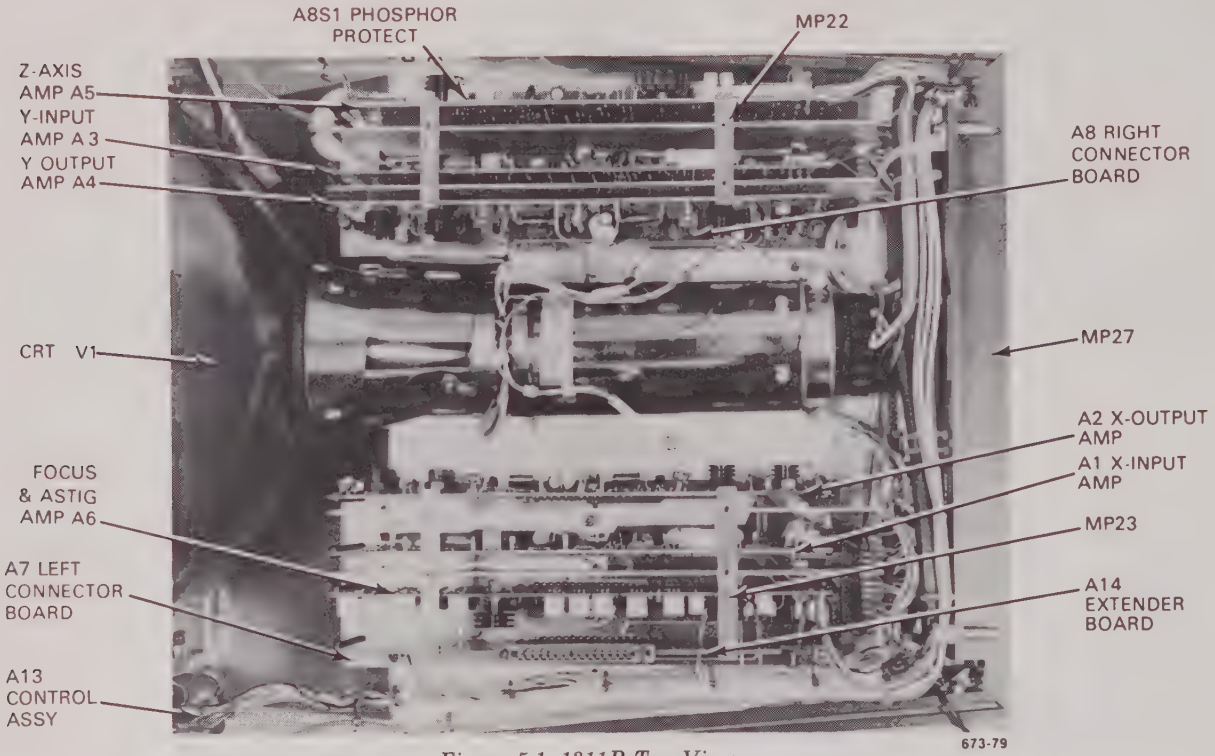

Figure 5-1. 1311B Top View

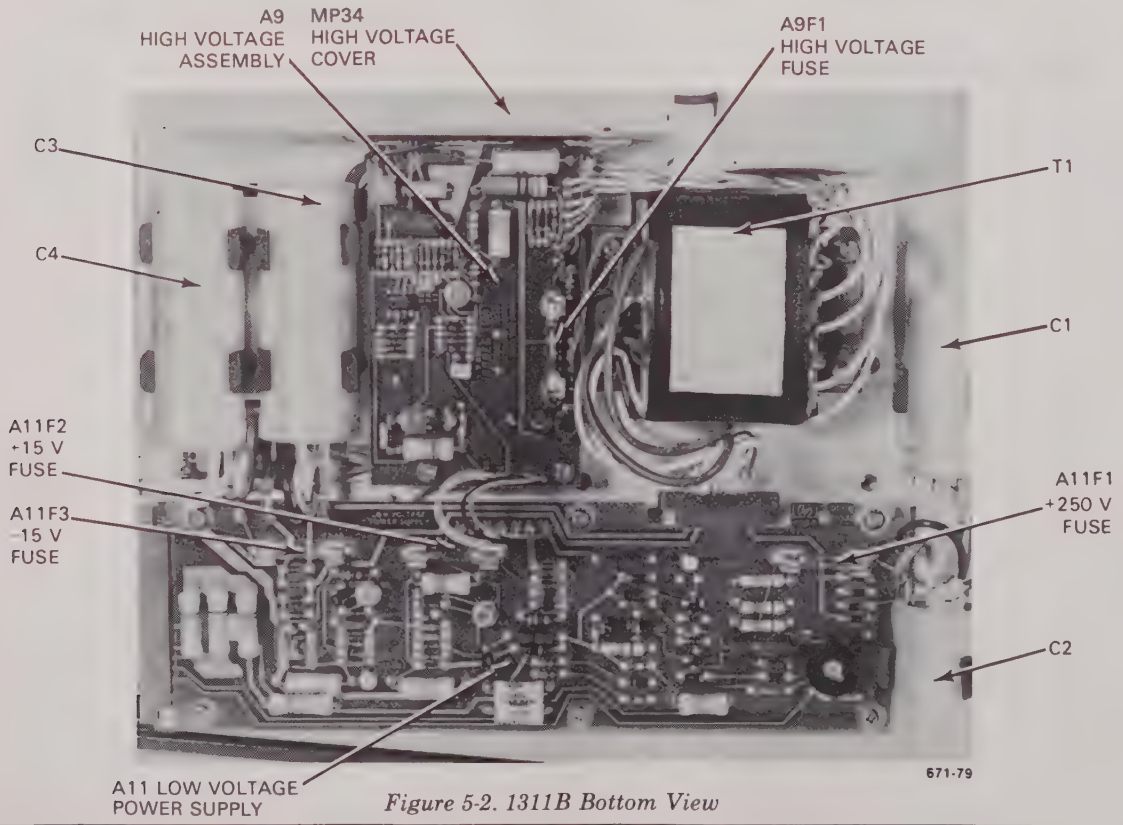

Figure 5-2. 1311B Bottom View

NOTE

The following Adjustment Procedures are written for the standard instrument only. If optional attenuators have been installed, readjust all input signal levels accordingly.

ADJUSTMENTS

5-11. LOW VOLTAGE POWER SUPPLY ADJUSTMENTS.

REFERENCE:
Service Sheet 8.

DESCRIPTION:
The +250 V and the –15 V are the adjustable power supplies. The +15 V supply is referenced to the –15 V supply. The +250 V supply is adjusted to within ±0.1 V. The –15 V supply is adjusted so that both +15 V and –15 V supplies are within ±0.1 V.

EQUIPMENT:
Digital Multimeter

PROCEDURE:

CAUTION

The +250 V supply is used as reference for the CRT cathode regulator circuit. Precise calibration of the +250 supply is essential for proper reference of the cathode supply. If the +250 V supply is not properly calibrated, the cathode voltage may exceed acceptable limits, and may cause activation of the HV shutdown circuit.

a. Connect digital voltmeter between red wire and chassis ground on the low-voltage power supply board A11.

b. Adjust the +250 V supply (A11R12) for +250 V ±0.1 V.

c. Alternately connect the digital voltmeter to the violet and white/red wire on low-voltage power supply board (A11) while adjusting the –15 V (A11R29) supply for equal error between the –15 V and +15 V supply. Final error on either supply must be $\leq$ ±0.1 V.

ADJUSTMENTS

5-12. HIGH VOLTAGE POWER SUPPLY.

NOTE

The following procedure need be performed only if repairs have been made to the high voltage power supply (A9) or if all of the high-voltage assembly has been replaced.

REFERENCE:
Service Sheet 7.

DESCRIPTION:
This procedure describes calibration of the high voltage shutdown circuit which ensures that the cathode voltage can never exceed –4750 V.

EQUIPMENT REQUIRED:
Digital Voltmeter
1000:1 Divider Probe

WARNING

Proper calibration of the high voltage shutdown circuit is necessary to prevent excessive cathode voltage being applied to the CRT. Cathode voltages in excess of –4750 V may result in x-ray emissions exceeding .5 mR/hr. Proper operation of the high voltage shutdown circuit ensures that x-ray emissions do not exceed .5 mR/hr under normal operating conditions, and under misadjustment and failure conditions. See Section VIII for Theory of Operation.

PROCEDURE:

a. Measure the +250 V power supply and ensure a reading of +250.1 V to 249.9 V. If necessary, readjust the +250 V power supply (see paragraph 5-11).

b. Check the accuracy of the 1000:1 Divider Probe by measuring the +250 V power supply using the digital voltmeter and the 1000:1 Divider Probe. Record the reading as V_{CAL}.

c. Measure the cathode voltage (4 wire on the A5 board) with the digital voltmeter and the 1000:1 Divider Probe. Record the reading as V_K.

d. Plot V_{CAL} and V_K on the Nomograph in figure 5-3. If V_{CAL} plots off the Nomograph, then the 1000:1 Divider Probe does not meet the required ±3% accuracy. If V_K on V_C plot off the Nomograph, then one or more of the following resistors must be out of tolerance: A9R3; A9R4; A9R24.

WARNING

A9TP3 is +250 V dcs.

e. Temporarily connect resistor "R" (value obtained from figure 5-3) between A9TP2 and A9TP3, in parallel with A9R3 (909 kΩ). If the addition of resistor "R" triggers the high-voltage shutdown circuit, (A9TP1 becomes positive and high-voltage shuts down), remove "R" and proceed to the next test. The shutdown takes a few seconds to occur due to the time constant of the circuit.

f. If the addition of resistor "R" does not trigger the high voltage shutdown circuit (A9TP1 remains negative), remove in sequence A9E1, A9E2, and A9E3 until A9TP1 becomes positive and high voltage shutdown occurs. Leave out the required jumper (A9E1, A9E2, A9E3) when high voltage shutdown has been achieved. Complete the adjustment by removing resistor "R".

g. If high voltage shutdown can not be accomplished check the tolerance of the following components:

A9VR3 — should be 5.11 V ±2% (5.01 V to 5.21 V)
A9R21 — should be 38.3k ±1% (37.917k to 38.683k)
A9R22 — should be 274 kΩ ±1% (301.4k to 246.6k)
A9R24 — should be 30 MΩ ±1% (29.7 MΩ to 30.3 MΩ).

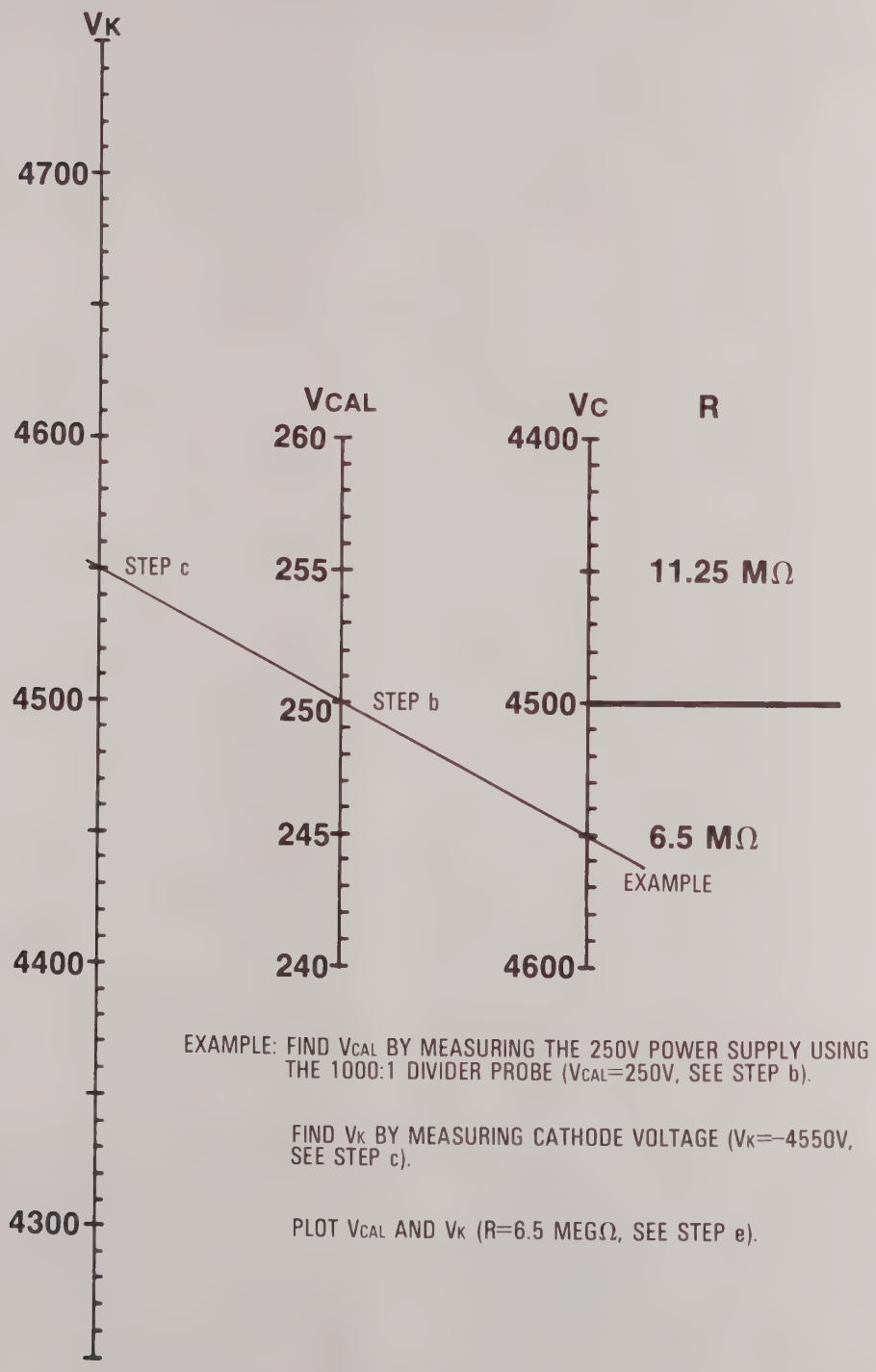

Figure 5-3. High Voltage Shutdown Circuit Nomograph

ADJUSTMENTS

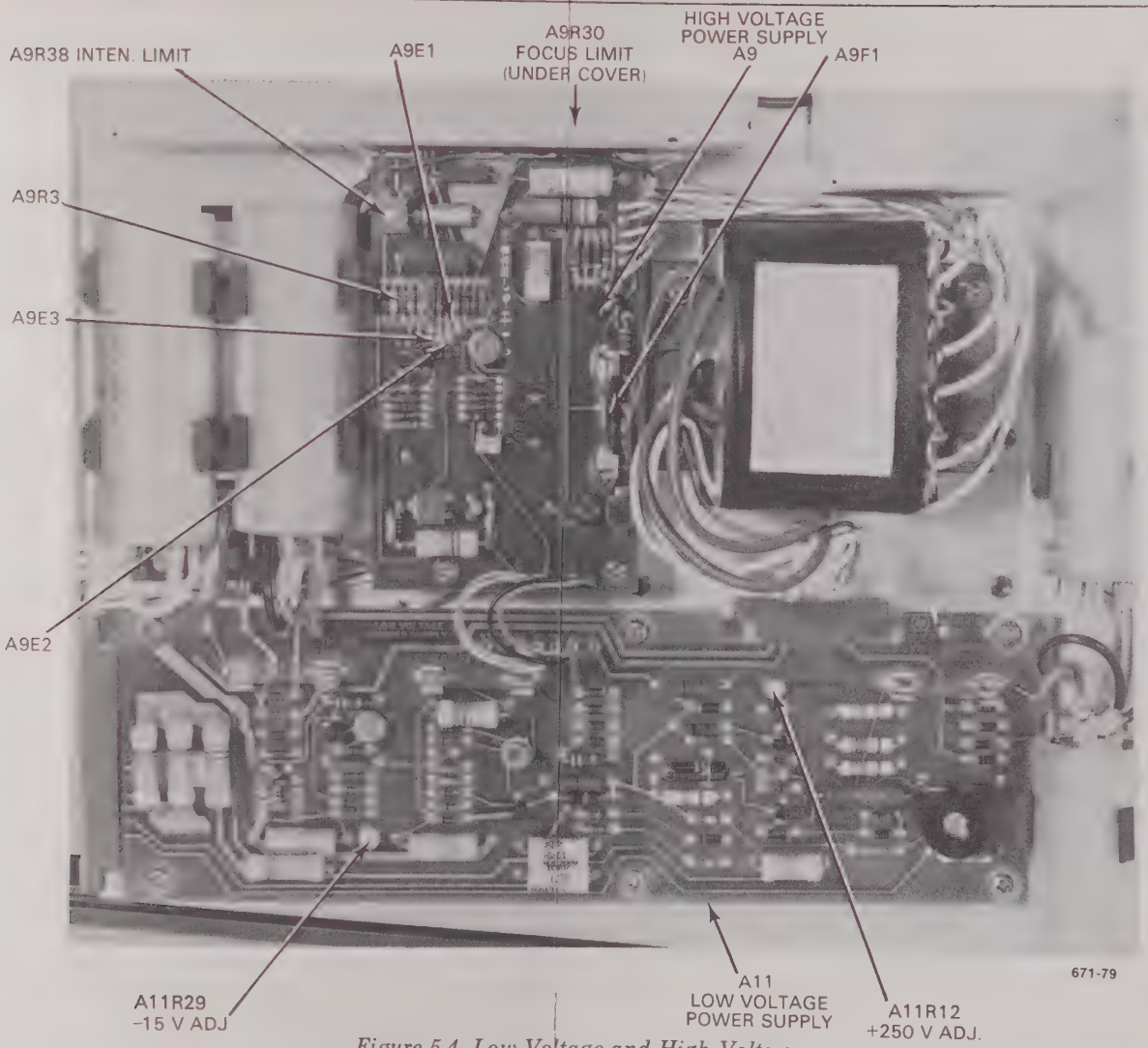

Figure 5-4. Low Voltage and High Voltage Power Supply Adjustment Locations

Table 5-1. Low Voltage and High Voltage Power Supply Adjustments

Reference Designator	Adjustment Name	Adjustment Paragraph	Service Sheet	Description
A11R12	+250 V SUPPLY	5-11	8	Adjust supply for 250 V ±0.1 V
A11R29	–15 V SUPPLY	5-11	8	Adjust –15 V and +15 V Supply for equal error not exceeding ±.1 V
A9E1 A9E2 A9E3	HIGH VOLTAGE SHUTDOWN	5-12	7	Check for high voltage shutdown below –4750 V

ADJUSTMENTS

k. With INTENSITY control full CCW, adjust G Bal (A5R16) for a maximum signal level at A5TPZ of 30 volts (10 volts drive above the 20 volt offset level). The signal should have positive gain. (If using a pulse generator, adjust G Bal for same amplitude signal as above, +10 volt pulse above +20 volt offset level.)

l. Turn INTENSITY full CW. If V CUTOFF (see step G.) was ≥63 volts, adjust G Cal (A5R17) for a maximum signal level of +70 volts at A5TPZ. If amplifier begins to compress signal, reduce <3 volts. If V CUTOFF was <63 volts then adjust G Cal (A5R17) to set maximum signal level at A5TPZ to: 20V + (.8)(V CUTOFF). (If using a pulse generator, adjust for same signal level as when using graphics generator.)

m. If using graphics generator, connect the Binary Input Cable. Seven blinking and non-blinking intensity levels should be visible (see figure 5-6).

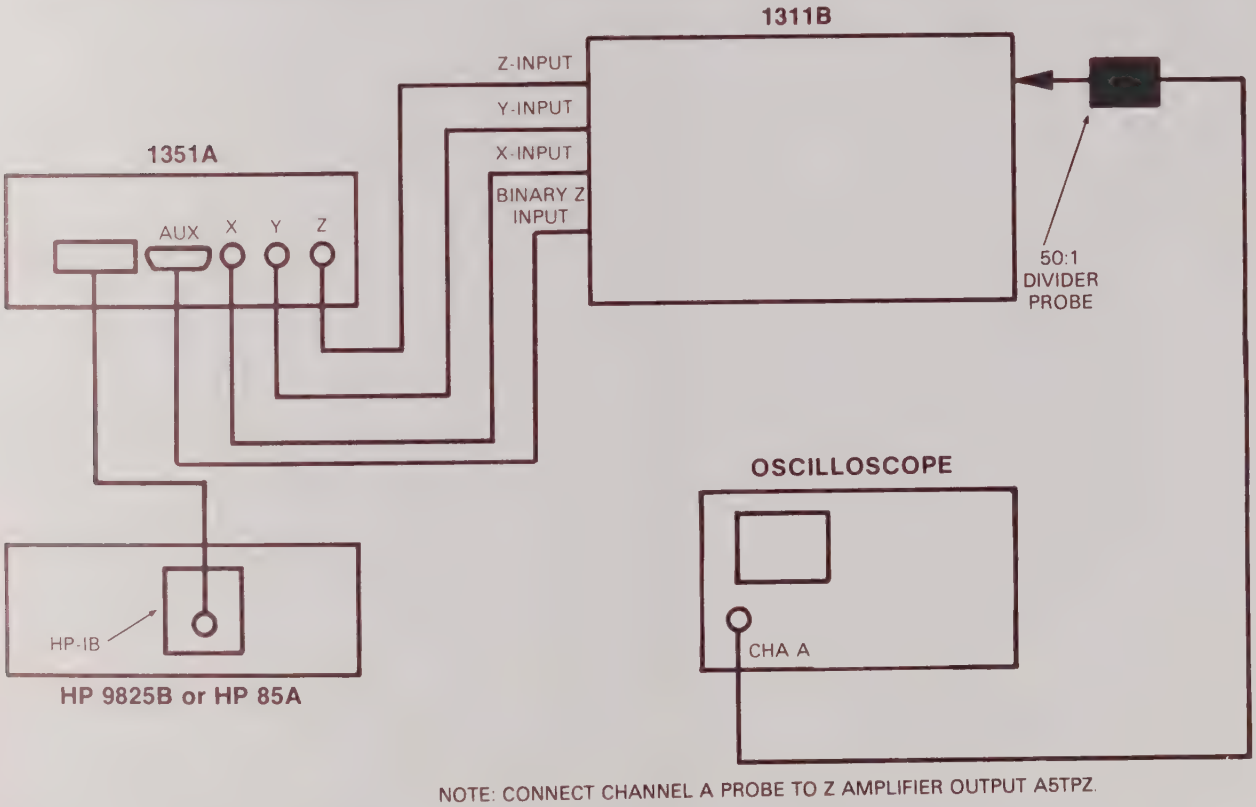

Figure 5-5. Binary Gray Shade Test Setup

Figure 5-6. Gray Shade Test Pattern

ADJUSTMENTS

5-14. Z-AXIS OFFSET, BALANCE, INTENSITY LIMIT, AND GAIN ADJUSTMENTS. OPTION 003 (INTENSITY AS BRIGHTNESS) CONFIGURATION.

REFERENCE:

Service Sheets 4 and 7. Refer to Table 3-6 for jumper configuration.

DESCRIPTION:

Offset adjustment sets the DC level of Z-axis output amplifier. Balance adjustment sets the reference level for the gain stages. Intensity Limit adjustment sets the amount of gain introduced by INTENSITY control. Gain Calibration and Level adjustments set maximum Z-axis amplifier gain.

EQUIPMENT:

Monitor Oscilloscope
Digital Voltmeter
Pulse Generator
Low Capacitance 50:1 Divider Probe

PROCEDURE:

a. With instrument power off, preset the adjustments as follows:

Offset	(A5R21)	full CW
G Bal	(A5R16)	full CCW
Bal	(A5R19)	Midrange
G Cal	(A5R17)	Midrange
Level	(A5R45)	Midrange (Not on Z-Axis board P/N 01311-66505.)

b. Set Z-axis input impedance switch (A5S1) to the 50 ohm position.

c. Turn on instrument power.

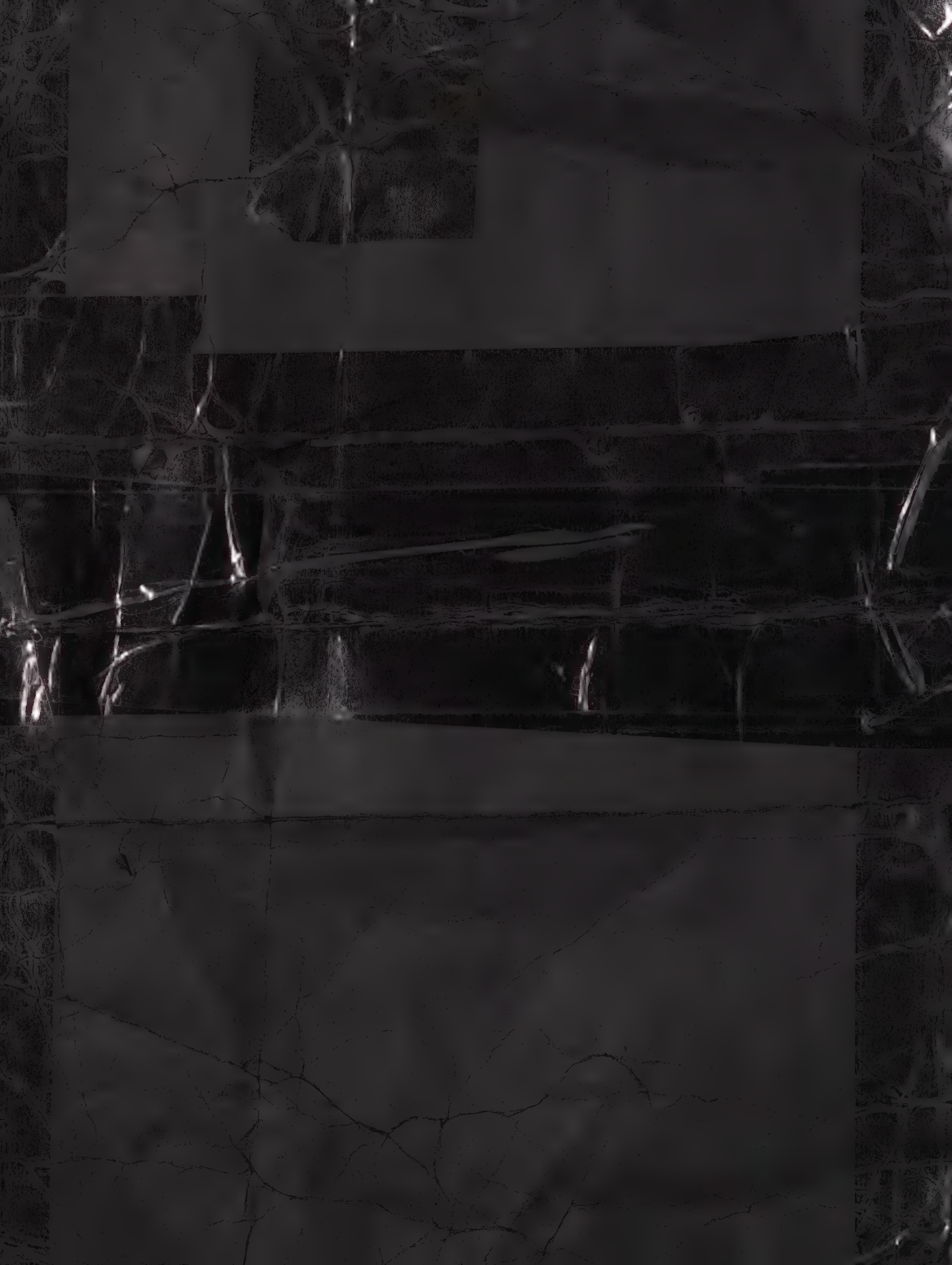

5-13. Z-AXIS OFFSET, BALANCE, INTENSITY LIMIT, AND GAIN ADJUSTMENTS. STANDARD (INTENSITY AS CONTRAST) CONFIGURATION.

REFERENCE:
Service Sheets 4 and 7.

DESCRIPTION:
The Offset adjustment sets the DC level of Z-axis gain stages. The Intensity Limit adjustment prevents CRT damage. The Gain Balance adjustment sets the amount of gain introduced by INTENSITY control and Binary Z-Input. The Gain Calibration sets the maximum Z-axis amplifier gain.

EQUIPMENT:
Monitor Oscilloscope
Digital Voltmeter
HP 1351A Graphics Generator
HP 9825A or HP85A Desktop Computer
HP 8120-2739 Binary Z-Input Cable
Low Capacitance 50:1 Divider Probe
Pulse Generator

PROCEDURE:

a. Turn instrument power off, remove high voltage fuse A9F1. Set Z-axis input impedance switch (A5S1) to 50 ohms. Set Phosphor Protect Switch (A8S1) off.

b. Preset the following adjustments as indicated:

Front Panel INTENSITY Control		full counterclockwise (CCW)
OFFSET	(A5R21)	Midrange
G BAL	(A5R16)	Midrange
BAL	(A5R19)	Midrange
G Cal	(A5R17)	Midrange
Level	(A5R45)	full counterclockwise (CCW) (This adjustment is not on Z-Axis board P/N 01311-66505.)

Turn on the instrument power.

c. (Skip this step on Z-Axis board P/N 01311-66505). Apply a 10 KHz, +1 V, 1 microsecond wide (1% duty cycle) pulse with 0 V baseline to Z-INPUT. Turn INTENSITY control full clockwise and adjust Level (A5R45) for a +71 V peak pulse at A5TPZ. Remove signal at Z-INPUT.

d. Adjust Offset (A5R21) for a +20 Volts at A5TPZ with INTENSITY control full CCW.

e. Adjust BAL (A5R19) for a 3 volt positive shift when INTENSITY control is rotated from full counterclockwise to full clockwise. After adjustment, turn INTENSITY control full CCW and turn the instrument off.

f. Replace the high voltage fuse A9F1 and turn on instrument power.

g. Adjust Intensity Limit (A9R38) until beam is just extinguished. Measure the voltage a A9C21 and record this value. The CRT cutoff value is this voltage minus 20 volts.

$$V_{CUTOFF} = V_{A9C21} - 20\ V$$

h. Adjust Intensity Limit (A9R38) for dim beam on CRT screen when INTENSITY control is full CCW.

i. Connect equipment as shown is figure 5-5, but do not connect the Binary Input Cable.

j. If using an HP 9825B Desktop Computer, load and run the Binary Gray Shade Test Pattern program shown in Section IV, Table 4-2. If using an HP85A, load and run the program shown in Table 4-3. (If a desktop computer and graphics generator is not available, apply a +1 V, 1 μs wide, 10 KHz pulse with 0 V baseline to Z-INPUT from a pulse generator and position beam off CRT screen.)

d. Position beam off CRT screen (beam may not be visible at this time).

e. Turn front panel INTENSITY control full CW.

f. (Skip this step on Z-Axis board P/N 01311-66505.) Adjust Level (A5R45) for +71 volts at A5TRZ.

g. Adjust offset (A5R21) for +65 volts at A5TPZ.

h. Turn front panel INTENSITY control full CCW and verify A5TPZ is less than +10 volts.

i. Apply 10 KHz, +1 volt pulse with 0 volt baseline to Z-Axis input.

j. Monitor A5TPZ with oscilloscope and turn INTENSITY control clockwise until baseline at A5TPZ begins to move positive.

k. Adjust G Cal (A5R17) for a pulse signal amplitude at A5TPZ of 50 volts p-p.

l. Remove Z-axis input signal and turn on Phosphor Protect Switch (A8S1).

m. Position beam on CRT screen and turn INTENSITY full clockwise. Verify A5TPZ is approximately 18 volts.

n. Adjust Intensity Limit A9R38 for a dim spot on CRT screen.

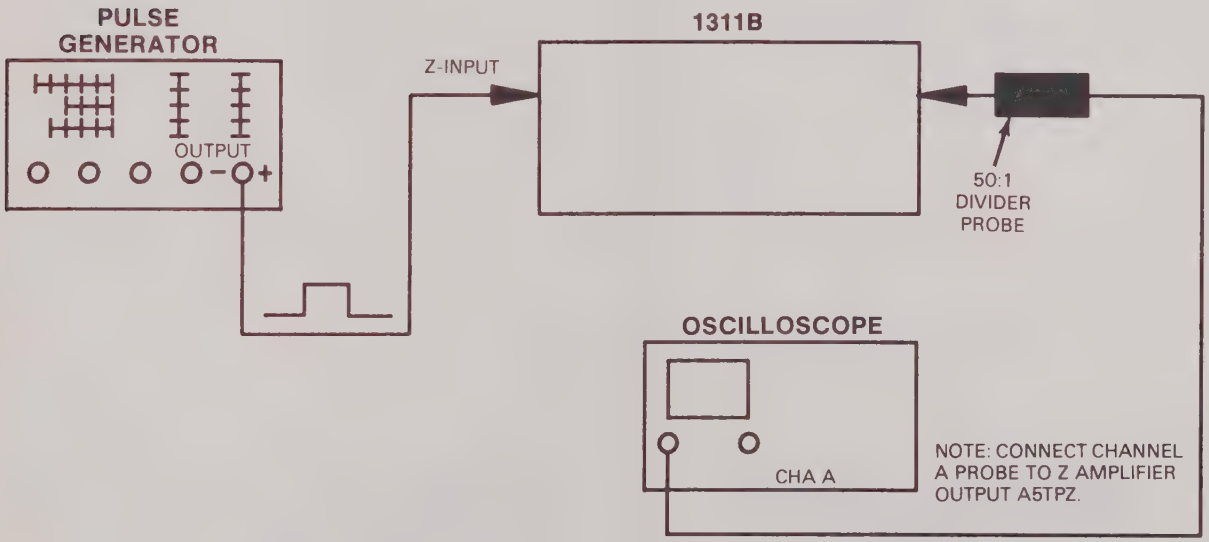

Figure 5-7. Z-axis Option 003 Test Setup

5-15. Z-AXIS AND FOCUS AMPLIFIERS PULSE RESPONSE.

REFERENCE:
Service Sheet 4 and 5.

DESCRIPTION:
The high frequency response adjustments (A5C6, A5R53) adjust the Z-axis amplifier pulse response for a fast rise time consistent with minimum overshoot (rise time = 25 nanoseconds, overshoot typically is 5%). The high frequency adjustments (A6C4, A6R47) adjust focus amplifier pulse response for ≤35 nanosecond risetime.

EQUIPIMENT:
Monitor Oscilloscope
Pulse Generator
Low Capacitance 50:1 Divider Probe

PROCEDURE:

a. Center X POSITION. Use Y POSITION to move beam slightly off screen. Apply 10 kHz, a +1 V, 1 microsecond wide, (1% duty cycle) pulse to the Z-axis INPUT.

b. Set front panel INENTISTY counterclockwise.

c. Connect the monitor oscilloscope to the Z-axis output (A5TPZ). Use the 50:1 divider probe.

d. Monitor the oscilloscope and adjust HF1 (A5C6) and HF2 (A5R53) to obtain a pulse of less than 25 nanosecond rise time with minimum perturbations (±5% typical).

e. Connect monitor oscilloscope to focus output (junction of A6Q25 and A6R102, see Figure 5-21).

f. Turn front panel INTENSITY full clockwise.

g. Adjust HF1 (A6C4) and HF2 (A6R47) for best pulse response (≤5% perturbations, ≤35 ns risetime).

h. Disconnect test equipment.

ADJUSTMENTS

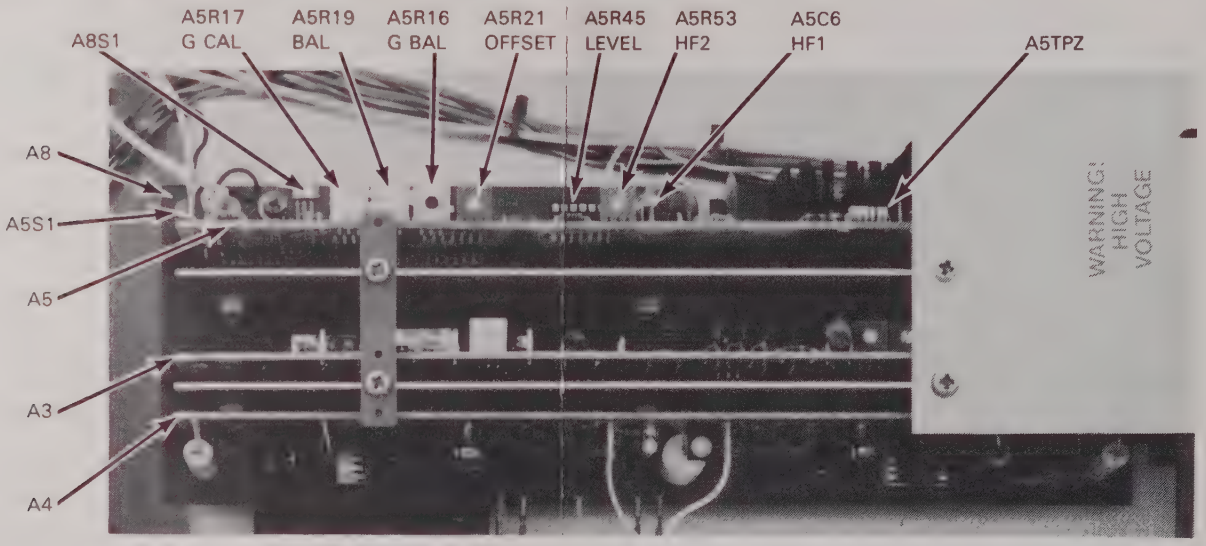

Figure 5-8. Z-axis Amplifier Adjustment Locations

Table 5-2. Z-axis Amplifier Adjustments

Reference Designator	Adjustment Name	Adjustment Paragraph	Service Sheet	Description
A5R21	Z-AXIS OFFSET	5-13	4	Adjust Z-OFFSET for 20 V output Z-AXIS output (A5TPZ)
A5R19	Z-AXIS BALANCE	5-13	4	Adjust for 3 V increase at Z-AXIS output when intensity control is turned from minimum to maximum
A1R16	Z-AXIS GAIN BALANCE	5-13	4	Adjust for 10 V p-p above V_{CUTOFF} at A5TPZ with INTENSITY Control counterclockwise
A9R38	INTENSITY LIMIT	5-13	7	Adjust for dimly visible dot on screen with INTENSITY at minimum and no Z-AXIS input
A5R17	Z-AXIS GAIN CAL	5-14	4	Adjust to 70 V at maximum signal peak (monitor at A5TPZ) with 1 V p-p Z input
A5R45	Z-AXIS LEVEL	5-13	4	Adjust to +71 V maximum level at A5TPZ
A5C6 A5R53	Z-AXIS HF1 Z-AXIS HF2	5-15	4	Adjust for pulse rise time of $\leq$25 ns

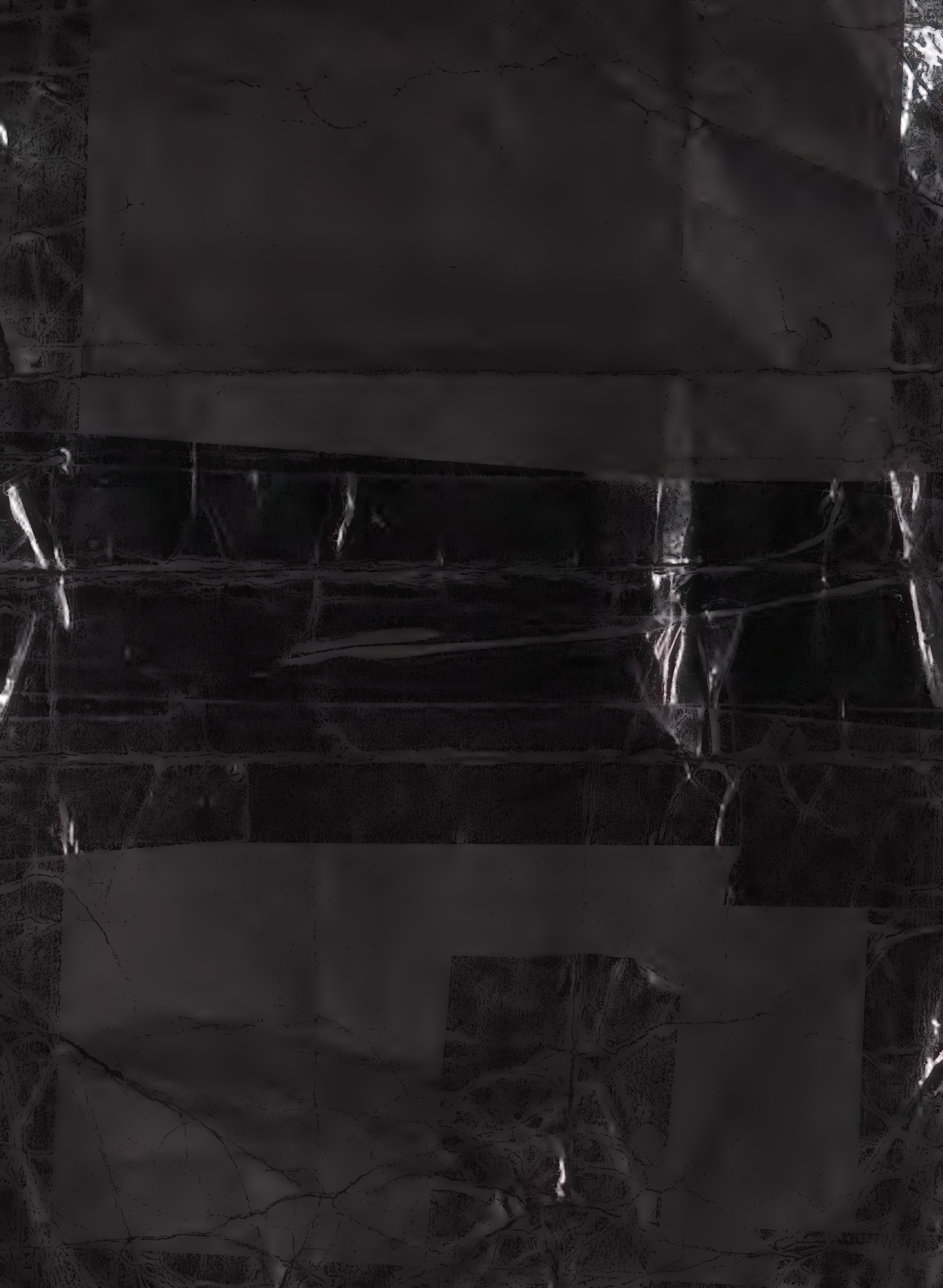

ADJUSTMENTS

5-17. Y-AMPLIFIER GAIN ADJUSTMENT.

REFERENCE:
Service Sheet 2.

DESCRIPTION:
The Y-amplifier Gain is adjusted so that the front panel Y-GAIN control varies the trace length from ≤11.2 cm (4.4 in.) to ≥19.6 cm (7.7 in.) with a 0.9 V input signal.

EQUIPMENT:
Function Generator
Monitor Oscilloscope

PROCEDURE:

a. Connect Equipment as shown in figure 5-9.

b. Set front panel Y-GAIN control fully clockwise.

c. Set Function Generator output as follows:

FREQUENCY ..... 1 kHz
FUNCTION ..... Sine Wave
AMPLITUDE ..... 0.9 V p-p as monitored on oscilloscope

d. Adjust Y-amplifier Gain A3R12 for slightly greater than 19.6 cm (7.7 in.) deflection.

e. Set front panel Y-GAIN fully counter clockwise and check for less than 11.2 cm (4.4 in.) of deflection.

ADJUSTMENTS

5-18. X-AMPLIFIER DC BALANCE ADJUSTMENT.

REFERENCE:
Service Sheet 2.

DESCRIPTION:
The X-amplifier Average and Balance adjustments (A1R64), A1R11) are set to minimize dc shift when the front panel X-GAIN control is rotated throughout its range.

EQUIPMENT:
Digital Voltmeter

PROCEDURE:

a. Remove ground strap from Digital Voltmeter and connect Voltmeter leads differentially to the horizontal deflection plates (9 and 5 wires on X-output amplifier, A2).

b. Set front panel X-POSITION control for a 0 V reading on Digital Voltmeter.

c. Disconnect Digital Voltmeter common lead and connect it to chassis ground.

d. Set Average adjustment (A1R64) for a reading of +108 V on Digital Voltmeter.

e. Turn front panel X-GAIN control back and forth between its clockwise and counterclockwise position while observing spot on display. Set Balance adjustment (A1R11) to minimize movement of spot. Spot movement shall not exceed 0.8 cm (0.3 in.).

5-19. Y-AMPLIFIER DC BALANCE ADJUSTMENT.

REFERENCE:
Service Sheet 2.

DESCRIPTION:
The Y-amplifier Average and Balance adjustments (A3R64), A3R11) are set to minimize dc shift when the front panel Y-GAIN control is rotated throughout its range.

EQUIPMENT:
Digital Voltmeter

PROCEDURE:

a. Remove ground strap from Digital Voltmeter and connect Voltmeter leads differentially to the vertical deflection plates (9 and 5 wires on Y-output amplifier, A4).

b. Set front panel Y-POSITION control for a 0 V reading on Digital Voltmeter.

c. Disconnect Digital Voltmeter common lead and connect it to chassis ground.

d. Set Average adjustment (A3R64) for a reading of +108 V on Digital Voltmeter.

e. Turn front panel X-GAIN control back and forth between its clockwise and counterclockwise position while observing spot on display. Set Balance adjustment (A3R11) to minimize movement of spot. Spot movement shall not exceed 0.8 cm (0.3 in.).

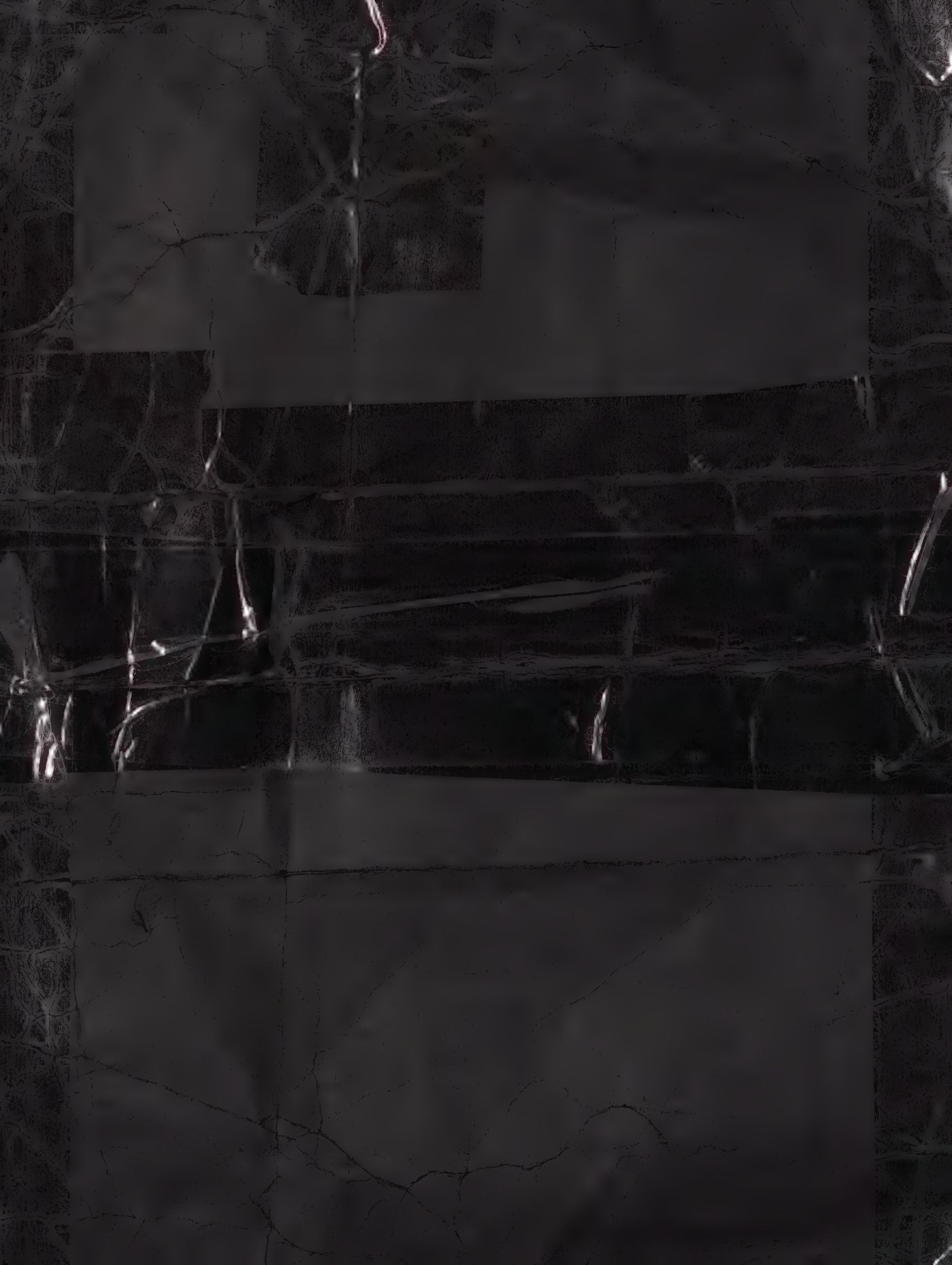

5-16. X-AMPLIFIER GAIN ADJUSTMENT.

REFERENCE:
Service Sheet 2.

DESCRIPTION:
The X-amplifier Gain is adjusted so that the front panel X-GAIN control varies the trace length from ≤14.7 cm (5.8 in.) to ≥25.4 cm (10 in.) with a 0.9 V input signal.

EQUIPMENT:
Function Generator
Monitor Oscilloscope

PROCEDURE:

a. Connect equipment as shown in figure 5-9.

b. Set front panel X-GAIN control fully clockwise.

c. Set Function Generator output as follows:

FREQUENCY ..... 1 kHz
FUNCTION ..... Sine Wave
AMPLITUDE ..... 0.9 V p-p as monitored on oscilloscope

d. Adjust X-amplifier Gain A1R12 for slightly greater than 25.4 cm (10 in.) deflection.

e. Set front panel X-GAIN fully counter clockwise and check for less than 14.7 cm (5.8 in.) deflection.

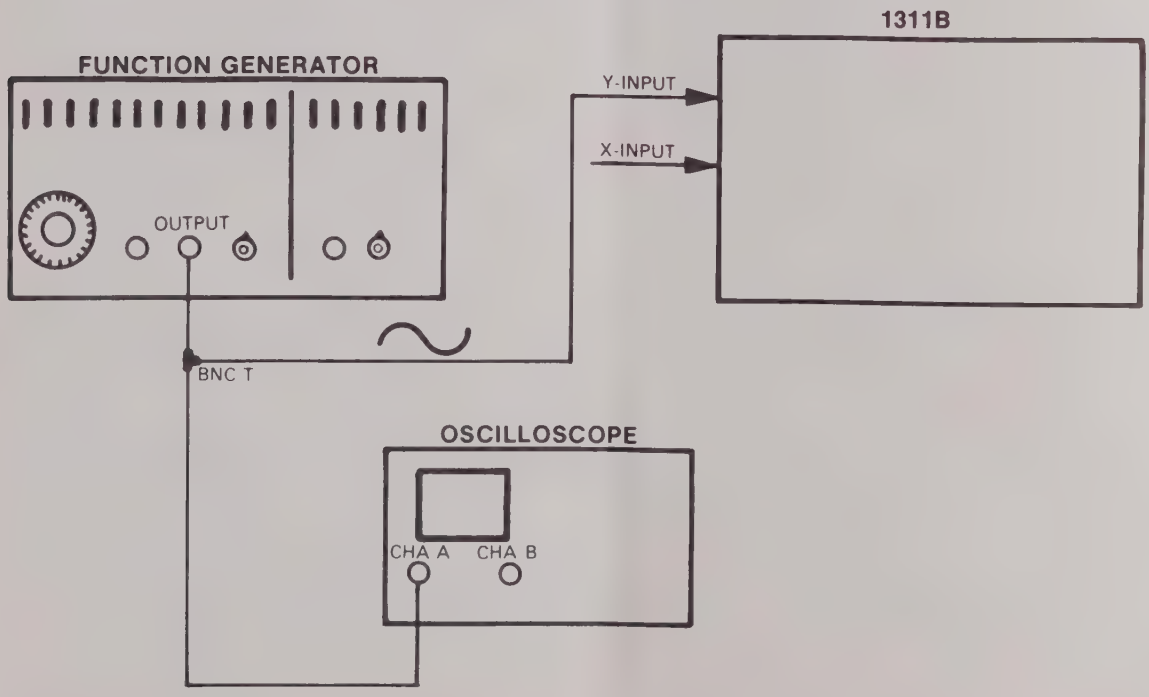

Figure 5-9. Gain-set Adjustment Test Setup

ADJUSTMENTS

5-20. X-AMPLIFIER PULSE RESPONSE AND BANDWIDTH ADJUSTMENTS.

REFERENCE:
Service Sheet 3.

DESCRIPTION:
The X-amplifier response adjustments are set for an amplifier rise time of ≤75 nanoseconds at minimum overshoot and a bandwidth of 5 mHz.

EQUIPMENT:
Pulse Generator
Monitor Oscilloscope
Function Generator

PROCEDURE:
a. Set 50Ω/10 KΩ input impedance switch (A1S1) to 50Ω.

b. Connect equipment as shown in figure 5-10.

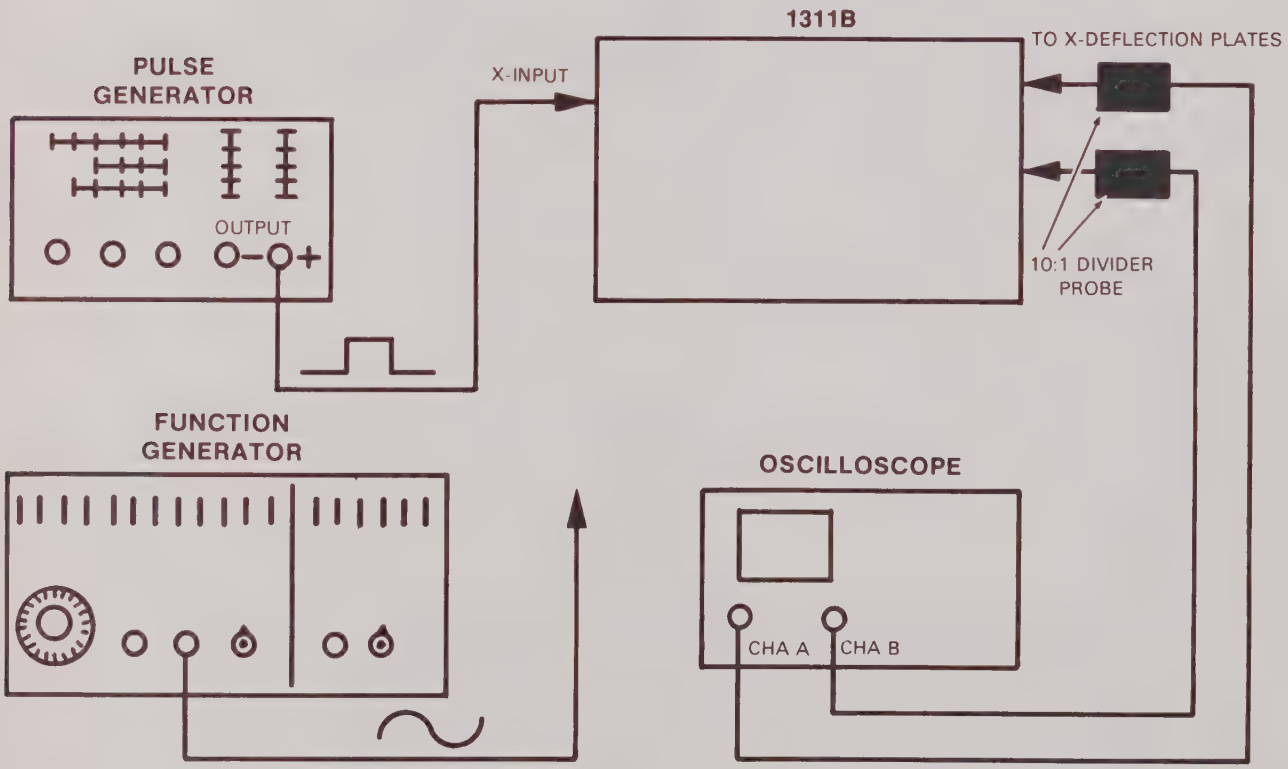

Figure 5-10. X-amplifier Pulse Response and Bandwidth Adjustment Setup

c. Set Pulse Generator controls as follows:

PULSE PERIOD ..... ≅ 10 microsecond
PULSE WIDTH ..... 50% duty cycle
AMPLITUDE ..... full screen deflection

ADJUSTMENTS

d. Connect oscilloscope to the X-deflection plates (9 and 5 wires on X-output amplifier, A2), and set oscilloscope controls as follows:

DISPLAY	A+B
TIME/DIV	10 microsecond/DIV
CHANNEL INPUT ATTENUATORS	1 V/DIV
CHANNEL B	INVERT
COUPLING	AC

e. Set LF ADJ No. 1 (A2R24) and LF ADJ No. 2 (A2C17) for flattest pulse response as indicated in figure 5-11.

f. Adjust HF ADJ No. 1 (A2C8) and HF ADJ No. 2 (A2C12) for fastest and best pulse response.

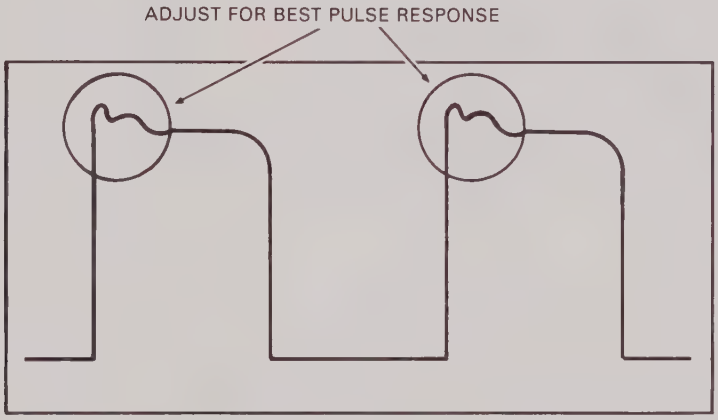

Figure 5-11. X-amplifier Pulse Response Adjustment

g. Measure rise time of the pulse between the 10% to 90% points as displayed on the oscilloscope. Rise time must be ≤75 nanoseconds.

h. Disconnect the oscilloscope probes from the deflection plate wires.

i. Disconnect Pulse Generator from X-INPUT and connect the Function Generator.

j. Apply a 50 kHz sine wave from Function Generator to the X-INPUT. Set output amplitude of Function Generator to cause 12.7 cm (5 in.) deflection on the CRT.

k. Change frequency of Function Generator to 5 MHz and verify that horizontal deflection is ≥9.4 cm (3.6 in.).

l. Repeat steps d through k until amplifier rise time and bandwidth are within specified limits.

ADJUSTMENTS

5-21. Y-AMPLIFIER PULSE RESPONSE AND BANDWIDTH ADJUSTMENTS.

REFERENCE:
Service Sheet 3.

DESCRIPTION:
The Y-amplifier response adjustments are set for an amplifier rise time of ≤75 nanoseconds at minimum overshoot and a bandwidth of 5 MHz.

EQUIPMENT:
Pulse Generator
Monitor Oscilloscope
Function Generator

PROCEDURE:
a. Set 50Ω/10 KΩ input impedance switch (A3S1) to 50Ω.

b. Connect equipment as shown in figure 5-12.

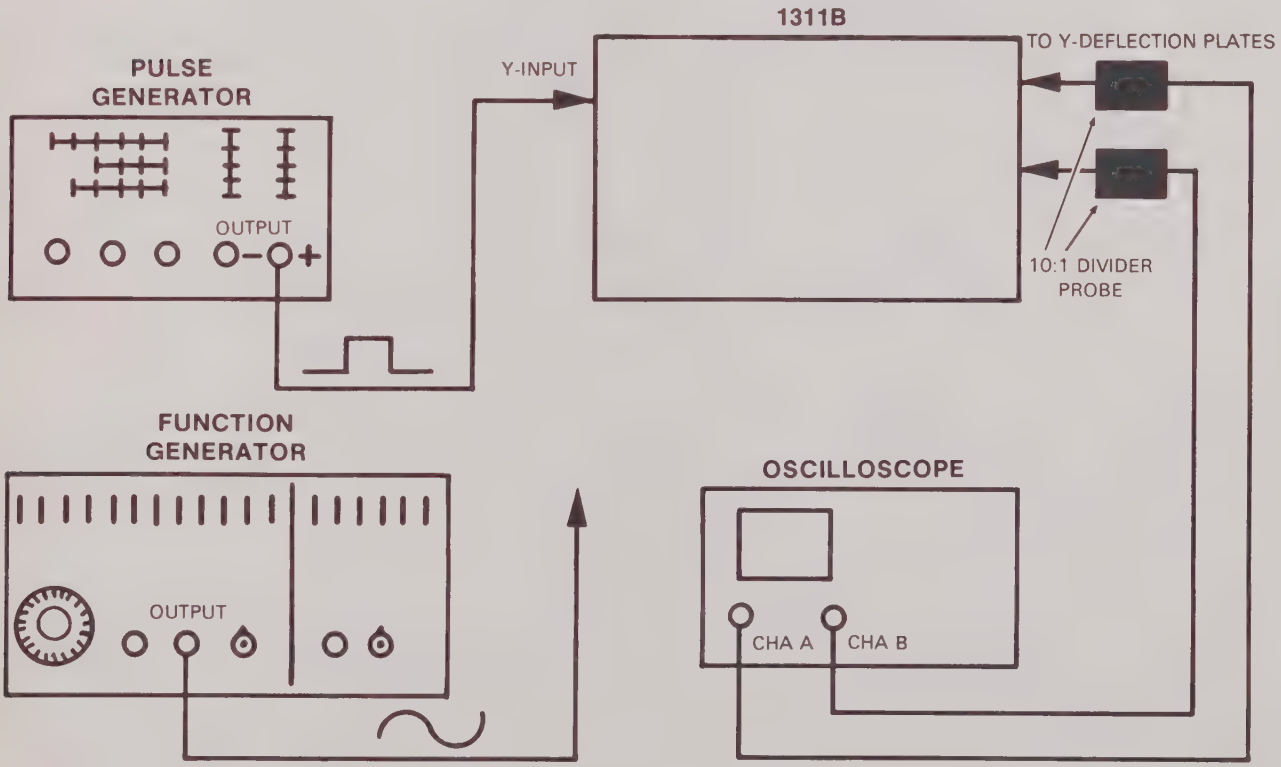

Figure 5-12. Y-amplifier Pulse Response and Bandwidth Adjustment Setup

c. Set Pulse Generator controls as follows:

PULSE PERIOD ..... ≅10 microseconds
PULSE WIDTH ..... 50% duty cycle
AMPLITUDE ..... full screen deflection

d. Connect oscilloscope to the Y-deflection plates (9 and 5 wires on Y-output amplifier, A4), and set oscilloscope controls as follows:

DISPLAY ..... A+B
TIME/DIV ..... 10 microseconds
CHANNEL INPUT ATTENUATORS ..... 1 V/DIV
CHAN B ..... invert

e. Set LF ADJ No. 1 (A4R24) and LF ADJ No. 2 (A4C17) for flattest pulse response as indicated in figure 5-13.

f. Adjust HF ADJ No. 1 (A4C8) and HF ADJ No. 2 (A4C12) for fastest and best pulse response.

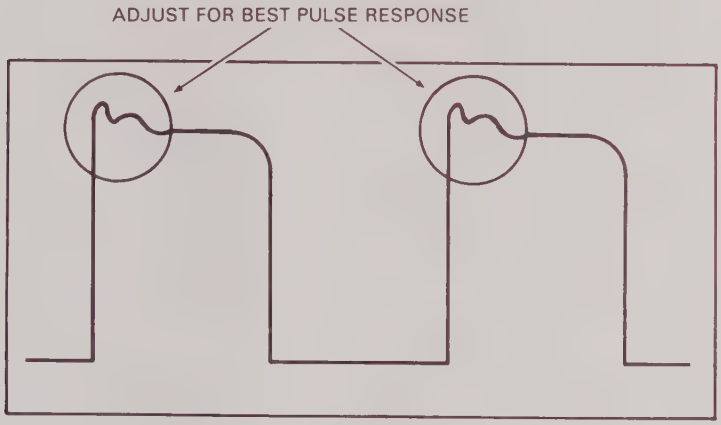

Figure 5-13. Y-amplifier Pulse Response Adjustment

g. Measure rise time of the pulse between the 10% and 90% points as displayed on the oscilloscope. Rise time must be ⩽75 nanoseconds.

h. Disconnect oscilloscope probes from deflection plate wires.

i. Disconnect Pulse Generator from Y-INPUT and connect the Function Generator.

j. Apply a 50 kHz sine wave from Function Generator to the Y-INPUT. Set output amplitude of Function Generator to cause 12.7 cm (5 in.) deflection on the CRT.

k. Change frequency of Function Generator to 5 MHz and verify that vertical deflection is ⩾9.4 cm (3.6 in.).

l. Repeat steps d through k until amplifier rise time and bandwidth are within specified limits.

ADJUSTMENTS

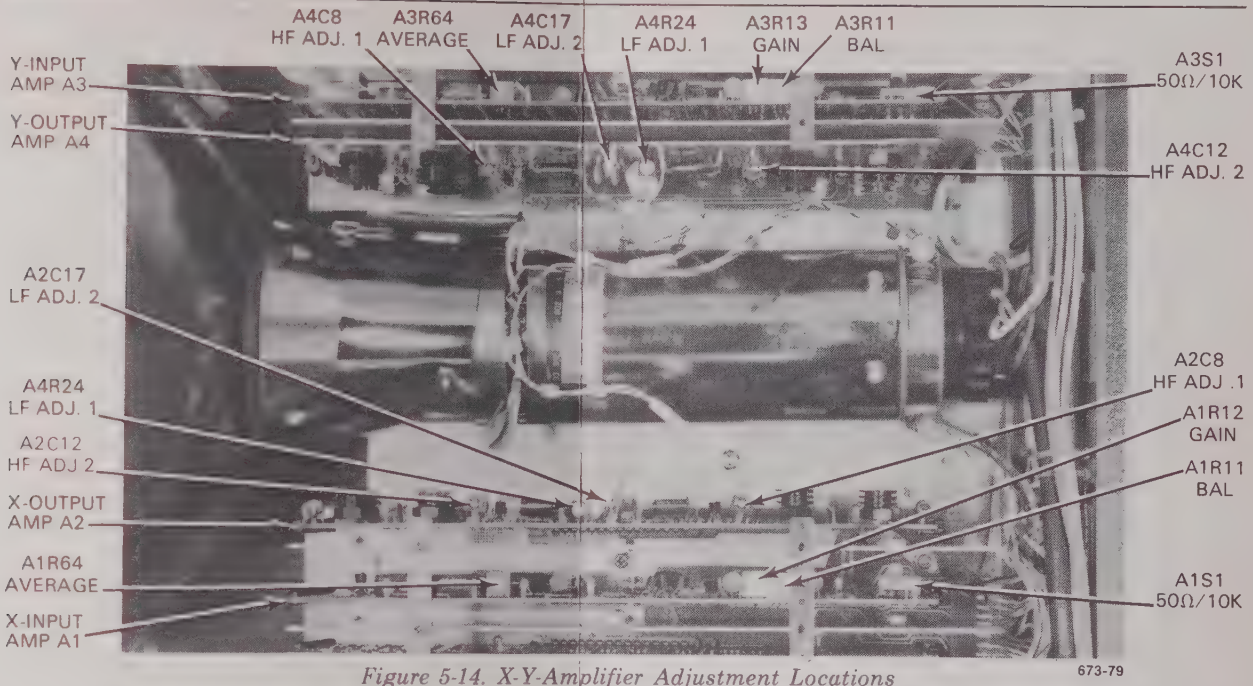

Figure 5-14. X-Y-Amplifier Adjustment Locations

Table 5-3. X- Y-Amplifier Adjustments

Reference Designator	Adjustment Name	Adjustment Paragraph	Service Sheet	Description
A1R12	X-GAIN	5-16	2	Adjust so that front panel X-GAIN provides .9 V to 1.6 V adjustment range.
A1R11	X-BALANCE	5-18	2	Adjust to minimize movement of display when X-GAIN is moved from minimum to maximum
A2R24; A2C17	LF NO. 1; LF NO. 2	5-20	3	Adjust for flattest pulse response at 75 ms
A2C28; A2C12	HF NO. 1; HF NO. 2	5-20	3	Adjust for bandwidth of 5 MHz
A3R12	Y-GAIN	5-17	2	Adjust so that front panel Y-GAIN provides .9 V to 1.6 V adjustment range.
A3R11	Y-BALANCE	5-19	2	Adjust to minimize movement of display when Y-GAIN is moved from minimum to maximum
A4C17; A4R24	LF NO. 1; LV NO. 2	5-21	3	Adjust for flattest pulse response at 75 ms
A4C28; A4C12	HF NO. 1; HF NO. 2	5-21	3	Adjust for bandwidth of 5 MHz

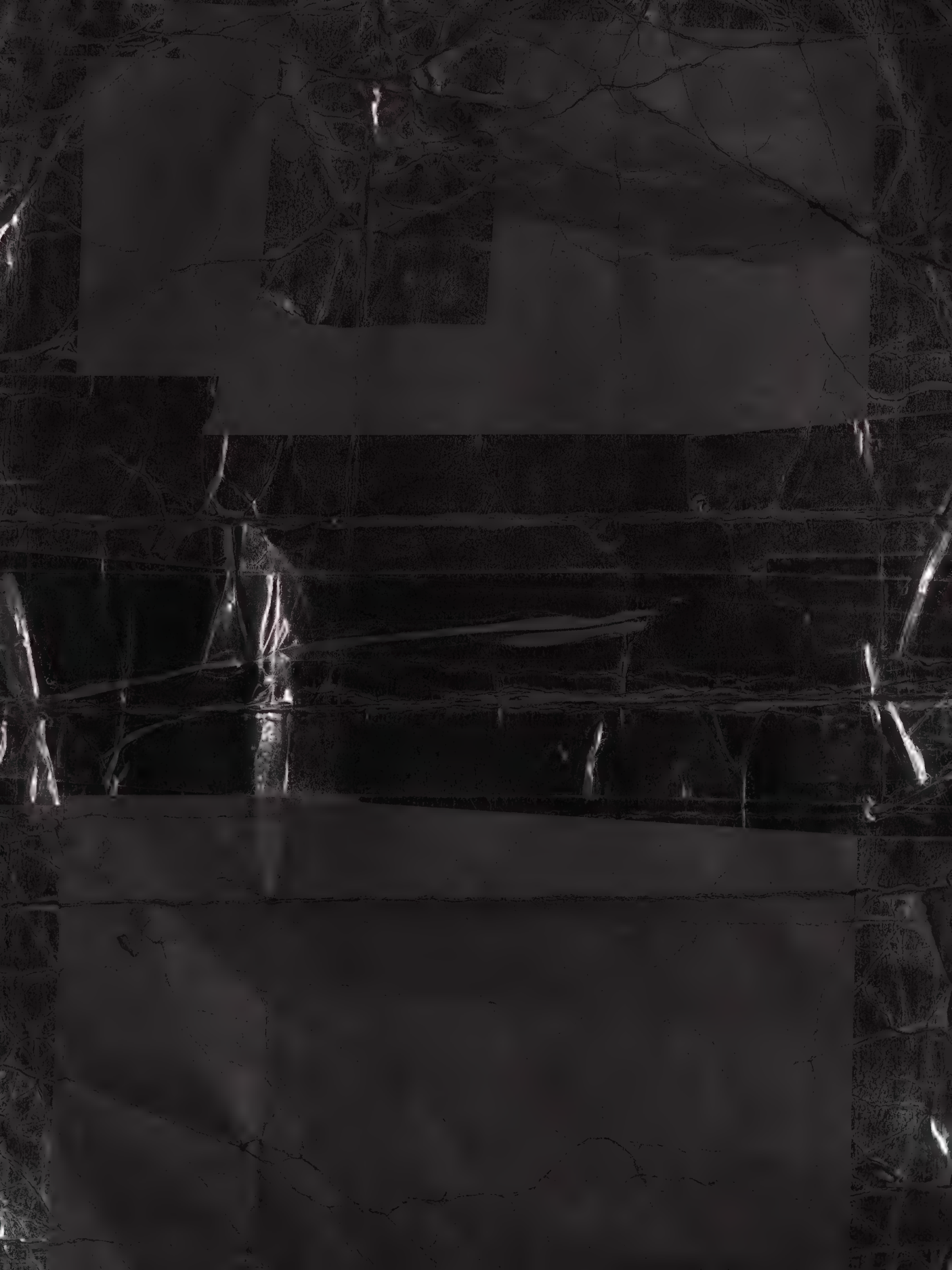

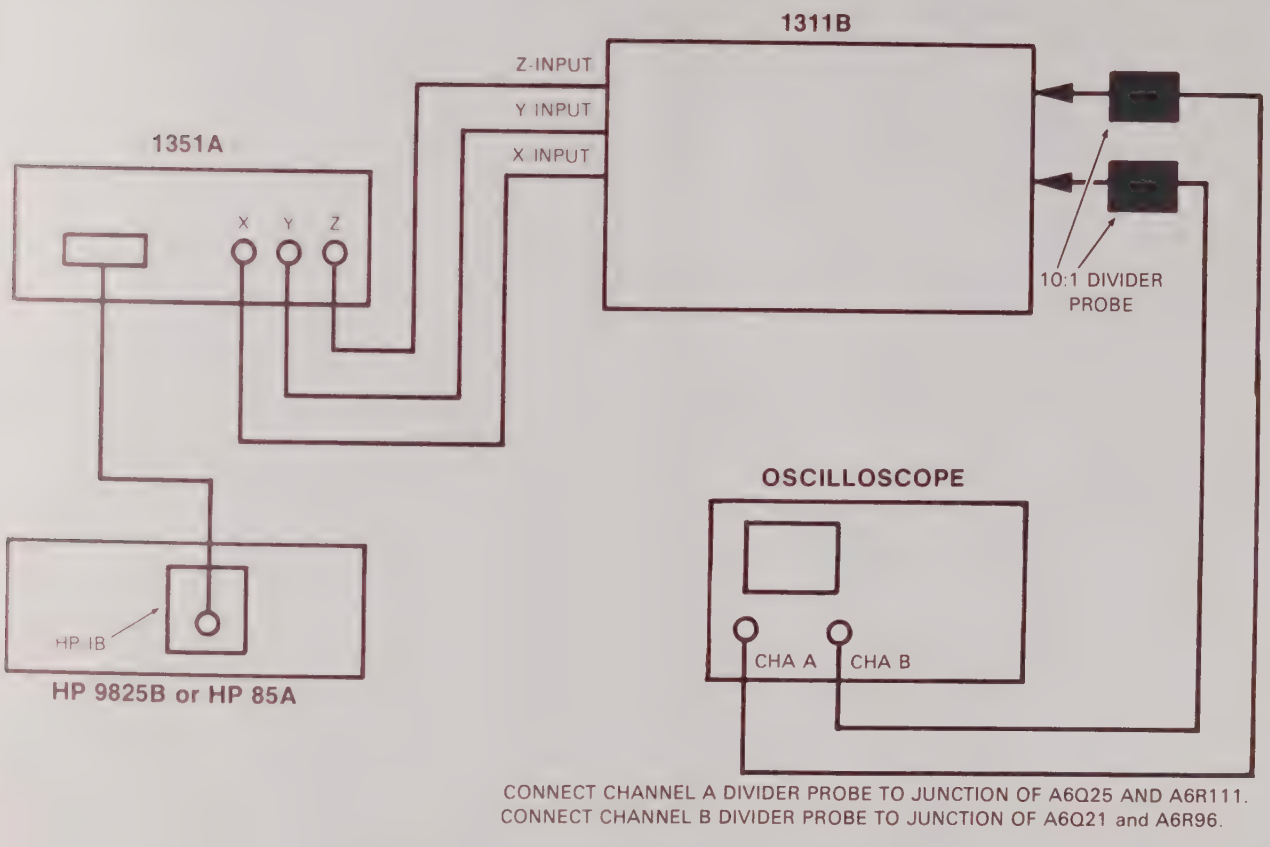

Figure 5-15. Dynamic Focus and Astigmatism Test Setup

NOTE

If Option 003 is installed, set front panel INTENSITY control for a dimly viewable spot before connecting the X-Y-Z-INPUTS. Leave INTENSITY setting for the remainder of this adjustment procedure.

b. Set X- Y- Z-amplifier input impedance switches (A1S1, A3S1, A5S1) to 50Ω.

c. Preset all adjustments on the focus and astigmatism board (A6) to center range.

d. Center the front panel FOCUS and ASTIGMATISM controls.

e. If using an HP 9825B Desktop Computer load and run the Focus and Astigmatism Test Pattern program listed in table 5-4.If using an HP 85A load and run the program listed in table 5-5.

Table 5-4. Focus and Astigmatism Test Program for HP-9825B

```
0: "FOCUS & ASTIG PROGRAM for 9825A/B/T":
1: dim A$[5],B$[5],C$[5],D$[5]
2: cli 7
3: wtb 718,3,20,13,10,"EM::EN::EX::SN::SX::UM::"
4: fmt 1,f4.0,",",f4.0,";"
5: wrt 718,"PE0,:PA0,0"
6: wrt 718,"PE1,::PA0,1020;1020,1020;1020,0;0,0;"
7: 0)X;0)Y;"FC")A$;"AC")B$;gsb "X"
8: 896)Y;gsb "X"
9: 896)X;gsb "X"
10: 0)Y;gsb "X"
11: 0)X;200)Y;"FY1")A$;"AY1")B$;gsb "X"
12: 696)Y;gsb "X"
13: 896)X;gsb "X"
14: 200)Y;gsb "X"
15: 200)X;0)Y;"")A$;"")B$;"FX1")C$;"AX1")D$;gsb "X"
16: 896)Y;gsb "X"
17: 696)X;gsb "X"
18: 0)Y;gsb "X"
19: 448)X;"")A$;"")B$;"FX2")C$;"AX2")D$;gsb "X"
20: 896)Y;gsb "X"
21: 0)X;448)Y;"FY2")A$;"AY2")B$;"")C$;"")D$;gsb "X"
22: 896)X;gsb "X"
23: 448)X;448)Y;"ZG")A$;"ZG")B$;"ZG")C$;"ZG")D$;gsb "X"
24: wrt 718.1,"PE0,::PA",X,Y
25: for I=0 to 353 by 8
26: wrt 718,"PE0,"
27: wrt 718.1,"PA",90cos(I)+511,90sin(I)+511
28: wrt 718,"PE1,"
29: wrt 718.1,"PA",90cos(I)+511,90sin(I)+511
30: next I
31: stp
32: "X":
33: wrt 718.1,"PE0,::PA",X,Y
34: wrt 718.1,"PE1,::PA",X+124,Y+124
35: wrt 718.1,"PE0,::PA",X,Y+124
36: wrt 718.1,"PE1,::PA",X+124,Y
37: wrt 718.1,"PE0,::PA",X+50,Y+5
38: wtb 718,"PE1,::CS0,::TX",A$,3,13,10
39: wrt 718.1,"PE0,::PA",X+50,Y+90
40: wtb 718,"PE1,::CS0,::TX",B$,3,13,10
41: wrt 718.1,"PE0,::PA",X+5,Y+56
42: wtb 718,"PE1,::CS0,::TX",C$,3,13,10
43: wrt 718.1,"PE0,::PA",X+90,Y+56
44: wtb 718,"PE1,::CS0,::TX",D$,3,13,10
45: ret
*4894
```

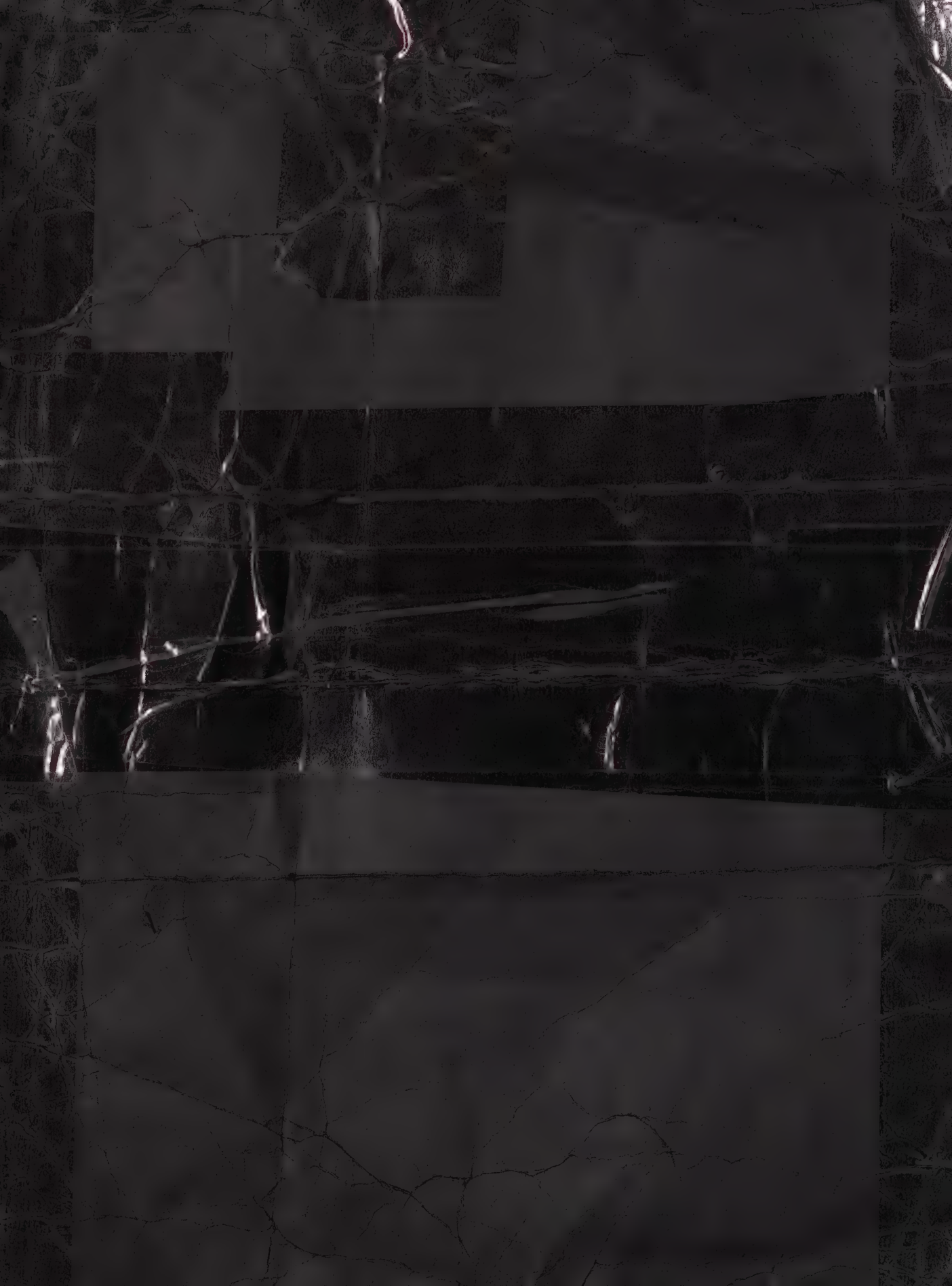

5-22. TRACE-ALIGN AND ORTHO ADJUSTMENT.

REFERENCE:
Service Sheet 7.

DESCRIPTION:
The trace is electrically aligned horizontally and vertically with the sides of the 1311B.

EQUIPMENT:
Function Generator

PROCEDURE:
a. Apply a 1 V p-p, 1 kHz sine wave from Function Generator to the X-INPUT.

b. Set TRACE ALIGN to cause trace to lie parallel to the top or bottom of the cabinet.

c. Disconnect Function Generator from X-INPUT and connect to Y-INPUT.

d. Set ORTHOG to cause the trace to lie parallel to the cabinet sides.

5-23. DYNAMIC FOCUS AND ASTIGMATISM ADJUSTMENT.

REFERENCE:
Service Sheets 5 and 6.

DESCRIPTION:
The following procedure describes the dynamic focus and astigmatism adjustments using the HP Model 1351A Graphics Generator and the HP Model 9825A, HP-IB Controller.

EQUIPMENT:
HP 9825B or HP 85A Desktop Computer
98214 Extended I/O ROM
1351A Graphics Generator
Monitor Oscilloscope.

PROCEDURE:
a. Set up test equipment as shown in figure 5-15.

Table 5-5. Focus and Astigmatism Test Program for HP 85A

```
1 DEG @ FXD 0
2 DIM A$[5],B$[5],C$[5],D$[5]
3 RESET 7
4 OUTPUT 718 ;"EM::EN::EX::SN::UM::"
5 IMAGE 8A,4D,",",4D,";::"
6 IMAGE #,14A
7 OUTPUT 718 ;"PE0,::PA0,0;:"
8 OUTPUT 718 ;"CS0,::PE1,::PA0,1020;1020,1020;1020,0;0,0;::"
9 X=0 @ Y=0 @ A$="FC" @ B$="AC" @ C$="" @ D$="" @ GOSUB 35
10 Y=896 @ GOSUB 35
11 X=896 @ GOSUB 35
12 Y=0 @ GOSUB 35
13 X=0 @ Y=200 @ A$="FY1" @ B$="AY1" @ GOSUB 35
14 Y=696 @ GOSUB 35
15 X=896 @ GOSUB 35
16 Y=200 @ GOSUB 35
17 X=200 @ Y=0 @ A$="" @ B$="" @ C$="FX1" @ D$="AX1" @ GOSUB 35
18 Y=896 @ GOSUB 35
19 X=696 @ GOSUB 35
20 Y=0 @ GOSUB 35
21 X=448 @ A$="" @ B$="" @ C$="FX2" @ D$="AX2" @ GOSUB 35
22 Y=896 @ GOSUB 35
23 X=0 @ Y=448 @ A$="FY2" @ B$="AY2" @ C$="" @ D$="" @ GOSUB 35
24 X=896 @ GOSUB 35
25 X=448 @ Y=448 @ A$="ZG" @ B$="ZG" @ C$="ZG" @ D$="ZG" @ GOSUB 35
26 OUTPUT 718 USING 5 ; "PE0,::PA",X,Y
27 FOR I=0 TO 348 STEP 12
28 P=90*COS(I-135)+X+63 @ Q=90*SIN(I-135)+Y+63
29 OUTPUT 718 USING 5 ; "PE0,::PA",P,Q
30 FOR J=1 TO 2
31 OUTPUT 718 USING 5 ; "PE1,::PA",P,Q
32 NEXT J
33 NEXT I
34 STOP
35 OUTPUT 718 USING 5 ; "PE0,::PA",X,Y
36 OUTPUT 718 USING 5 ; "PE1,::PA",X+124,Y+124
37 OUTPUT 718 USING 5 ; "PE0,::PA",X,Y+124
38 OUTPUT 718 USING 5 ; "PE1,::PA",X+124,Y
39 OUTPUT 718 USING 5 ; "PE0,::PA",X+50,Y+5
40 OUTPUT 718 USING 6 ; "PE1,::CS0,::TX"
41 OUTPUT 718 ;A$,CHR$(3)
42 OUTPUT 718 USING 5 ; "PE0,::PA",X+50,Y+90
43 OUTPUT 718 USING 6 ; "PE1,::CS0,::TX"
44 OUTPUT 718 ;B$,CHR$(3)
45 OUTPUT 718 USING 5 ; "PE0,::PA",X+5,Y+56
46 OUTPUT 718 USING 6 ; "PE1,::CS0,::TX"
47 OUTPUT 718 ;C$,CHR$(3)
48 OUTPUT 718 USING 5 ; "PE0,::PA",X+90,Y+56
49 OUTPUT 718 USING 6 ; "PE1,::CS0,::TX"
50 OUTPUT 718 ;D$,CHR$(3)
51 RETURN
52 END
```

f. Adjust front panel X-Y GAIN and X-Y POSTION controls so that the pattern on screen fills the viewing area. Set front panel INTENSITY fully clockwise (except Option 003). Check figure 5-16 for correct pattern.

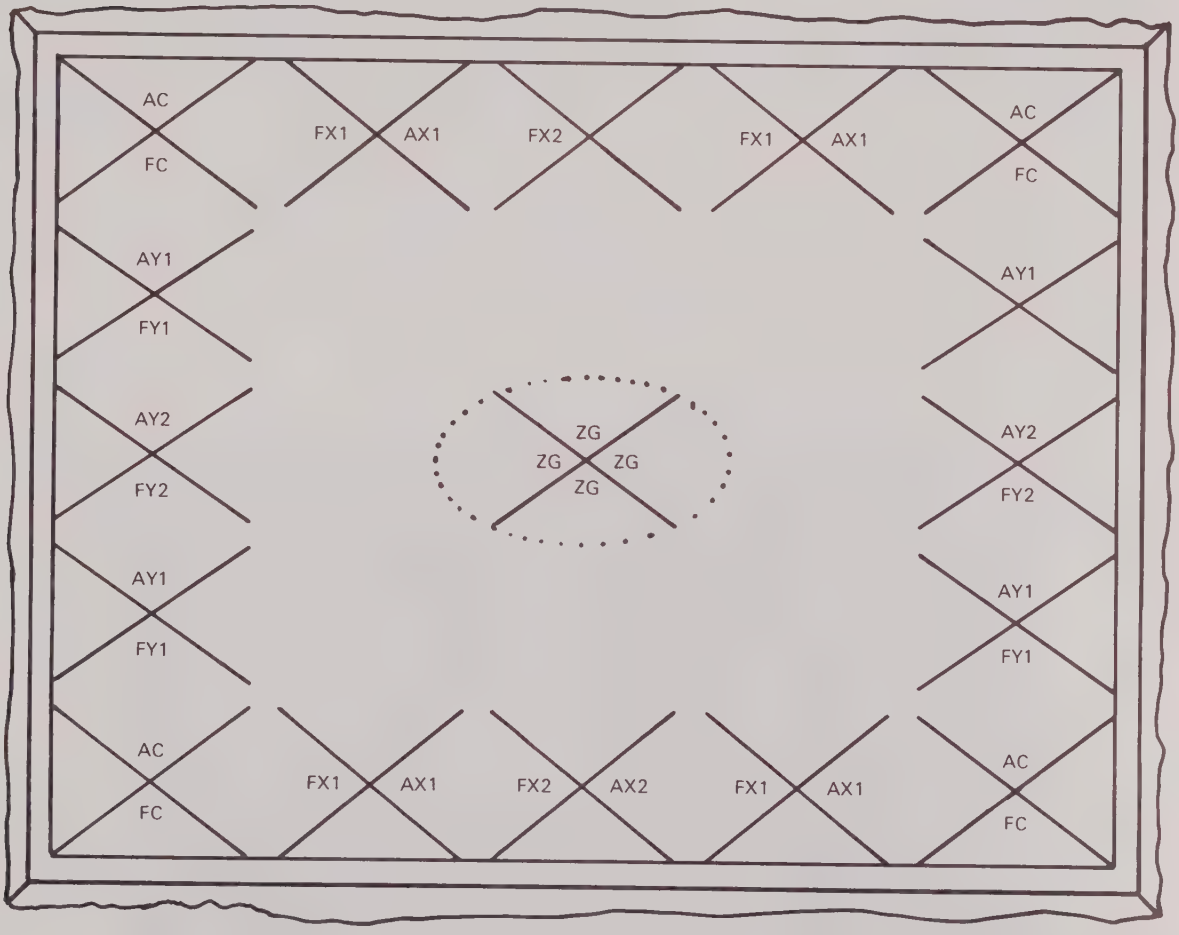

Figure 5-16. Focus and Astigmatism Test Pattern

g. Adjust Astigmatism Balance (A6R90) and Focus Limit (A9R30) for sharpest "X" crossings at the corners of the display.

h. Monitor the focus output (junction of A6Q25 and A6R102) and the astigmatism output (junction of A6Q21 collector and A6R96) with the monitor oscilloscope for the remainder of the adjustment procedure.

i. Set oscilloscope controls as follows and obtain the display as shown in figure 5-17:

DISPLAY ..... ALT
TIME/DIV ..... 2 milliseconds
CHANNEL INPUT ATTENUATORS ..... 50 V/DIV

ADJUSTMENTS

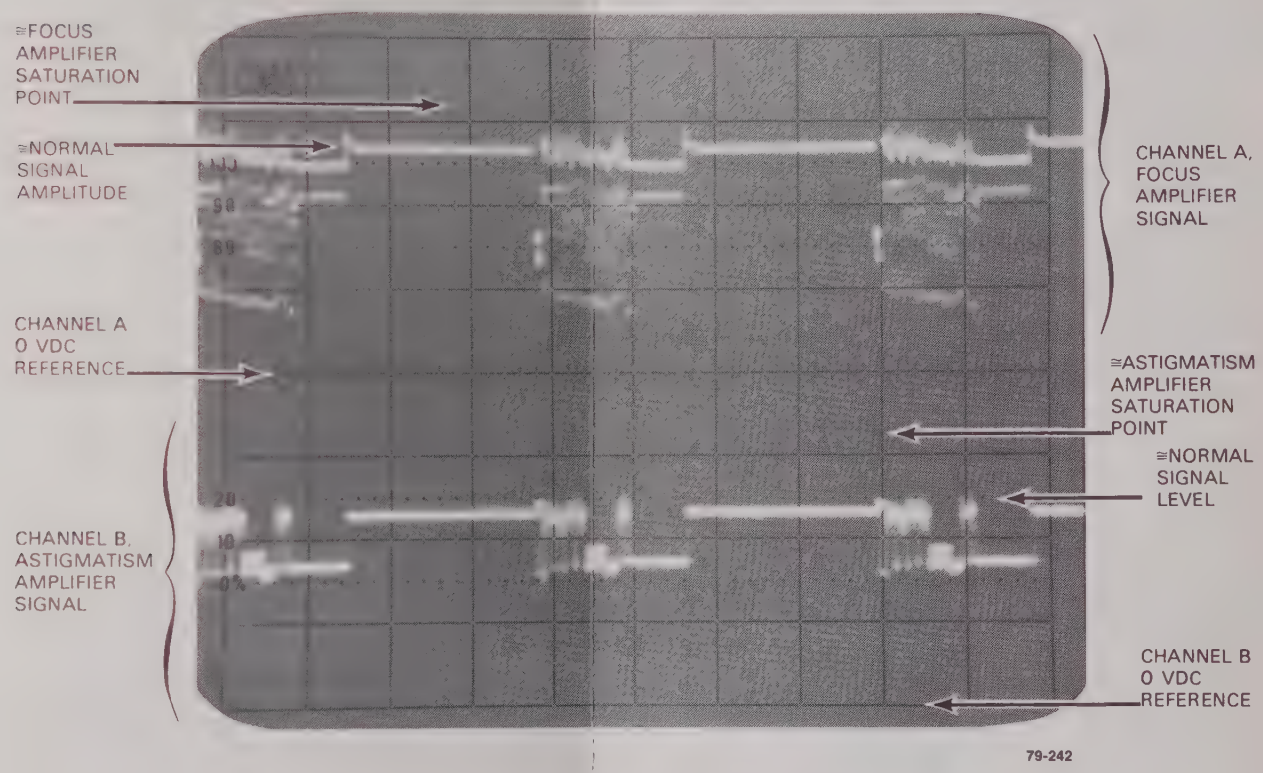

Figure 5-17. Focus and Astigmatism Output Waveforms

j. After each of the following adjustments (steps l through p) check the signal levels displayed on the oscilloscope. If either signal reaches 0 V or +165 V (amplifier saturation), readjust Focus Balance (A6R44) and/or Astigmatism Balance (A6R90) until each signal is between 0 V and +165 V.

k. Adjust FX2 and AX2 for sharpest "X" crossing at positions indicated on screen.

l. Adjust FX1 and AX1 for sharpest "X" crossing at positions indicated on screen.

m. Adjust FY2 and AY2 for sharpest "X" crossing at positions indicated on screen.

n. Adjust FY1 and AY1 for sharpest "X" crossing at positions indicated on screen.

o. All "X" crossings on screen, including the center, should now appear sharply focused. Repeat steps c through o if display is not focused.

p. Adjust Focus Gain (A6R43) for best focused dotted figure at center screen.

q. All elements of the displayed pattern, including alphanumerics, should now be sharply focused. If not, repeat procedure from step l on.

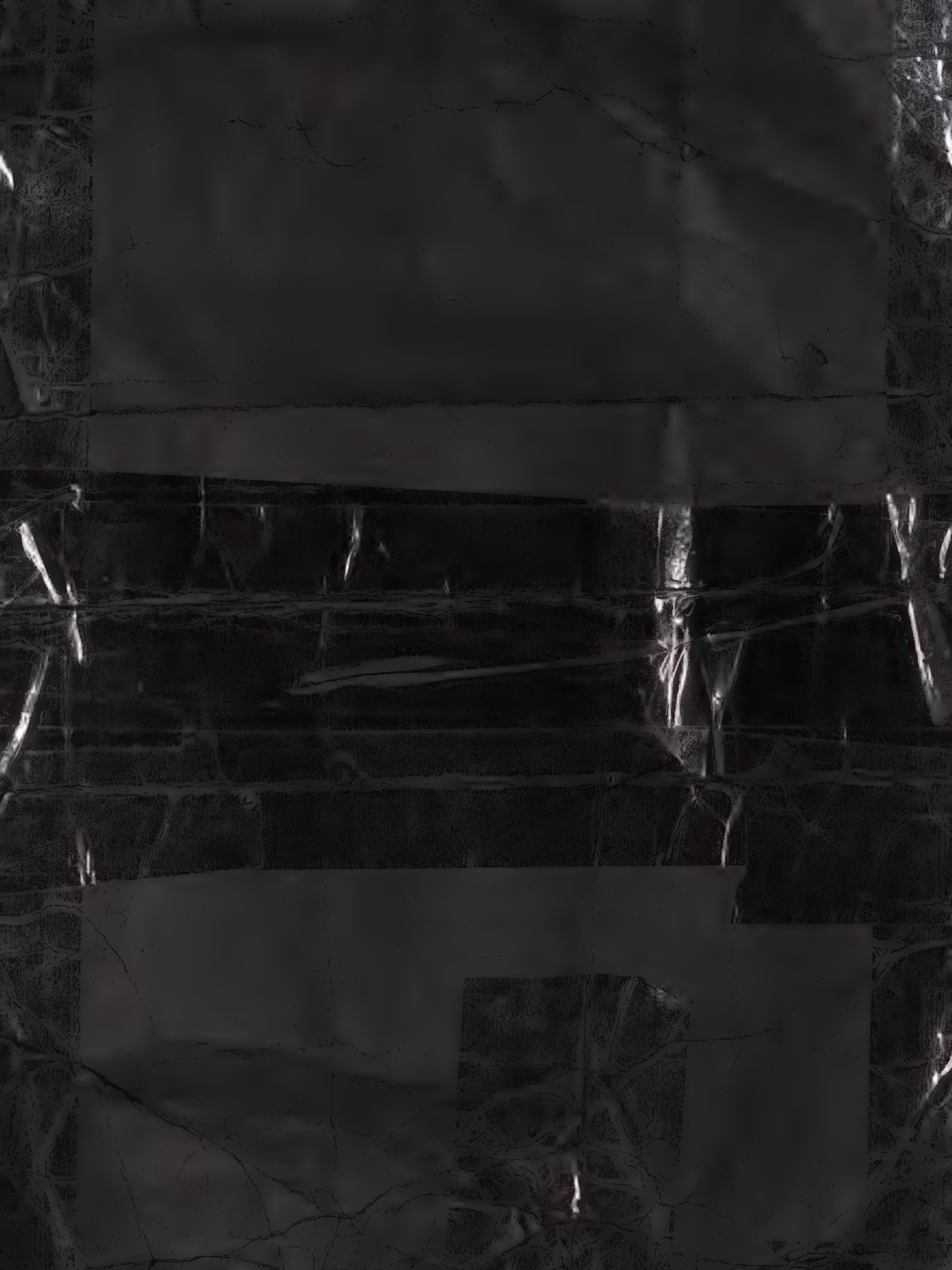

b. Set Pulse Generator No. 1 controls as follows:

PULSE PERIOD	.2 milliseconds
PULSE WIDTH	50% duty cycle
AMPLITUDE	1 V p-p

c. Set Pulse Generator No. 2 controls as follows:

PULSE PERIOD	EXT. TRIGGER
PULSE WIDTH	10 microseconds
AMPLITUDE	1 V p-p

d. Set oscilloscope controls as follows and obtain the display as shown in figure 5-19.

DISPLAY	ALT
TIME/DIV	50 microseconds
CHANNEL INPUT ATTENUATORS	50 V/DIV

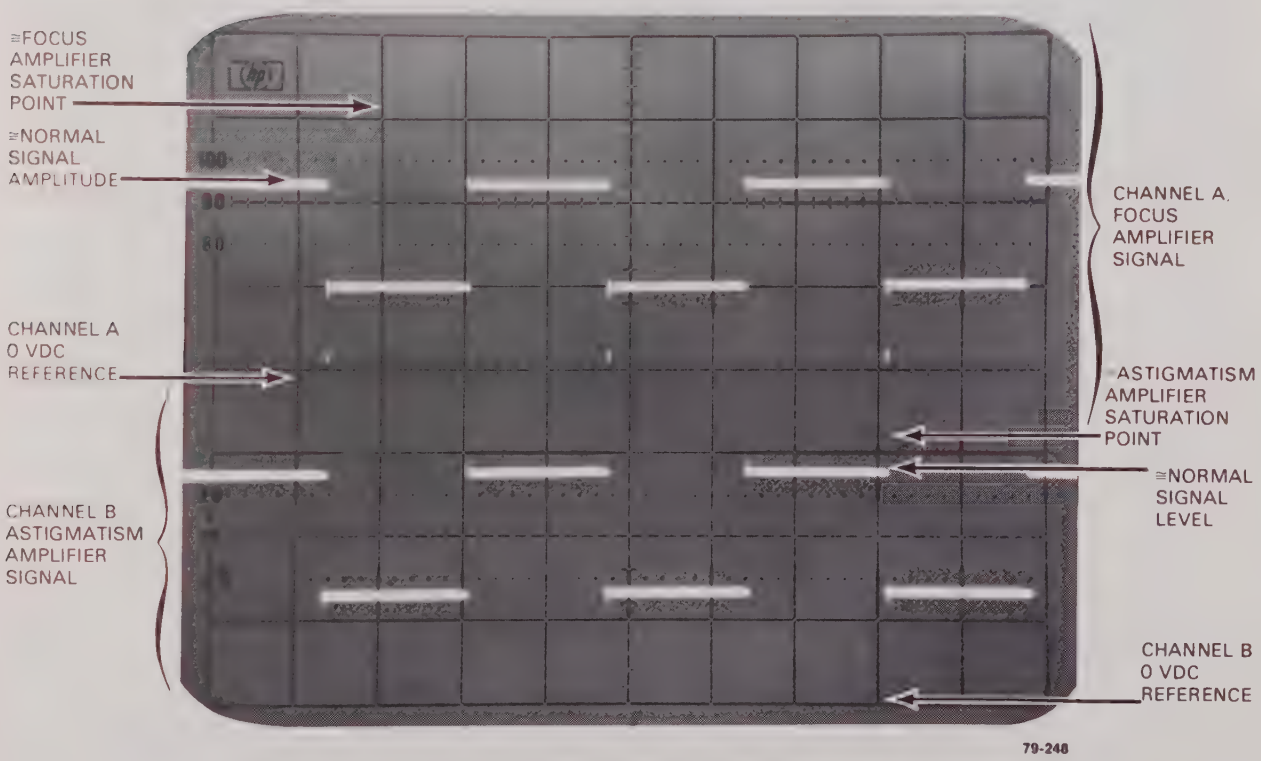

Figure 5-19. Focus and Astigmatism Waveforms

e. Set all adjustments on the focus and astigmatism assembly (A6) to center. Adjust front panel FOCUS and ASTIGMATISM to center.

f. Disconnect Pulse Generator No. 1 and position beam to location No. 1 on screen (see figure 5-20).

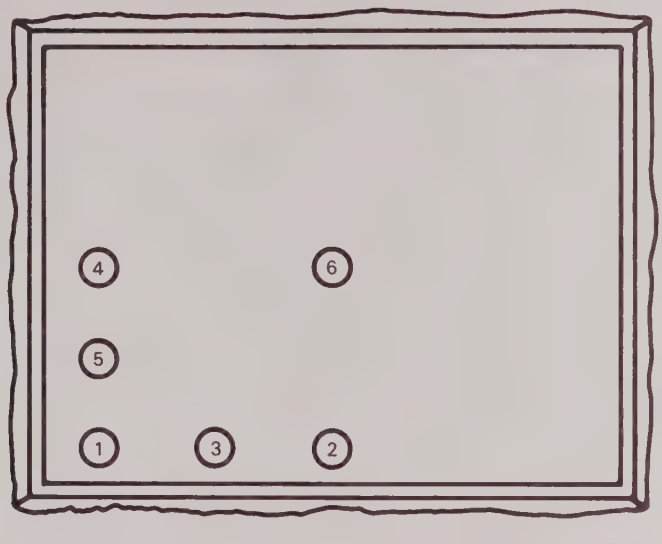

Figure 5-20. Beam Locations for Focus and Astigmatism Procedure

g. Adjust Focus Limit (A9R30) and Astigmatism Balance (A6R90) for best focused dot at location No. 1.

h. Connect Pulse Generator No. 1 to the X-INPUT and adjust amplitude to move beam to location No. 2.

i. After each of the following adjustments (steps j through n) check the signal levels displayed on the oscilloscope. If either signal reaches 0 V or +165 V (amplifier saturation), readjust Focus Balance A6R44) and/or Astigmatism Balance (A6R90) until each signal is between 0 V and +165 V.

j. Adjust FX2 and AX2 for best focused dot at location No. 2.

k. Adjust Pulse Generator No. 1 amplitude to move beam to location No. 3. Adjust FX1 and AX1 for best focused dot at location No. 3.

l. Disconnect Pulse Generator No. 1 from X-INPUT and check focus at location No. 1. If beam is not focused repeat this adjustment procedure from step g on.

m. Connect Pulse Generator No. 1 to the Y-INPUT and adjust amplitude to move beam to location No. 4. Adjust FY2 and AY2 for best focused dot at location No. 4.

n. Adjust Pulse Generator No. 1 amplitude to move beam to location No. 5 and adjust FY1 and AY1 for best focused dot at location No. 5.

o. Disconnect Pulse Generator No. 1 and check focus at location No. 1. If beam appears defocused, repeat this procedure from step g on.

p. Connect Pulse Generator No. 1 to both X- and Y-INPUT and adjust amplitude to move beam to location No. 6. (It may be necessary to readjust X- or Y-GAIN to move beam to location No. 6.)

q. Beam should appear well focused. If not, repeat this procedure starting with step g.

r. Reduce amplitude of Pulse Generator No. 2 and adjust front panel INTENSITY for a dimly viewable beam at location No. 6. Adjust Focus Gain (A6R43) for best focused spot.

s. Recheck beam focus at all locations. Should adjustment be necessary, repeat this procedure starting with step g.

t. After completion of adjustments set input impedance switches (A1S1; A3S1; A5S1) to desired positions.

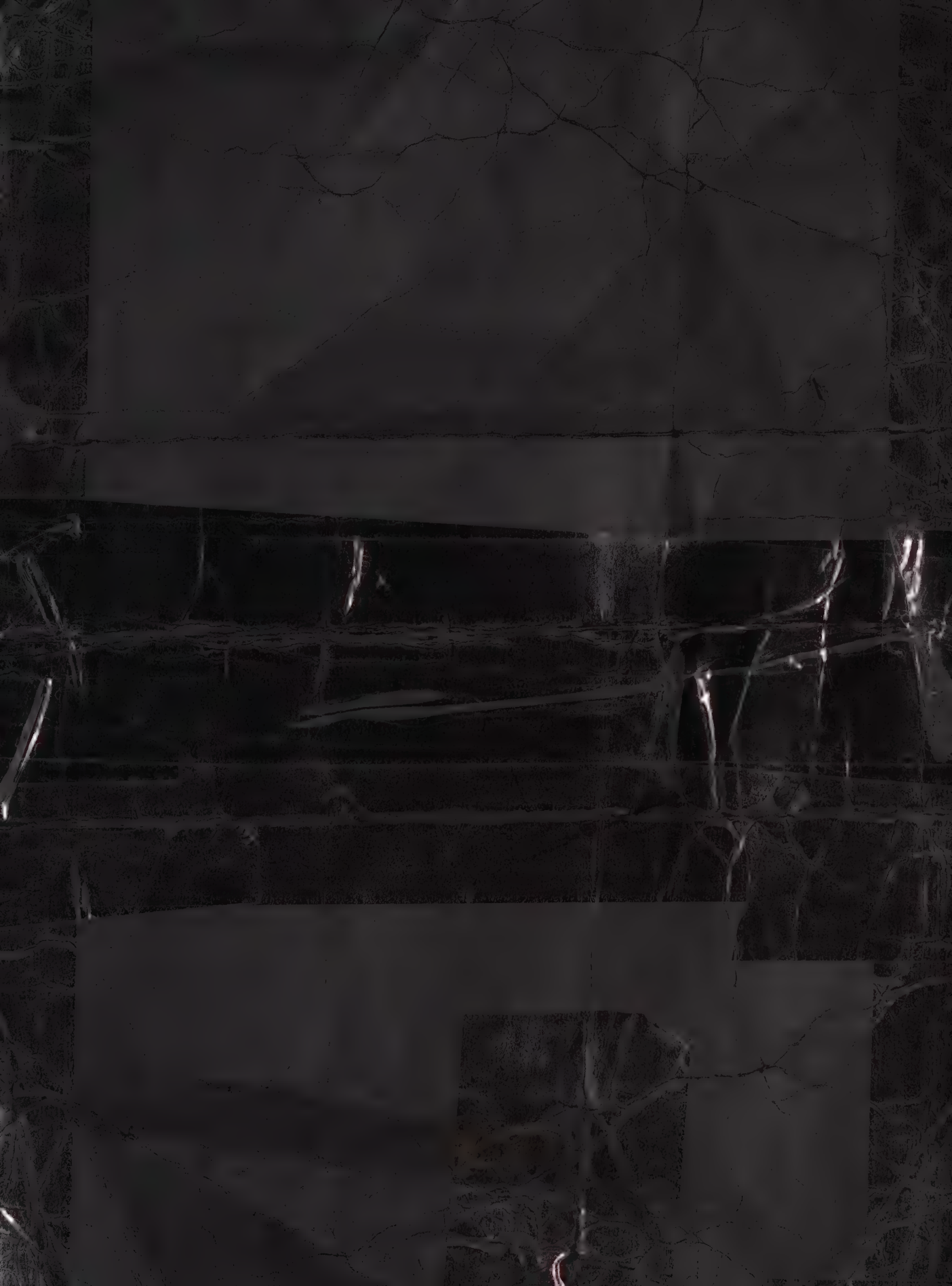

5-24. DYNAMIC FOCUS AND ASTIGMATISM ADJUSTMENT (Alternate Procedure).

REFERENCE:
Service Sheets 5 and 6.

DESCRIPTION:
The following procedure describes the dynamic focus and astigmatism adjustment when the 1351A Graphics Generator and the 9825B HP-IB Controller are not available.

EQUIPMENT:
Pulse Generators (2)
Monitor Oscilloscope

PROCEDURE:
a. Connect equipment as shown in figure 5-18.

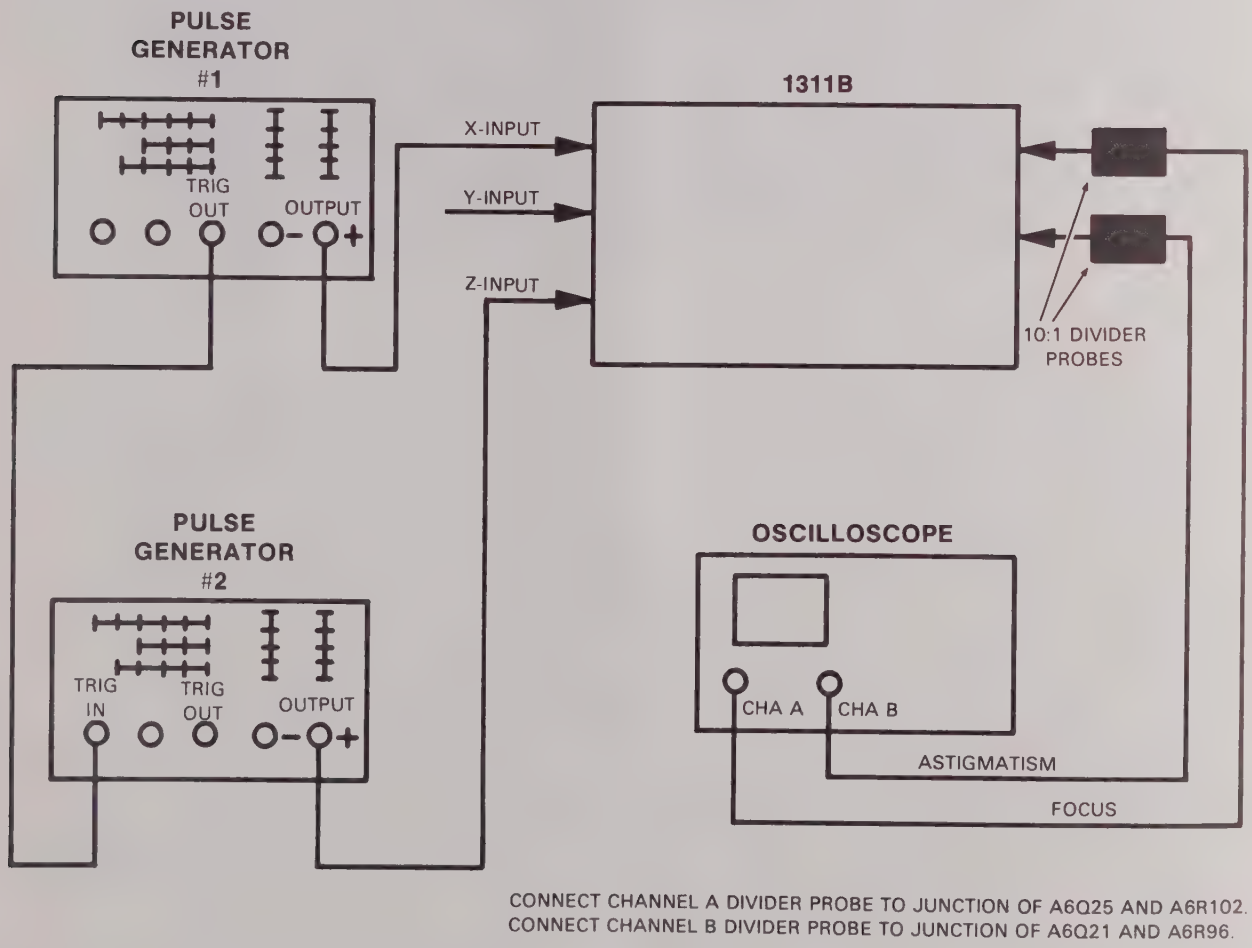

Figure 5-18. Dynamic Focus and Astigmatism Test Setup

ADJUSTMENTS

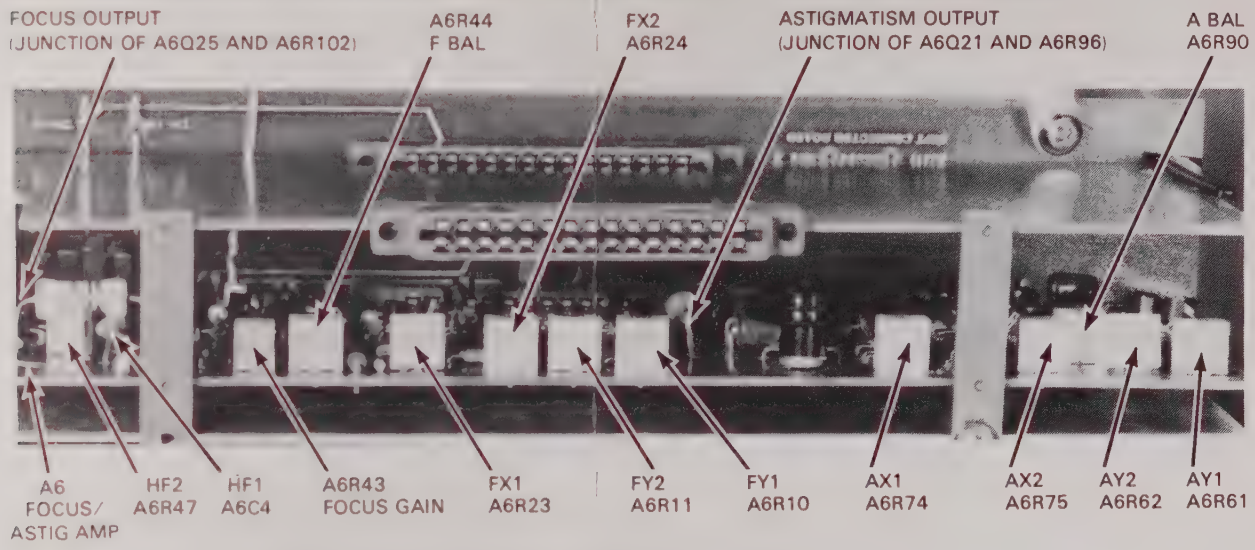

Figure 5-21. Focus and Astigmatism Adjustment Locations

79-676

Table 5-6. Focus and Astigmatism Adjustments

Reference Designator	Adjustment Name	Adjustment Paragraph	Service Sheet	Description
Front Panel Adjustment				
A13R8	TRACE ALIGN	5-22	7	Adjust trace to lie along X-AXIS of CRT
A13R9	ORTHOG	5-22	7	Adjust trace to lie along Y-AXIS of CRT
A9R30	FOCUS LIMIT	5-23; 5-24	7	Adjust for best focus in the corners of the display
A6R90	ASTIGMATISM BALANCE	5-23; 5-24	6	Adjust to keep astigmatism output signal between a signal level of 0 V to +165 V
A6R44	FOCUS BALANCE	5-23; 5-24	5	Adjust to keep focus output signal between a signal level of 0 V to +165 V
A6R24; A6R75	FX2; AX2	5-23; 5-24	5; 6	Adjust for best focused dot at location No. 2 (see figure 5-11 for location)
A6R23; A6R71	FX1; AX1	5-23; 5-24	5; 6	Adjust for best focused dot at location No. 3 (see figure 5-11)
A6R11; A6R62	FY2; AY2	5-23; 5-24	5; 6	Adjust for best focused dot at location No. 4 (see figure 5-11)
A6R10; A6R61	FY1; AY1	5-23; 5-24	5; 6	Adjust for best focused dot at location No. 5 (see figure 5-11)
A6R43	FOCUS GAIN	5-23; 5-24	5	Adjust for best focused dot at location No. 6 (see figure 5-11)

SECTION VI

REPLACEABLE PARTS

6-1. INTRODUCTION.

6-2. This section contains information for ordering parts. Table 6-1 lists abbreviations used in the parts list. Table 6-2 lists all replaceable parts in reference designator order. Table 6-3 contains the names and addresses that correspond to the manufacturer's code numbers. Figure 6-1 shows the illustrated parts breakdown.

6-3. ABBREVIATIONS.

6-4. Table 6-1 lists abbreviations used in the parts list, the schematics, and throughout the manual. In some cases, two forms of the abbreviations are used: one in all capital letters and one partial or no capitals. This occurs because the abbreviations in the parts list are always in capitals. However, in other parts of the manual other abbreviation forms are used with both lowercase and uppercase letters.

6-5. REPLACEABLE PARTS LIST.

6-6. Table 6-2 is the list of replaceable parts and is organized as follows:

a. Electrical assemblies in alphanumerical order by reference designation.

b. Chassis-mounted parts in alphanumerical order by reference designation.

c. Electrical assemblies and their components in alphanumerical order by reference designation.

d. Standard options in numerical order.

The information given for each part consists of the following:

a. Reference designation.

b. Hewlett-Packard part number.

c. Part number Check Digit (CD).

d. Total quantity (Qty) in instrument (or on assembly).

e. Description of part.

f. Typical manufacturer of part in an identifying five-digit code.

g. Manufacturer's number for the part.

The total quantity for each part is given only once — at the first appearance of the part number in the list.

6-7. ORDERING INFORMATION.

6-8. To order a part listed in the material lists, quote the Hewlett-Packard part number, indicate the quantity desired, and address the order to the nearest Hewlett-Packard Sales/Service Office.

6-9. To order a part that is not listed in the material lists, include the instrument model number, instrument serial number, a description of the part (including its function), and the number of parts required. Address the order to the nearest Hewlett-Packard Sales/Service Office.

6-10. DIRECT MAIL ORDER SYSTEM.

6-11. Within the USA, Hewlett-Packard can supply parts through a direct mail order system. Advantages of using this system are:

a. Direct ordering and shipment from the HP Parts Center in Mountain View, California.

b. No maximum or minimum on any mail order (there is a minimum order amount for parts ordered through a local HP office when the orders require billing and invoicing).

c. Prepaid transportation (there is a small handling charge for each order).

d. No invoices.

To provide these advantages, a check or money order must accompany each order.

6-12. Mail order forms and specific ordering information is available through your local HP office. Addresses and phone numbers are located at the back of this manual.

Table 6-1. Reference Designators and Abbreviations

REFERENCE DESIGNATORS

A	assembly	F	fuse	MP	mechanical part	U	integrated circuit
B	motor	FL	filter	P	plug	V	vacuum, tube, neon bulb, photocell, etc
BT	battery	IC	integrated circuit	Q	transistor		
C	capacitor	J	jack	R	resistor	VR	voltage regulator
CP	coupler	K	relay	RT	thermistor	W	cable
CR	diode	L	inductor	S	switch	X	socket
DL	delay line	LS	loud speaker	T	transformer	Y	crystal
DS	device signaling (lamp)	M	meter	TB	terminal board	Z	tuned cavity network
E	misc electronic part	MK	microphone	TP	test point		

ABBREVIATIONS

A	amperes	H	henries	N/O	normally open	RMO	rack mount only
AFC	automatic frequency control	HDW	hardware	NOM	nominal	RMS	root-mean square
AMPL	amplifier	HEX	hexagonal	NPO	negative positive zero (zero temperature coefficient)	RWV	reverse working voltage
		HG	mercury				
BFO	beat frequency oscillator	HR	hour(s)				
BE CU	beryllium copper	HZ	hertz	NPN	negative-positive-negative	S-B	slow-blow
BH	binder head					SCR	screw
BP	bandpass			NRFR	not recommended for field replacement	SE	selenium
BRS	brass	IF	intermediate freq			SECT	section(s)
BWO	backward wave oscillator	IMPG	impregnated	NSR	not separately replaceable	SEMICON	semiconductor
		INCD	incandescent			SI	silicon
CCW	counter-clockwise	INCL	include(s)			SIL	silver
CER	ceramic	INS	insulation(ed)	OBD	order by description	SL	slide
CMO	cabinet mount only	INT	internal	OH	oval head	SPG	spring
COEF	coeficient			OX	oxide	SPL	special
COM	common	K	kilo=1000			SST	stainless steel
COMP	composition					SR	split ring
COMPL	complete	LH	left hand	P	peak	STL	steel
CONN	connector	LIN	linear taper	PC	printed circuit		
CP	cadmium plate	LK WASH	lock washer	PF	picofarads=10^{-12} farads	TA	tantalum
CRT	cathode-ray tube	LOG	logarithmic taper			TD	time delay
CW	clockwise	LPF	low pass filter	PH BRZ	phosphor bronze	TGL	toggle
				PHL	phillips	THD	thread
DEPC	deposited carbon	M	milli=10^{-3}	PIV	peak inverse voltage	TI	titanium
DR	drive	MEG	meg=10^{6}	PNP	positive-negative-positive	TOL	tolerance
		MET FLM	metal film			TRIM	trimmer
ELECT	electrolytic	MET OX	metallic oxide	P/O	part of	TWT	traveling wave tube
ENCAP	encapsulated	MFR	manufacturer	POLY	polystyrene		
EXT	external	MHZ	mega hertz	PORC	porcelain	U	micro=10^{-6}
		MINAT	miniature	POS	position(s)		
F	farads	MOM	momentary	POT	potentiometer	VAR	variable
FH	flat head	MOS	metal oxide substrate	PP	peak-to-peak	VDCW	dc working volts
FIL H	fillister head	MTG	mounting	PT	point		
FXD	fixed	MY	"mylar"	PWV	peak working voltage	W/	with
						W	watts
G	giga (10^{9})	N	nano (10^{-9})	RECT	rectifier	WIV	working inverse voltage
GE	germanium	N/C	normally closed	RF	radio frequency		
GL	glass	NE	neon	RH	round head or right hand	WW	wirewound
GRD	ground(ed)	NI PL	nickel plate			W/O	without

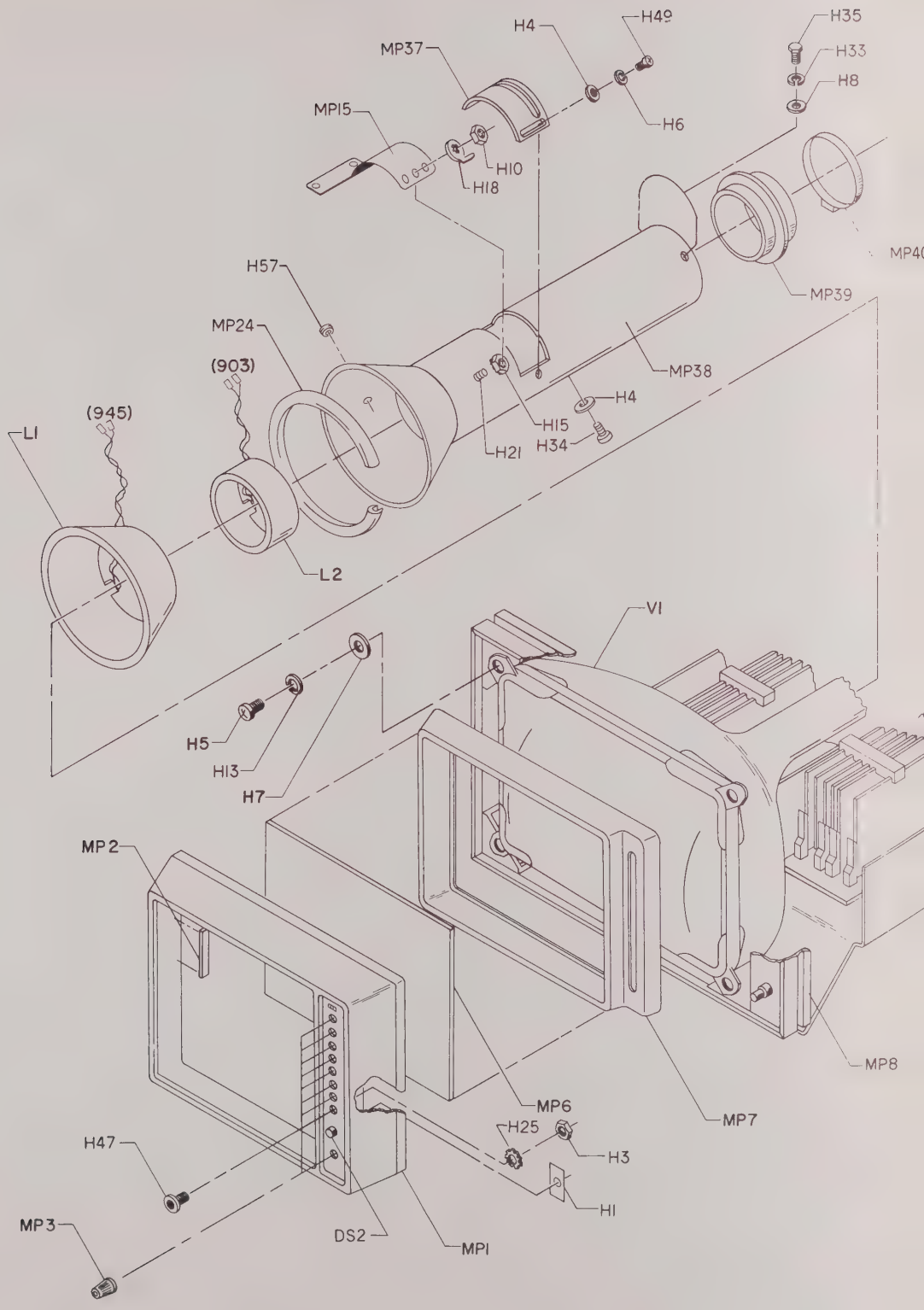
H4
H49
H35
MP37
H33
H8
MP15
H6
H10
H18
MP40
H57
MP39
MP24
MP38
(903)
H4
H15
H34
H21
(945)
LI
L2
VI
H5
HI3
H7
MP2
MP8
MP6
MP7
H25
H3
H47
HI
MP3
DS2
MPI

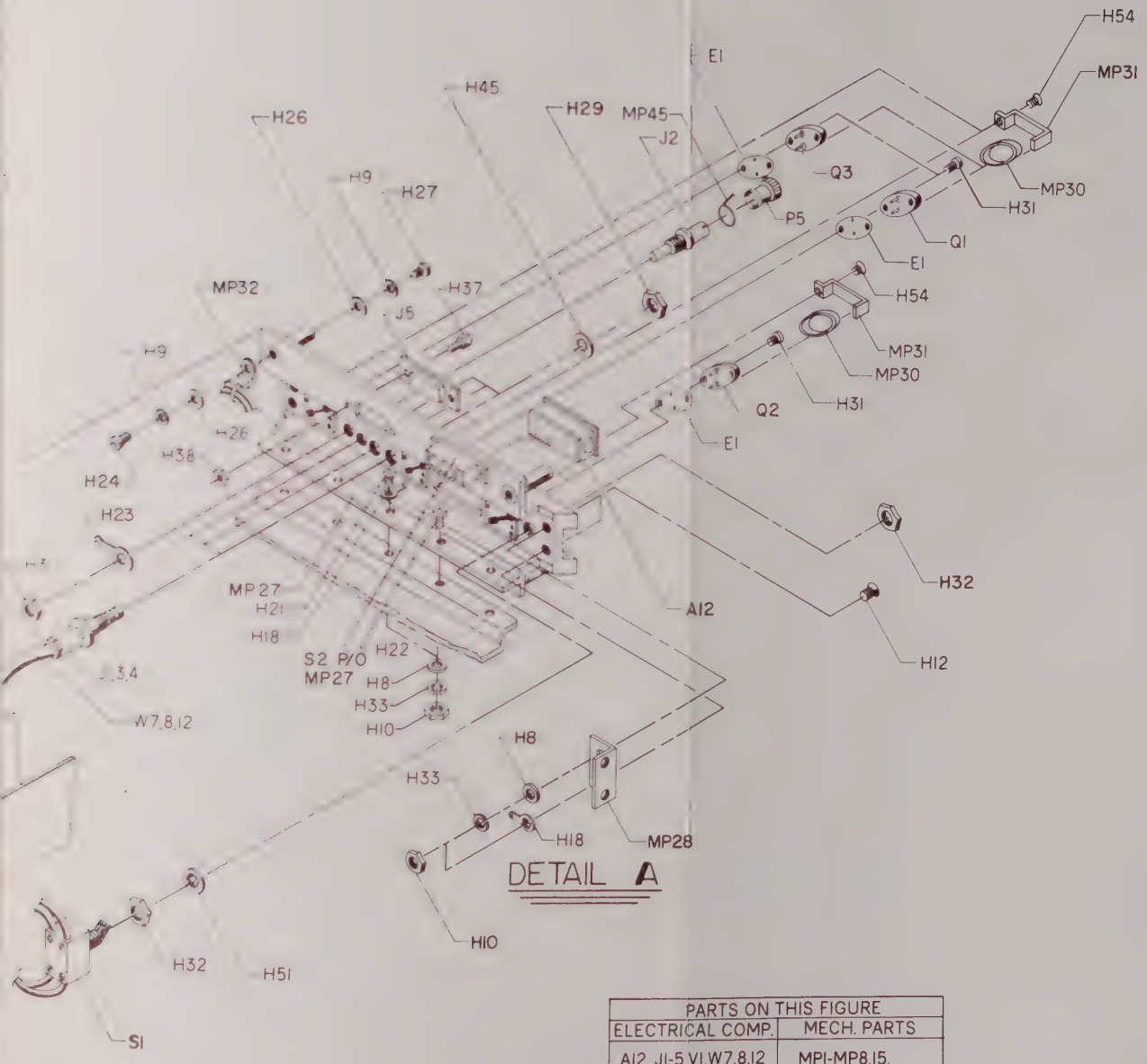

PARTS ON THIS FIGURE	
ELECTRICAL COMP.	MECH. PARTS
A12, J1-5, V1, W7,8,12 DS2 L1, L2 S1, S2 Q1, Q2, Q3	MP1-MP8, 15, 24, 27, 28 30-32, 37-40

Figure 6-1.
Chasis Parts and Board Assembly Identification

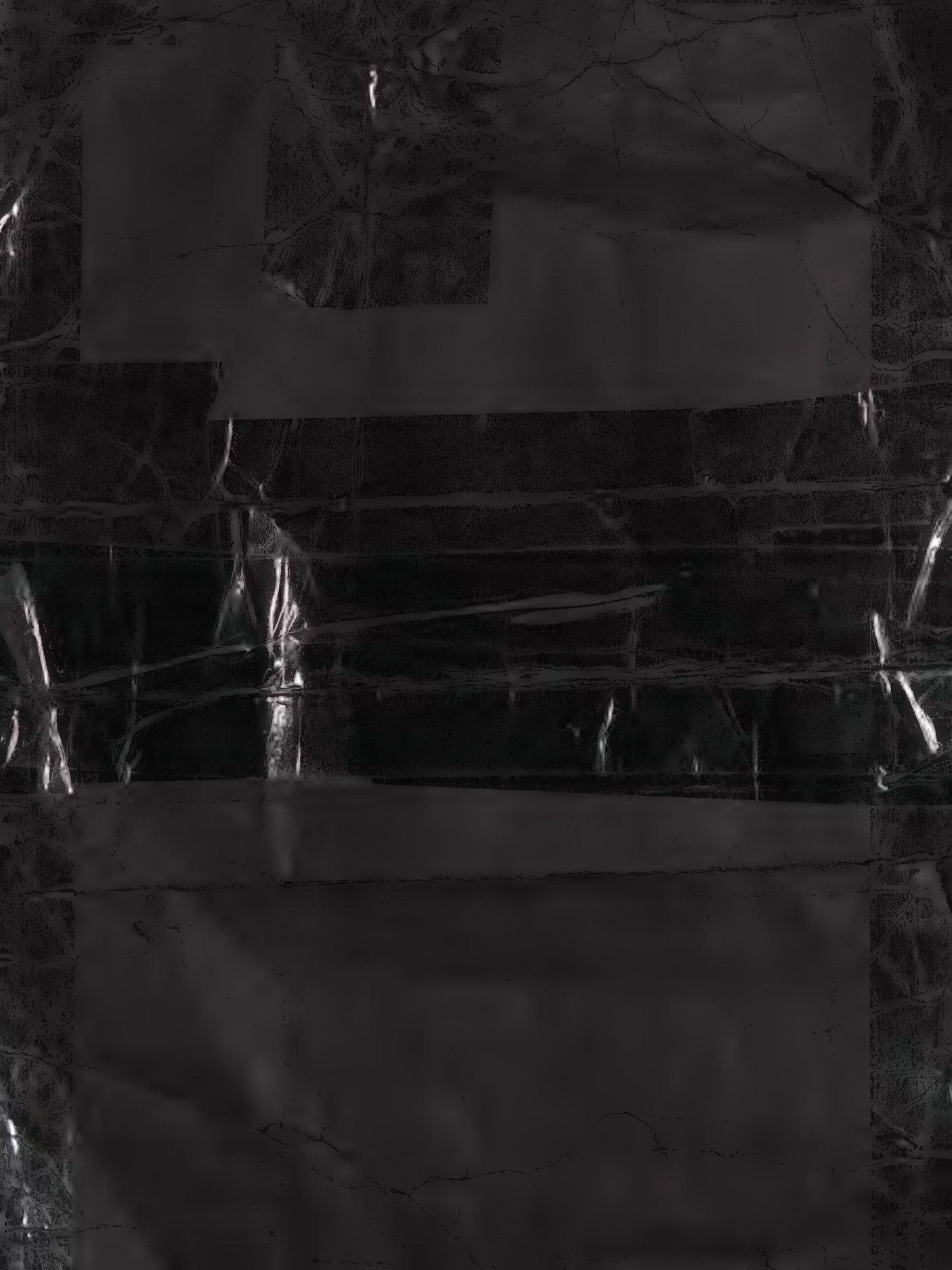

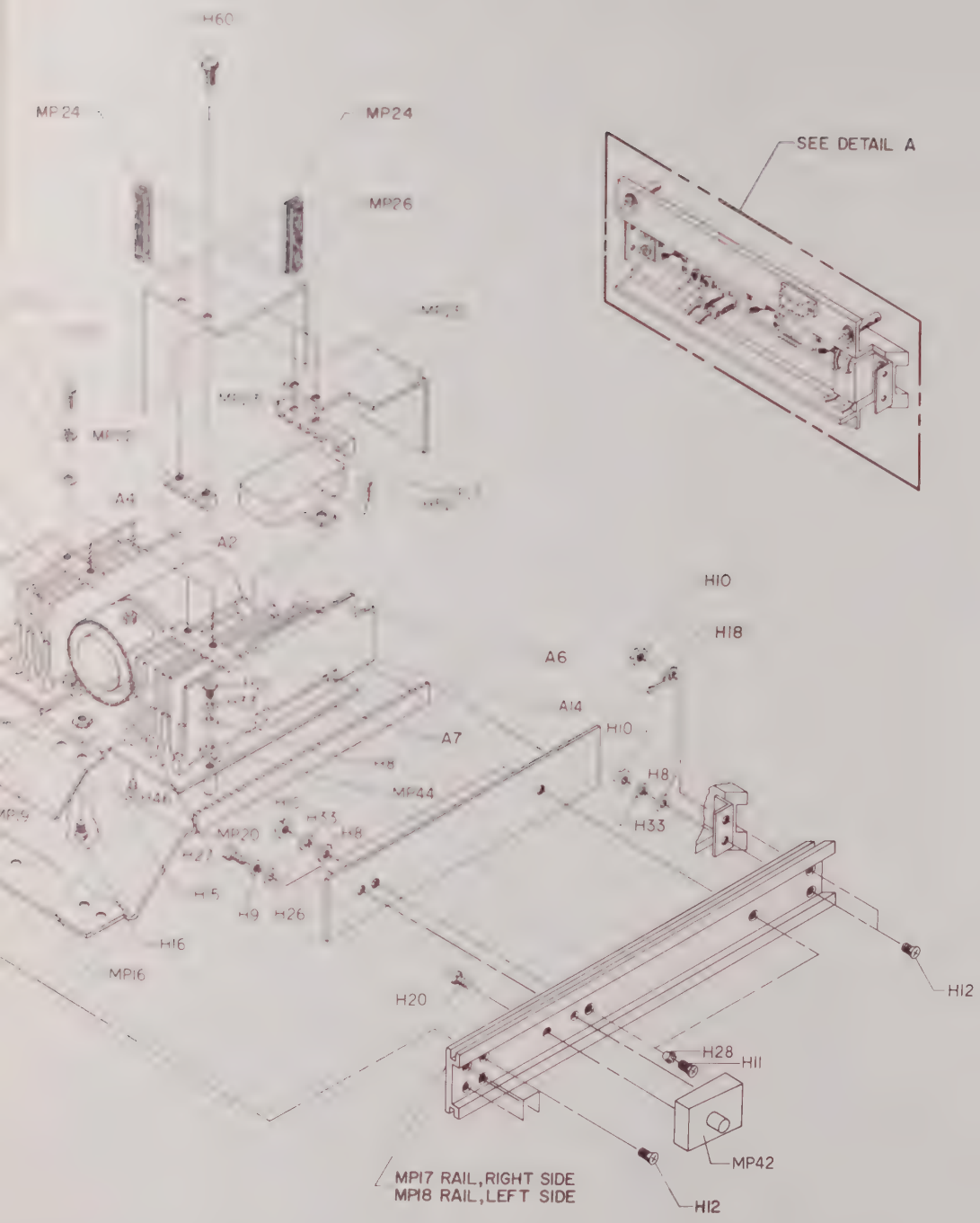

PARTS ON THIS FIGURE	
ELECTRICAL COMP.	MECH. PARTS
A1-A8 A14,R1	MP9-15, 16-26, 41-44

Figure 6-1. Chasis Parts and Board Assembly Identification (Sheet 2 of 3)

PARTS ON THIS FIGURE	
ELECTRICAL COMP.	MECH. PARTS.
A9,A10,A11 C1-C4 E2 Q4,Q5 T1	MP16, 33, 34, 36

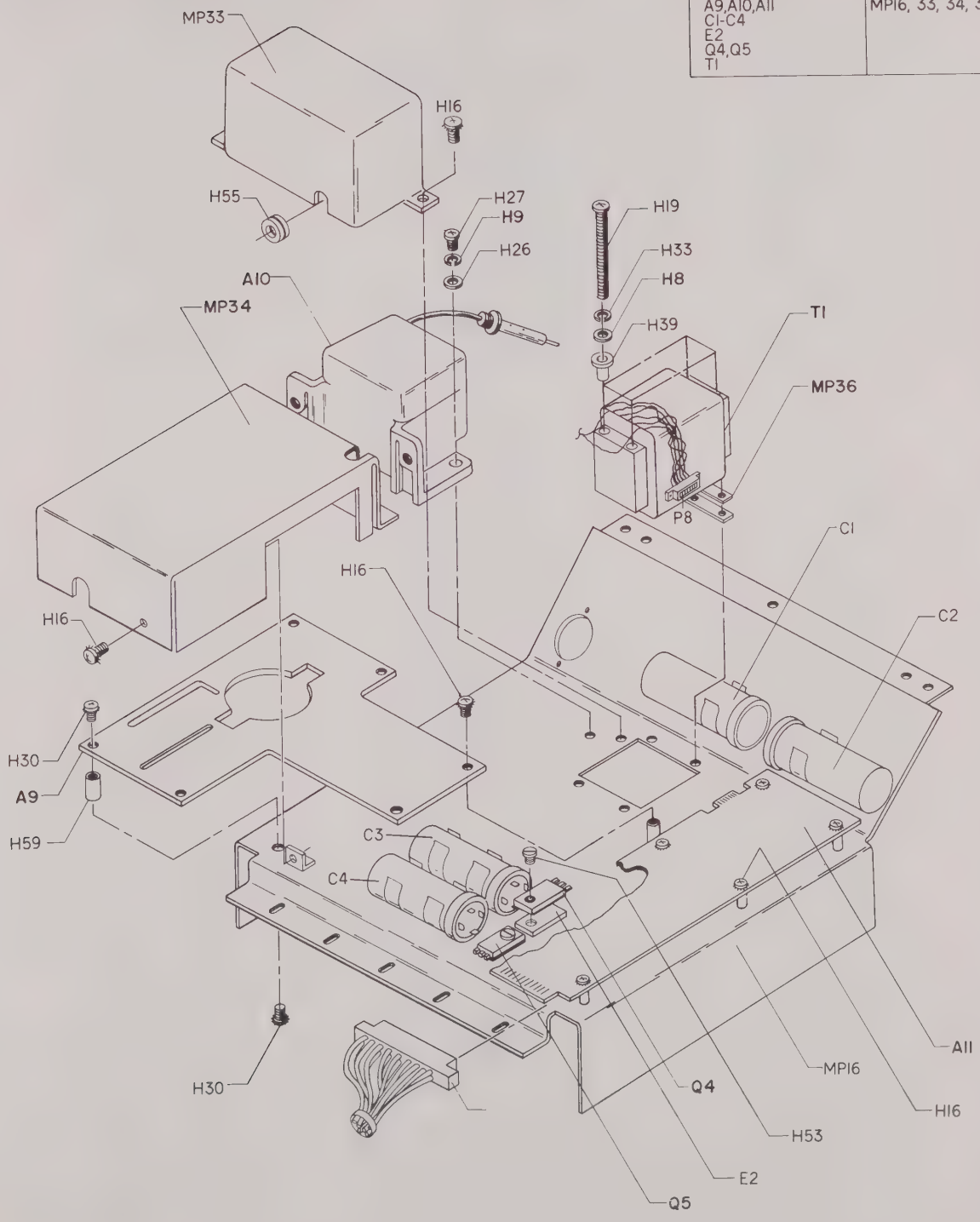

Figure 6-1. Chasis Parts and Board Assembly Identification (Sheet 3 of 3)

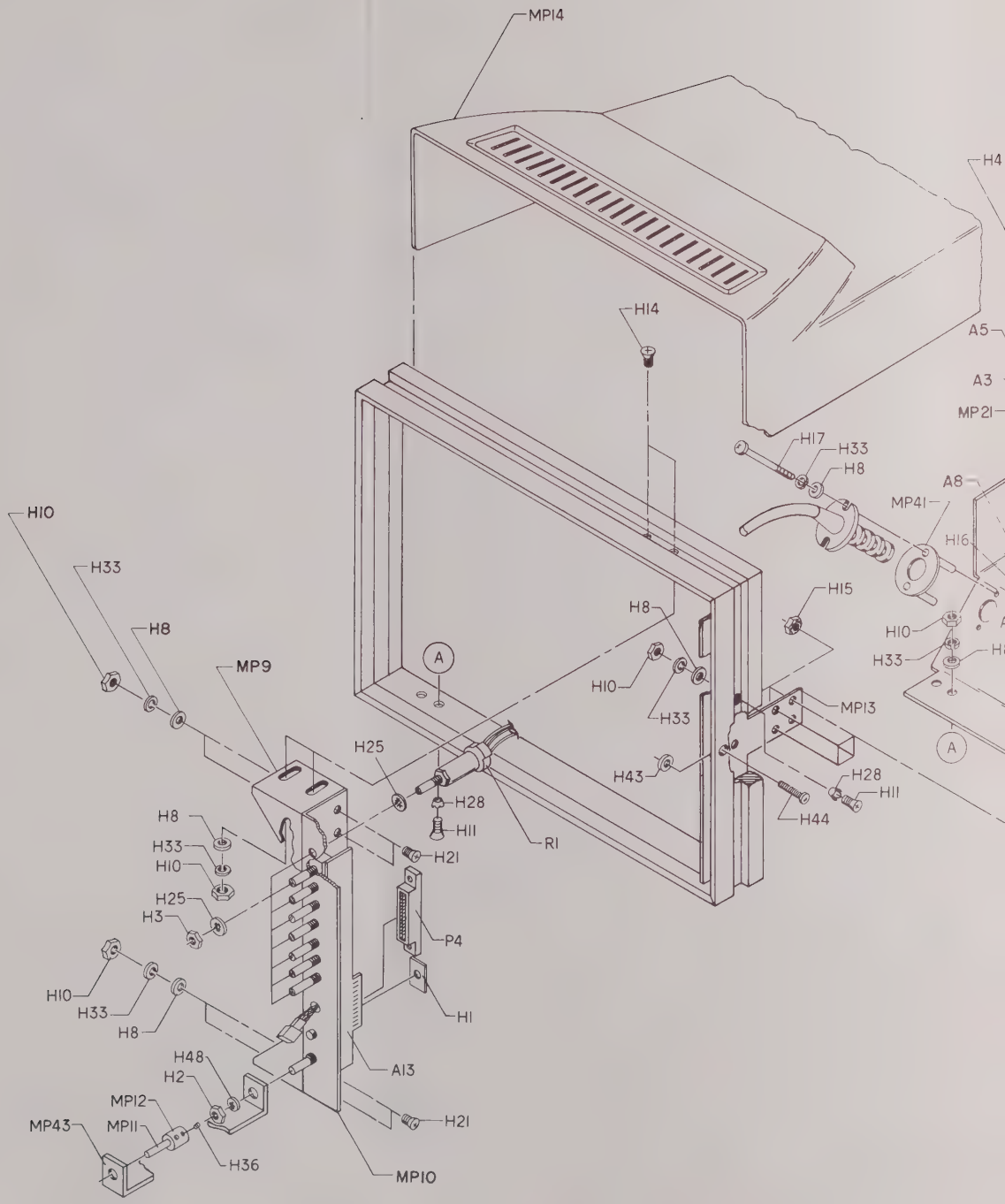
MP14
H4
H14
A5
A3
MP21
H17
H33
H8
A8
MP41
H16
H10
H33
H8
MP9
H15
H8
H10
H33
A
MP13
H25
H43
H28
H11
H44
H28
H11
R1
H8
H33
H10
H21
H25
H3
P4
H10
H33
H8
H1
H48
H2
A13
MP12
MP43
MP11
H21
H36
MP10

Table 6-2. Replaceable Parts (Cont'd)

Reference Designator	HP Part Number	C D	Qty	Description	Mfr Code	Mfr Part Number
				CHASSIS PARTS		
A1	01317-66503	6	2	PC BOARD ASSEMBLY-INPUT AMPLIFIER	28480	01317-66503
A2	01310-66530	2	2	PC BOARD ASSEMBLY-OUTPUT AMPLIFIER	28480	01310-66530
A3	01317-66503	6		PC BOARD ASSEMBLY-INPUT AMPLIFIER	28480	01317-66503
A4	01310-66530	2		PC BOARD ASSEMBLY-OUTPUT AMPLIFIER	28480	01310-66530
A5	01311-66507	4	1	PC BOARD ASSEMBLY-Z AXIS	28480	01311-66507
A6	01317-66501	4	1	PC BOARD ASSEMBLY-FOCUS	28480	01317-66501
A7	01317-66504	7	1	PC BOARD ASSEMBLY-LEFT CONNECTOR	28480	01317-66504
A8	01317-66505	8	1	PC BOARD ASSEMBLY-RIGHT CONNECTOR	28480	01317-66505
A9	01311-66508	5	1	PC BOARD ASSEMBLY-HIGH VOLTAGE	28480	01311-66508
A10	0960-0560	3	1	MULTIPLIER-HV	28480	0960-0560
A11	01310-66533	5	1	PC BOARD ASSEMBLY-LOW VOLTAGE POWER SUPPLY	28480	01310-66533
A12	0960-0444	2	1	LINE MODULE-UNFILTERED	28480	0960-0444
A13	01311-66503	0	1	PC BOARD ASSEMBLY-CONTROL	28480	01311-66503
A14	01310-66513	1	1	PC BOARD ASSEMBLY-EXTENDER	28480	01310-66513
A15	01311-68710	5	1	TILT STAND ASSY - STANDARD	28480	01311-68710
C1	0180-0030	2	2	CAPACITOR-FXD 120UF+75-10% 350VDC AL	28480	0180-0030
C2	0180-0030	2		CAPACITOR-FXD 120UF+75-10% 350VDC AL	28480	0180-0030
C3	0180-0213	9	2	CAPACITOR-FXD 5000UF+75-10% 25VDC AL	28480	0180-0213
C4	0180-0213	9		CAPACITOR-FXD 5000UF+75-10% 25VDC AL	28480	0180-0213
C5	0150-0052	1	2	CAPACITOR-FXD .05UF +-20% 400VDC CER	28480	0150-0052
C6	0150-0052	1		CAPACITOR-FXD .05UF +-20% 400VDC CER	28480	0150-0052
DS1	1450-0440	8	1	LIGHT-IND WHT-TL 4-DIA FKD-TERM PUSH-ON	28480	1450-0440
DS2	1450-0440	8		LIGHT-IND WHT-TL 4-DIA FKD-TERM PUSH-ON	28480	1450-0440
E1	0340-0875	9	3	INSULATOR-TRANSISTOR THERM-COND TO3	28480	0340-0875
E2	0340-0564	3	2	INSULATOR-TRANSISTOR THERM-COND	28480	0340-0564
E3	5040-0421	0	1	INSULATOR-POTENTIOMETER CASE	28480	5040-0421
E4	1200-0050	7	5	CONTACT-CRT SOCKET	28480	1200-0050
E5	0362-0441	1	7	CONNECTOR-SINGLE CONTACT (CRT NECK PIN)	28480	0362-0441
F1	2110-0006	3	1	FUSE 2AT FOR 100/120V OPERATION	71400	MDX2
F1	2110-0007	4	1	FUSE 1AT FOR 100/120V OPERATION	71400	MDX1
FL1	9135-0046	0	1	FILTER-POWER LINE INPUT	28480	9135-0046
H1	0510-0123	1	2	RETAINER-PUSH ON RECT EXT .312-IN-DIA	28480	0510-0123
H2	2950-0006	3	1	NUT-HEX-DBL-CHAM 1/4-32-THD .094-IN-THK	00000	ORDER BY DESCRIPTION
H3	2950-0001	8	18	NUT-HEX-DBL-CHAM 3/8-32-THD .094-IN-THK	00000	ORDER BY DESCRIPTION
H4	3050-0010	2	7	WASHER-FL MTLC NO. 6 .147-IN-ID	00000	ORDER BY DESCRIPTION
H5	2680-0105	0	4	SCREW-MACH 10-32 .625-IN-LG PAN-HD-POZI	00000	ORDER BY DESCRIPTION
H6	2190-0019	6	4	WASHER-LK HLCL NO. 4 .115-IN-ID	28480	2190-0019
H7	3050-0179	4	4	WASHER-FL MTLC NO. 10 .203-IN-ID	28480	3050-0179
H8	3050-0066	8	41	WASHER-FL MTLC NO. 6 .147-IN-ID	28480	3050-0066
H9	2190-0017	4	8	WASHER-LK HLCL NO. 8 .168-IN-ID	28480	2190-0017
H10	2420-0002	6	34	NUT-HEX-DBL-CHAM 6-32-THD .109-IN-THK	28480	2420-0002
H11	2360-0200	8	12	SCREW-MACH 6-32 .5-IN-LG 100 DEG	00000	ORDER BY DESCRIPTION
H12	2360-0120	1	16	SCREW-MACH 6-32 .438-IN-LG 82 DEG	00000	ORDER BY DESCRIPTION
H13	2190-0034	5	4	WASHER-LK HLCL NO. 10 .194-IN-ID	28480	2190-0034
H14	2360-0210	0	4	SCREW-MACH 6-32 .625-IN-LG 82 DEG	00000	ORDER BY DESCRIPTION
H15	2420-0001	5	13	NUT-HEX-W/LKWR 6-32-THD .109-IN-THK	00000	ORDER BY DESCRIPTION
H16	2360-0115	4	43	SCREW-MACH 6-32 .312-IN-LG PAN-HD-POZI	00000	ORDER BY DESCRIPTION
H17	2360-0137	0	2	SCREW-MACH 6-32 1.75-IN-LG PAN-HD-POZI	00000	ORDER BY DESCRIPTION
H18	0360-0001	5	6	TERMINAL-SLDR LUG LK-MTG FOR-#6-SCR	28480	0360-0001
H19	2360-0139	6	4	SCREW-MACH 6-32 2-IN-LG PAN-HD-POZI	00000	ORDER BY DESCRIPTION
H20	2510-0049	2	2	SCREW-MACH LKING 8-32 .5-IN-LG PAN-HD-POZI	00000	ORDER BY DESCRIPTION
H21	2360-0201	9	13	SCREW-MACH 6-32 .5-IN-LG PAN-HD-POZI	00000	ORDER BY DESCRIPTION
H22	2360-0121	2	3	SCREW-MACH LKING 6-32 .5-IN-LG PAN-HD-POZI	00000	ORDER BY DESCRIPTION
H23	0360-1632	0	1	TERMINAL-SLDR LUG LK-MTG FOR-#3/8-SCR	28480	0360-1632
H24	2510-0103	9	3	SCREW-MACH 8-32 .375-IN-LG PAN-HD-POZI	00000	ORDER BY DESCRIPTION
H25	2190-0016	3	17	WASHER-LK INTL T 3/8 IN .377-IN-ID	28480	2190-0016
H26	3050-0001	1	11	WASHER-FL MTLC NO. 8 .172-IN-ID	28480	3050-0001
H27	2510-0107	3	8	SCREW-MACH 8-32 .5-IN-LG PAN-HD-POZI	00000	ORDER BY DESCRIPTION
H28	2190-0047	0	12	WASHER-LK 82 CTSK EXT T NO. 6 .142-IN-ID	28480	2190-0047
H29	2950-0054	1	3	NUT-HEX-DRL-CHAM 1/2-28-THD .125-IN-THK	00000	ORDER BY DESCRIPTION
H30	2360-0361	2	2	SCREW-MACH 6-32 (NYL) .375-IN-LG PAN-HD-SLT	00000	ORDER BY DESCRIPTION
H31	0624-0232	4	6	SCREW-TPG 6-20 .5-IN-LG PAN-HD-SLT STL	00000	ORDER BY DESCRIPTION
H32	2950-0035	8	3	NUT-HEX-DBL CHAM 15/32-32-THD	00000	ORDER BY DESCRIPTION
H33	2190-0018	5	42	WASHER-LK HLCL NO.6 .141-IN-ID	28480	2190-0018
H34	0624-0206	2	1	SCREW-TPG 6-32 .25-IN-LG PAN-HD-POZI STL	00000	ORDER BY DESCRIPTION
H35	0624-0310	9	2	SCREW-TPG 6-19 .312-IN-LG HEX-HD STL	28480	0624-0310
H36	3030-0007	5	2	SCREW-SET 4-40 .125-IN-LG SMALL CUP-PT	00000	ORDER BY DESCRIPTION
H37	01338-21001	0	2	D CONNECTOR SCREWS	28480	01338-21001
H38	2260-0013	9	2	NUT-HEX-MET LKG 4-40-THD .157-IN-THK	00000	ORDER BY DESCRIPTION
H39	0340-0114	9	4	INSULATOR-FLANGED-BUSHING NYLON	00000	ORDER BY DESCRIPTION
H40	3050-0235	3	4	WASHER-FL MTLC NO.4 .117-IN-ID	28480	3050-0235

See introduction to this section for ordering information

Table 6-2. Replaceable Parts (Cont'd)

Reference Designator	HP Part Number	C D	Qty	Description	Mfr Code	Mfr Part Number
H41	0520-0129	8	2	SCREW-MACH 2-56 .312-IN-LG PAN-HD-POZI	00000	ORDER BY DESCRIPTION
H42	0610-0001	6	2	NUT-HEX-DBL-CHAM 2-56-THD .062-IN-THK	00000	ORDER BY DESCRIPTION
H43	3050-0016	8	2	WASHER-FL MTLC NO. 6 .142-IN-ID	00000	ORDER BY DESCRIPTION
H44	2360-0195	0	2	SCREW-MACH 6-32 .312-IN-LG PAN-HD-POZI	00000	ORDER BY DESCRIPTION
H45	2190-0068	5	3	WASHER-LK INTL T 1/2 IN .505-IN-ID	00000	ORDER BY DESCRIPTION
H46	2200-0105	4	14	SCREW-MACH 4-40 .312-IN-LG PAN-HD-POZI	00000	ORDER BY DESCRIPTION
H47	1410-0052	4	9	BUSHING -PANEL .272-ID .438-LG 3/8-32-THD	00000	ORDER BY DESCRIPTION
H48	2190-0084	5	1	WASHER-LK INTL T 1/4 IN .256-IN-ID	00000	ORDER BY DESCRIPTION
H49	2200-0141	8	2	SCREW-MACH 4-40 .312-IN-LG PAN-HD-POZI	00000	ORDER BY DESCRIPTION
H50	2360-0199	4	4	SCREW-MACH 6-32 .438-IN-LG PAN-HD-POZI	00000	ORDER BY DESCRIPTION
H51	2190-0102	8	1	WASHER-LK INTL T 15/32 IN .472-IN-ID	00000	ORDER BY DESCRIPTION
H52	2200-0103	2	2	SCREW-MACH 4-40 .25-IN-LG PAN-HD-POZI	00000	ORDER BY DESCRIPTION
H53	2360-0370	3	2	SCREW-MACH 6-32 .375-IN-LG PAN-HD-POZI	00000	ORDER BY DESCRIPTION
H54	2200-0542	3		SCREW-MACH 4-40 .25-IN-LG 100 DEG	00000	ORDER BY DESCRIPTION
H55	0400-0010	2	2	GROMMET-ROUND .25-IN-ID .375-IN-GRV-OD	00000	ORDER BY DESCRIPTION
H56	0400-0011	3	1	GROMMET-RND .375-IN-ID .5-IN-GRV-OD	00000	ORDER BY DESCRIPTION
H57	0400-0009	9	3	GROMMET-RND .125-IN-ID .25-IN-GRV-OD	00000	ORDER BY DESCRIPTION
H58	0400-0001	1	1	GROMMET-RND .562-IN-ID .75-IN-GRV-OD	00000	ORDER BY DESCRIPTION
H59	0340-0001	5	1	STANDOFF-RND 1-IN-LG 6-32THD .375-IN-OD	00000	ORDER BY DESCRIPTION
H60	2360-0117	6	4	SCREW-MACH 6-32 .375-IN-LG PAN-HD-POZI	00000	ORDER BY DESCRIPTION
J1	P/O W12			CONNECTOR-RF BNC FEM PLUG 50-OHM		
J2	1250-0118	3	1	CONNECTOR-RF BNC FEM SGL-HOLE-FR 50-OHM	28480	1250-0118
J3	P/O W7			CONNECTOR-RF BNC FEM PLUG 50-OHM		
J4	P/O W8			CONNECTOR-RF BNC FEM PLUG 50-OHM		
J5(P/O W10)	1251-0064	0	1	CONNECTOR-25 PIN, F D SERIES	28480	1251-0064
J7				NOT ASSIGNED		
J8				NOT ASSIGNED		
J9				NOT ASSIGNED		
J10(P/O V1)	1251-2964	3	1	CONNECTOR-SPL PURP,SGL HI-V,F RECP,POLETH	28480	1251-2964
L1	5080-0435	8	1	COIL ASSY-TRACE ALIGN	28480	5060-0435
L2	01336-66002	3	1	COIL ASSY-ORTHOG ALIGN	28480	01336-66002
MP1	01311-44109		1	OUTER FRONT PANEL MASK	28480	01311-44109
MP2	5001-0439		8	BEZEL STRIP	28480	5001-0439
MP3	0370-1093	4	1	KNOB-BASE-PTR 3/8 OBP .125-IN-ID	28480	0370-1093
MP4	01311-00206	2	1	PANEL-FRONT	28480	01311-00206
MP5	1410-0052		1	POT BUSHING	28480	1410-0052
MP6	1000-0565		1	FILTER GLASS	28480	1000-0565
MP7	01311-44108		1	MASK INNER	28480	01311-44108
MP8	01311-63707	0	1	EXTRUSION ASSEMBLY-FRAME	28480	01311-63707
MP9	01310-01203	0	2	BRACKET-CORNER SUPPORT	28480	01310-01203
MP10	01311-00201		1	FRONT SUB PANEL	28480	01311-00201
MP11	01311-23708	7	1	SHAFT-EXTENSION	28480	01311-23708
MP12	1490-0841	7	1	COUPLER-RGD .375-LG BRS	28480	1490-0841
MP13	01311-01201	9	2	BRACKET-T SPLICE	28480	01311-01201
MP14	01311-44106	3	2	COVER	28480	01311-44106
MP15	01311-01203	1	1	GROUND STRAP	28480	01311-01203
MP16	01311-00104	9	1	DECK-MAIN	28480	01311-00104
MP17	01311-23707	6	1	RAIL-RIGHT SIDE	28480	01311-23707
MP18	01311-23706	5	1	RAIL-LEFT SIDE	28480	01311-23706
MP19	01311-00603	3	1	SHIELD-TRANSFORMER	28480	01311-00603
MP20	5040-0170	6	14	GUIDE: PLUG-IN PC BOARD	28480	5040-0170
MP21	01310-00601	0	4	SHIELD-AMPLIFIER	28480	01310-00601
MP22	5040-5892	9	2	HOLDER-PC BOARD, RIGHT	28480	5040-5892
MP23	5040-5891	8	2	HOLDER-PC BOARD, LEFT	28480	5040-5891
MP24	4320-0095	7	AR	U CHANNEL NPRN .047-WD-CHAN .219-WD.	28480	4320-0095
MP25	01321-00601	3	1	SHIELD-FOCUS	28480	01321-00601
MP26	01321-00603	5	1	SHIELD-Z AXIS	28480	01321-00603
MP27	01311-23722	5	1	RAIL-REAR	28480	01311-23722
MP28	01311-01204	2	2	BRACKET-REAR	28480	01311-01204
MP29				NOT ASSIGNED		
MP30	0340-0486	8	3	INSULATOR-COVER NYLON	28480	0340-0486
MP31	01310-01215	4	3	CLAMP-TRANSISTOR COVER	28480	01310-01215
MP32	1400-0335	5	3	CABLE TIE 1.75-DIA .188-WD NYL	28480	1400-0335
MP33	01311-04102	5	1	COVER-MULTIPLIER	28480	01311-04102
MP34	01311-04101	4	1	COVER-HIGH VOLTAGE	28480	01311-04101
MP35				NOT ASSIGNED		
MP36	01310-04702	0	4	SPACER-TRANSFORMER	28480	01310-04702
MP37	01310-00608	7	1	SHIELD-NECK PIN	28480	01310-00608
MP38	01310-00607	2	1	SHIELD-CRT	28480	01310-00607
MP39	01310-21201	0	1	SPACER RING-CRT CLAMP	28480	01310-21201
MP40	1400-0026	1	1	CLAMP-CRT	28480	1400-0026

See introduction to this section for ordering information

Table 6-2. Replaceable Parts (Cont'd)

Reference Designator	HP Part Number	C D	Qty	Description	Mfr Code	Mfr Part Number
MP41	01311-01207	5	1	BRACKET-POST ACCELERATOR CONNECTOR	28480	01311-01207
MP42	01311-61202	6	2	PIVOT BLOCK-TILT STAND MOUNTING	28480	01311-61202
MP43	01311-61203	7	1	BRACKET-INTENSITY CONTROL SHAFT	28480	01311-61203
MP44	1400-0017	0	2	CABLE CLAMP .312-DIA .375-WD	28480	1400-0017
MP45	4040-1008	0	1	STRAP SHORTING PLUG TETHER	28480	4040-1008
P1	1251-1190		2	CONN PC 24 F	28480	1251-1190
P2	1251-1190			CONN PC 24 F	28480	1251-1190
P3	1251-0159		1	CONN PC 30 F	28480	1251-0159
P4	01317-27601		1	CONN PC 20 F	28480	01317-27601
P5	1250-0929	4	1	SHORTING CAP-BNC	28480	1250-0929
P6				NOT ASSIGNED		
P7				NOT ASSIGNED		
P8	1251-1765	0	1	CONNECTOR PC 6 CONTACT FEMALE	28480	1251-1765
Q1	1854-0417	5	1	TRANSISTOR NPN SI TO-3 PD=80W	28480	1854-0417
Q2	1854-0063	7	2	TRANSISTOR NPN 2N3055 SI TO=3 PD=115W	01928	2N3055
Q3	1854-0063	7		TRANSISTOR NPN 2N3055 SI TO=3 PD=115W	01928	2N3055
Q4	1854-0558	5	1	TRANSISTOR NPN SI DARL PD=70W FT=1MHZ	28480	1854-0558
Q5	1854-0433	5	1	TRANSISTOR NPN SI PD=90W FT=2MHZ	28480	1854-0433
R1	2100-3811	3	1	RESISTOR-VAR CONTROL CCP 500K 20% LIN	28480	2100-3811
S1	3101-2332	4	1	SWITCH-TGL BASIC DPST 6A 250VAC/DC SCR	28480	3101-2332
T1	9100-4254	7	1	TRANSFORMER-POWER	28480	9100-4254
V1	5083-3251		1	CRT P31	28480	5083-3251
W1	8120-1378	1	1	POWER CORD ASSY	28480	8120-1378
W2	01310-61629	0	2	CABLE-ASSEMBLY OUTPUT	28480	01310-61629
W3	01310-61629	0		CABLE-ASSEMBLY OUTPUT	28480	01310-61629
W4	01311-61612	2	1	CABLE ASSEMBLY-MAIN	28480	01311-61612
W5				NOT ASSIGNED		
W6				NOT ASSIGNED		
W7	01310-61606	3	2	CABLE ASSEMBLY-INPUT	28480	01310-61606
W8	01310-61606	3		CABLE ASSEMBLY-INPUT	28480	01310-61606
W9	01310-61622	3	1	CABLE ASSEMBLY-HV	28480	01310-61622
W10	01321-61612	4	1	CABLE ASSEMBLY-BINARY TTL INPUT	28480	01321-61612
W11	01311-61602	0	1	CABLE ASSEMBLY-TTL BLANKING INPUT	28480	01311-61602
W12	01310-61626	7	1	CABLE ASSEMBLY-INPUT (Z AXIS)	28480	01310-61626

See introduction to this section for ordering information

Table 6-2. Replaceable Parts (Cont'd)

Reference Designator	HP Part Number	C D	Qty	Description	Mfr Code	Mfr Part Number
A1	01317-66503	6	1	BOARD ASSEMBLY-INPUT AMPLIFIER	28480	01317-66503
A1C1	0160-3451	1	5	CAPACITOR-FXD .01μF +80-20% 100VDC CER	28480	0160-3451
A1C2	0160-3451	1		CAPACITOR-FXD .01μF +80-20% 100VDC CER	28480	0160-3451
A1C3	0160-3451	1		CAPACITOR-FXD .01μF +80-20% 100VDC CER	28480	0160-3451
A1C4	0160-0174	9	2	CAPACITOR-FXD 47μF +80-20% 25VDC CER	28480	0160-0174
A1C5	0160-3443	1	7	CAPACITOR-FXD 1μF +80-20% 50VDC CER	28480	0160-3443
A1C6	0160-3451	1		CAPACITOR-FXD .01μF +80-20% 100VDC CER	28480	0160-3451
A1C7	0160-3443	1		CAPACITOR-FXD 1μF +80-20% 50VDC CER	28480	0160-3443
A1C8	0160-2197	0	2	CAPACITOR-FXD 10PF ±5% 300VDC MICA	28480	0160-2197
A1C9	0160-2197	0		CAPACITOR-FXD 10PF ±5% 300VDC MICA	28480	0160-2197
A1C10	0160-0168	1	7	CAPACITOR-FXD 1μF ±10% 200VDC POLYE	28480	0160-0168
A1C11	0160-3443	1		CAPACITOR-FXD 1μF +80-20% 50VDC CER	28480	0160-3443
A1C12	0160-3443	1		CAPACITOR-FXD 1μF +80-20% 50VDC CER	28480	0160-3443
A1C13	0160-0168	1		CAPACITOR-FXD 1μF ±10% 200VDC POLYE	28480	0160-0168
A1C14	0160-0168	1		CAPACITOR-FXD .1μF ±10% 200VDC POLYE	28480	0160-0168
A1C15	0160-0168	1		CAPACITOR-FXD 1μF ±10% 200VDC POLYE	28480	0160-0168
A1C16	0160-3451	1		CAPACITOR-FXD .01μF +80-20% 100VDC CER	28480	0160-3451
A1C17	0160-0168	1		CAPACITOR-FXD 1μF ±10% 200VDC POLYE	28480	0160-0168
A1C18	0160-0168	1		CAPACITOR-FXD 1μF ±10% 200VDC POLYE	28480	0160-0168
A1C19	0160-0174	9		CAPACITOR-FXD 47μF +80-20% 25VDC CER	28480	0160-0174
A1C20	0140-0196	3	1	CAPACITOR-FXD 150PF ±5% 300VDC MICA	72136	DM15F151J0300WV1CR
A1C21	0160-0168	1		CAPACITOR-FXD .1μF ±10% 200VDC POLYE	28480	0160-0168
A1C22	0160-2254	0	1	CAPACITOR-FXD 7 5PF ± 25PF 500VDC CER	28480	0160-2254
A1C23	0160-3443	1		CAPACITOR-FXD 1μF +80-20% 50VDC CER	28480	0160-3443
A1C24	0160-3443	1		CAPACITOR-FXD .1μF +80-20% 50VDC CER	28480	0160-3443
A1C25	0160-3443	1	7	CAPACITOR-FXD 1μF +80-20% 50VDC CER	28480	0160-3443
A1CR1	1901-0376	6	4	DIODE-GEN PRP 35V 50MA DO-35	28480	1901-0376
A1CR2	1901-0376	6		DIODE-GEN PRP 35V 50MA DO-35	28480	1901-0376
A1CR3	1901-0376	6		DIODE-GEN PRP 35V 50MA DO-35	28480	1901-0376
A1CR4	1901-0376	6		DIODE-GEN PRP 35V 50MA DO-35	28480	1901-0376
A1CR5	1901-0033	2	8	DIODE-GEN PRP 180V 200MA DO-7	28480	1901-0033
A1CR6	1901-0033	2		DIODE-GEN PRP 180V 200MA DO-7	28480	1901-0033
A1CR7	1901-0033	2		DIODE-GEN PRP 180V 200MA DO-7	28480	1901-0033
A1CR8	1901-0033	2		DIODE-GEN PRP 180V 200MA DO-7	28480	1901-0033
A1CR9	1901-0040	1	7	DIODE-SWITCHING 30V 50MA 2NS DO-35	28480	1901-0040
A1CR10	1901-0040	1		DIODE-SWITCHING 30V 50MA 2NS DO-35	28480	1901-0040
A1CR11	1901-0040	1		DIODE-SWITCHING 30V 50MA 2NS DO-35	28480	1901-0040
A1CR12	1901-0040	1		DIODE-SWITCHING 30V 50MA 2NS DO-35	28480	1901-0040
A1CR13	1901-0033	2		DIODE-GEN PRP 180V 200MA DO-7	28480	1901-0033
A1CR14	1901-0033	2		DIODE-GEN PRP 180V 200MA DO-7	28480	1901-0033
A1CR15	1901-0033	2		DIODE-GEN PRP 180V 200MA DO-7	28480	1901-0033
A1CR16	1901-0033	2		DIODE-GEN PRP 180V 200MA DO-7	28480	1901-0033
A1CR17	1901-0040	1		DIODE-SWITCHING 30V 50MA 2NS DO-35	28480	1901-0040
A1CR18	1901-0040	1		DIODE-SWITCHING 30V 50MA 2NS DO-35	28480	1901-0040
A1CR19	1901-0040	1		DIODE-SWITCHING 30V 50MA 2NS DO-35	28480	1901-0040
A1CR20	1901-0513	3	2	DIODE-DUAL 100V	28480	1901-0513
A1CR21				NOT ASSIGNED		
A1CR22				NOT ASSIGNED		
A1CR23	1901-0513	3		DIODE-DUAL 100V	28480	1901-0513
A1L1	9100-2276	9	2	COIL-MLD 100μH 10% Q=50 095DX 25LG-NOM	28480	9100-2276
A1L2	9100-2276	9		COIL-MLD 100μH 10% Q=50 095DX 25LG-NOM	28480	9100-2276
A1Q1	1855-0262	0	1	TRANSISTOR-JFET DUAL N-CHAN D-MODE SI	28480	1855-0262
A1Q2				NOT ASSIGNED		
A1Q3	1853-0036	2	4	TRANSISTOR PNP SI PD=310MW FT=250MHZ	28480	1853-0036
A1Q4	1853-0036	2		TRANSISTOR PNP SI PD=310MW FT=250MHZ	28480	1853-0036
A1Q5	1854-0071	7	7	TRANSISTOR NPN SI PD=300MW FT=200MHZ	28480	1854-0071
A1Q6	1854-0071	7		TRANSISTOR NPN SI PD=300MW FT=200MHZ	28480	1854-0071
A1Q7	1854-0071	7		TRANSISTOR NPN SI PD=300MW FT=200MHZ	28480	1854-0071
A1Q8	1853-0316	1	1	TRANSISTOR-DUAL PNP PD=500MW	28480	1853-0316
A1Q9	1854-0071	7		TRANSISTOR NPN SI PD=300MW FT=200MHZ	28480	1854-0071
A1Q10	1854-0071	7		TRANSISTOR NPN SI PD=300MW FT=200MHZ	28480	1854-0071
A1Q11	1853-0276	2	3	TRANSISTOR PNP SI TO-52 PD=360MW	04713	MM3906
A1Q12	1853-0276	2		TRANSISTOR PNP SI TO-52 PD=360MW	04713	MM3906
A1Q13	1853-0276	2		TRANSISTOR PNP SI TO-52 PD=360MW	04713	MM3906
A1Q14	1853-0036	2		TRANSISTOR PNP SI PD=310MW FT=250MHZ	28480	1853-0036
A1Q15	1853-0036	2		TRANSISTOR PNP SI PD=310MW FT=250MHZ	28480	1853-0036
A1Q16	1854-0071	7		TRANSISTOR NPN SI PD=300MW FT=200MHZ	28480	1854-0071
A1Q17	1854-0071	7		TRANSISTOR NPN SI PD=300MW FT=200MHZ	28480	1854-0071
A1R1	0698-5965	5	1	RESISTOR 50 1% 5W F TC=0±100	28480	0698-5965
A1R2	0687-4701	2	1	RESISTOR 47 10% 5W CC TC=0+412	01121	EB4701
A1R3	0757-0340	6	1	RESISTOR 10K 1% 25W F TC=0±100	24546	C5-1/4-TO-1002-F
A1R4	0684-1041	1	2	RESISTOR 100K 10% 25W FC TC=-400/+800	01121	CB1041
A1R5	0684-1041	1		RESISTOR 100K 10% 25W FC TC=-400/+800	01121	CB1041

Table 6-2. Replaceable Parts (Cont'd)

Reference Designator	HP Part Number	C D	Qty	Description	Mfr Code	Mfr Part Number
A1R6	0684 3901	6	2	RESISTOR 39 10% 25W FC TC -400/+500	01121	CB3901
A1R7	0684 3901	6		RESISTOR 39 10% 25W FC TC= 400/+500	01121	CB3901
A1R8				NOT ASSIGNED		
A1R9				NOT ASSIGNED		
A1R10	0757-0280	3	7	RESISTOR 1K 1% 125W F TC=0±100	24546	C4-1/8-TO-1001-F
A1R11	2100 3352	7	2	RESISTOR TRMR 1K 10% C SIDE-ADJ 1-TRN	28480	2100-3352
A1R12	2100 3352	7		RESISTOR-TRMR 1K 10% C SIDE ADJ 1-TRN	28480	2100-3352
A1R13	0698 3447	4	1	RESISTOR 422 1% 125W F TC=0±100	24546	C4-1/8-TO-422R-F
A1R14	0757 0283	6	1	RESISTOR 2K 1% 125W F TC=0+100	24546	C4-1/8-TO-2001-F
A1R15	0757-0419	0	1	RESISTOR 681 1% 125W F TC=0+100	24546	C4-1/8-TO-681R-F
A1R16	0757 0412	3	2	RESISTOR 365 1% 125W F TC=0+100	24546	C4 1/8-TO-365R-F
A1R17				NOT ASSIGNED		
A1R18				NOT ASSIGNED		
A1R19	0757-0442	9	4	RESISTOR 10K 1% 125W F TC 0+100	24546	C4-1/8-TO-1002-F
A1R20				NOT ASSIGNED		
A1R21				NOT ASSIGNED		
A1R22	0757-0442	9		RESISTOR 10K 1% 125W F TC=0±100	24546	C4-1/8-TO-1002-F
A1R23	0757 0280	3		RESISTOR 1K 1% 125W F TC=0+100	24546	C4-1/8-TO-1001-F
A1R24	0757-0417	8	2	RESISTOR 562 1% 125W F TC=0±100	24546	C4-1/8-TO-562R-F
A1R25	0757 0417	8		RESISTOR 562 1% 125W F TC=0±100	24546	C4-1/8-TO-562R-F
A1R26	0757 0394	0	2	RESISTOR 51 1 1% 125W F TC=0+100	24546	C4-1/8-TO-51R1-F
A1R27	0757-0401	0	2	RESISTOR 100 1% 125W F TC=0±100	24546	C4-1/8-TO-101-F
A1R28	0757-0442	9		RESISTOR 10K 1% 125W F TC 0±100	24546	C4-1/8-TO-1002-F
A1R29	0757-0401	0		RESISTOR 100 1% 125W F TC=0±100	24546	C4-1/8-TO-101-F
A1R30				NOT ASSIGNED		
A1R31	0757-0394	0		RESISTOR 51 1 1% 125W F TC=0±100	24546	C4-1/8-TO-51R1-F
A1R32	0698 0084	9	2	RESISTOR 2 15K 1% 125W F TC=0±100	24546	C4-1/8-TO-2151-F
A1R33	0757-0408	7	2	RESISTOR 243 1% 125W F TC=0±100	24546	C4-1/8-TO-243R F
A1R34	0757-0273	4	1	RESISTOR 3 01K 1% 125W F TC=0±100	24546	C4-1/8-TO 3011-F
A1R35	0757-0408	7		RESISTOR 243 1% 125W F TC=0±100	24546	C4-1/8-TO-243R-F
A1R36	0757-0416	7	3	RESISTOR 511 1% 125W F TC=0±100	24546	C4-1/8-TO-511R-F
A1R37	0757 0416	7		RESISTOR 511 1% 125W F TC 0±100	24546	C4-1/8-TO-511R-F
A1R38	0757-0412	3		RESISTOR 365 1% 125W F TC=0±100	24546	C4-1/8-TO-365R-F
A1R39	0684 5621	1	3	RESISTOR 5 6K 10% 25W FC TC=-400/+700	01121	CB5621
A1R40	0684 1531	4	2	RESISTOR 15K 10% 25W FC TC=-400/+800	01121	CB1531
A1R41	0757-0442	9		RESISTOR 10K 1% 125W F TC 0±100	24546	C4-1/8-TO-1002-F
A1R42	0757-0415	6	2	RESISTOR 475 1% 125W F TC=0±100	24546	C4-1/8-TO-475R-F
A1R43	0757-0415	6		RESISTOR 475 1% 125W F TC 0±100	24546	C4-1/8-TO-475R-F
A1R44	0698 0085	0	1	RESISTOR 2 61K 1% 125W F TC=0±100	24546	C4-1/8-TO-2611-F
A1R45	0757-0421	4	1	RESISTOR 825 1% 125W F TC=0+100	24546	C4-1/8-TO-825R-F
A1R46	0757-0280	3		RESISTOR 1K 1% 125W F TC=0±100	24546	C4-1/8-TO-1001-F
A1R47	0684-2201	7	5	RESISTOR 22 10% 25W FC TC= 400/+500	01121	CB2201
A1R48	0757-0280	3		RESISTOR 1K 1% 125W F TC=0+100	24546	C4-1/8-TO 1001-F
A1R49	0757-0281	4	4	RESISTOR 2 74K 1% 125W F TC 0±100	24546	C4-1/8-TO-2741-F
A1R50	0757-0416	7		RESISTOR 511 1% 125W F TC=0+100	24546	C4-1/8-TO-511R-F
A1R51	0684-2201	7		RESISTOR 22 10% 25W FC TC=-400/+500	01121	CB2201
A1R52	0757 0280	3		RESISTOR 1K 1% 125W F TC 0±100	24546	C4-1/8-TO-1001-F
A1R53	0757-0281	4		RESISTOR 2 74K 1% 125W F TC=0±100	24546	C4-1/8-TO-2741-F
A1R54	0684-2201	7		RESISTOR 22 10% 25W FC TC=-400/+500	01121	CB2201
A1R55	0684-2201	7		RESISTOR 22 10% 25W FC TC -400/+500	01121	CB2201
A1R56	0684 2221	1	2	RESISTOR 2 2K 10% 25W FC TC=-400/+700	01121	CB2221
A1R57	0684-1021	7	2	RESISTOR 1K 10% 25W FC TC= 400/+600	01121	CB1021
A1R58	0684 2221	1		RESISTOR 2 2K 10% 25W FC TC=-400/+700	01121	CB2221
A1R59	0684-1021	7		RESISTOR 1K 10% 25W FC TC -400/+600	01121	CB1021
A1R60	0684-2201	7		RESISTOR 22 10% 25W FC TC=-400/+500	01121	CB2201
A1R61	0698-3150	6	1	RESISTOR 2 37K 1% 125W F TC=0±100	24546	C4-1/8-TO-2371-F
A1R62	0684-5601	7	11	RESISTOR 56 10% 25W FC TC -400/+500	01121	CB5601
A1R63	0684-5601	7		RESISTOR 56 10% 25W FC TC=-400/+500	01121	CB5601
A1R64	2100-3349	2	1	RESISTOR-TRMR 100 10% C SIDE-ADJ 1-TRN	28480	2100-3349
A1R65	0684-5601	7		RESISTOR 56 10% 25W FC TC=-400/+500	01121	CB5601
A1R66	0684-5621	1		RESISTOR 5 6K 10% 25W FC TC=-400/+700	01121	CB5621
A1R67	0684-5601	7		RESISTOR 56 10% 25W FC TC=-400/+500	01121	CB5601
A1R68	0757-0281	4		RESISTOR 2 74K 1% 125W F TC=0±100	24546	C4-1/8-TO-2741-F
A1R69	0757-0280	3		RESISTOR 1K 1% 125W F TC=0+100	24546	C4-1/8-TO-1001-F
A1R70	0757-0281	4		RESISTOR 2 74K 1% 125W F TC=0±100	24546	C4-1/8-TO-2741-F
A1R71	0684-5621	1	3	RESISTOR 5 6K 10% 25W FC TC=-400/+700	01121	CB5621
A1R72	0684-5601	7		RESISTOR 56 10% 25W FC TC -400/+500	1121	CB5601
A1R73	0684-5601	7		RESISTOR 56 10% 25W FC TC=-400/+500	1121	CB5601
A1R74	0698-3153	9	2	RESISTOR 3 83K 1% 125W F TC=0+100	24546	C4-1/8-TO-3831-F
A1R75	0698-3153	9		RESISTOR 3 83K 1% 125W F TC=0±100	24546	C4-1/8-TO 3831-F
A1R76	0684-1841	9	1	RESISTOR 180K 10% 25W FC TC=-800/+900	01121	CB1841
A1R77	0684-5601	7		RESISTOR 56 10% 25W FC TC -400/+500	1121	CB5601
A1R78	0684 1051	3	1	RESISTOR 1M 10% 25W FC TC= 800/+900	01121	CB1051
A1R79	0684 2231	3	1	RESISTOR 22K 10% 25W FC TC=-400/+800	01121	CB2231
A1R80	0684-1531	4		RESISTOR 15K 10% 25W FC TC=-400/+800	01121	CB1531

See introduction to this section for ordering information

Table 6-2. Replaceable Parts (Cont'd)

Reference Designator	HP Part Number	C D	Qty	Description	Mfr Code	Mfr Part Number
A1R81	0684-5601	7		RESISTOR 56 10% 25W FC TC=-400/+500	01121	CB5601
A1R82	0757-0284	7	2	RESISTOR 150 1% 125W F TC=0+100	24546	C4-1/8-TO 151-F
A1R83	0757-0469	0	1	RESISTOR 150K 1% 125W F TC 0+100	24546	C4 1/8-TO-1503-F
A1R84	0757-0284	7	2	RESISTOR 150 1% 125W F TC=0+100	24546	C4-1/8-TO 151 F
A1R85	0684-5601	7		RESISTOR 56 10% 25W FC TC= 400/+500	01121	CB5601
A1R86	0757-0407	6	1	RESISTOR 200 1% 125W F TC=0+100	24546	C4-1/8-TO 201-F
A1R87	0757-0280	3		RESISTOR 1K 1% 125W F TC=0+100	24546	C4-1/8-TO 1001-F
A1R88	0698-0084	9		RESISTOR 2 15K 1% 125W F TC 0+100	24546	C4-1/8-TO-2151-F
A1R89	0684-5601	7		RESISTOR 56 10% 25W FC TC=-400/+500	01121	CB5601
A1R90	0684-5601	7		RESISTOR 56 10% 25W FC TC=-400 +500	01121	CB5601
A1R91	0757-0441	8	1	RESISTOR 8 25K 1% 125W F TC=0+100	24546	C4-1/8-TO 8251-F
A1S1	3101-0973	5	1	SWITCH-SL DPDT MINTR 5A 125VAC/DC PC	28480	3101-0973
A1U1	1820-0352	6	1	TRANSISTOR ARRAY	02735	CA3018
A1U2	1858-0040	8	1	TRANSISTOR ARRAY	02735	CA3127A
A1XU1	1200-0607	0	1	SOCKET-IC 16-CONT DIP-SLDR	28480	1200-0607
A1VR1	1902-3139	7	1	DIODE-ZNR 8 25V DO-7 PD= 4W TC=+ 053%	28480	1902-3139

See introduction to this section for ordering information

Table 6-2. Replaceable Parts (Cont'd)

Reference Designator	HP Part Number	C D	Qty	Description	Mfr Code	Mfr Part Number
A2	01310-66530	2	1	PC BOARD ASSEMBLY OUTPUT AMPLIFIER	28480	01310-66530
A2C1	0160-3451	1	8	CAPACITOR-FXD .01μF +80-20% 100VDC CER	28480	0160-3451
A2C2	0160-3451	1		CAPACITOR-FXD .01μF +80-20% 100VDC CER	28480	0160-3451
A2C3	0160-2150	5	2	CAPACITOR-FXD 33PF ±5% 300VDC MICA	28480	0160-2150
A2C4	0160-3451	1		CAPACITOR-FXD .01μF +80-20% 100VDC CER	28480	0160-3451
A2C5	0160-3451	1		CAPACITOR-FXD .01μF +80-20% 100VDC CER	28480	0160-3451
A2C6	0170-0063	6	2	CAPACITOR FXD .02μF +10% 400VDC POLYE	84411	663UW20394
A2C7	0160-3451	1		CAPACITOR-FXD .01μF +80-20% 100VDC CER	28480	0160-3451
A2C8	0121-0407	9	2	CAPACITOR-V TRMR PSTN 7-3PF 600V	72982	536-016
A2C9	0170-0022	7	3	CAPACITOR-FXD 1μF +20% 600VDC POLYE	28480	0170-0022
A2C10				NOT ASSIGNED		
A2C11	0160 2150	5		CAPACITOR FXD 33PF ±5% 300VDC MICA	28480	0160-2150
A2C12	0121-0407	9		CAPACITOR V TRMR PSTN 7-3PF 600V	72982	536-016
A2C13	0160-3451	1		CAPACITOR-FXD .01μF +80-20% 100VDC CER	28480	0160-3451
A2C14	0160-3451	1		CAPACITOR-FXD .01μF +80-20% 100VDC CER	28480	0160-3451
A2C15	0170-0063	6		CAPACITOR-FXD .02μF ±10% 400VDC POLYE	84411	663UW20394
A2C16	0160-3451	1		CAPACITOR-FXD .01μF +80-20% 100VDC CER	28480	0160-3451
A2C17	0121-0474	0	1	CAPACITOR-V TRMR PSTN 3-1 5PF 600V	28480	0121-0474
A2C18	0170-0022	7		CAPACITOR-FXD 1μF ±20% 600VDC POLYE	28480	0170-0022
A2C19	0170-0022	7		CAPACITOR-FXD 1μF ±20% 600VDC POLYE	28480	0170-0022
A2C20	0180-0374	3	2	CAPACITOR-FXD 10μF ±10% 20VDC TA	56289	150D106X9020B2
A2C21	0180 0374	3		CAPACITOR-FXD 10μF ±10% 20VDC TA	56289	150D106X9020B2
A2C22	0160 3443	1	2	CAPACITOR FXD 1μF +80-20% 50VDC CER	28480	0160-3443
A2C23	0160-3443	1		CAPACITOR-FXD 1μF +80-20% 50VDC CER	28480	0160-3443
A2CR1	1901-0033	2	4	DIODE-GEN PRP 180V 200MA DO-7	28480	1901-0033
A2CR2	1901-0033	2		DIODE-GEN PRP 180V 200MA DO-7	28480	1901-0033
A2CR3	1901-0033	2		DIODE-GEN PRP 180V 200MA DO-7	28480	1901-0033
A2CR4	1901-0033	2		DIODE-GEN PRP 180V 200MA DO-7	28480	1901-0033
A2CR5	1901-0040	1	12	DIODE-SWITCHING 30V 50MA 2NS DO-35	28480	1901-0040
A2CR6	1901-0040	1		DIODE-SWITCHING 30V 50MA 2NS DO-35	28480	1901-0040
A2CR7	1901-0040	1		DIODE-SWITCHING 30V 50MA 2NS DO-35	28480	1901-0040
A2CR8	1901-0040	1		DIODE-SWITCHING 30V 50MA 2NS DO-35	28480	1901-0040
A2CR9	1901 0040	1		DIODE-SWITCHING 30V 50MA 2NS DO-35	28480	1901-0040
A2CR10	1901 0040	1		DIODE-SWITCHING 30V 50MA 2NS DO-35	28480	1901-0040
A2CR11	1901 0040	1		DIODE-SWITCHING 30V 50MA 2NS DO-35	28480	1901-0040
A2CR12	1901-0040	1		DIODE-SWITCHING 30V 50MA 2NS DO-35	28480	1901-0040
A2CR13	1901-0040	1		DIODE-SWITCHING 30V 50MA 2NS DO-35	28480	1901-0040
A2CR14	1901-0040	1		DIODE-SWITCHING 30V 50MA 2NS DO-35	28480	1901-0040
A2CR15	1901-0040	1		DIODE-SWITCHING 30V 50MA 2NS DO-35	28480	1901-0040
A2CR16	1901-0040	1		DIODE-SWITCHING 30V 50MA 2NS DO-35	28480	1901-0040
A2Q1	1853-0036	2	4	TRANSISTOR PNP SI PD=310MW FT=250MHZ	28480	1853-0036
A2Q2	1853-0036	2		TRANSISTOR PNP SI PD=310MW FT=250MHZ	28480	1853-0036
A2Q3				NOT ASSIGNED		
A2Q4	1853-0036	2		TRANSISTOR PNP SI PD=310MW FT=250MHZ	28480	1853-0036
A2Q5	1854-0215	1	2	TRANSISTOR NPN SI PD 350MW FT=300MHZ	04713	2N3904
A2Q6	1853-0038	4	4	TRANSISTOR PNP SI TO-39 PD=1W FT=100MHZ	28480	1853-0038
A2Q7	1853-0038	4		TRANSISTOR PNP SI TO-39 PD=1W FT=100MHZ	28480	1853-0038
A2Q8	1854-0271	9	2	TRANSISTOR NPN SI TO-39 PD 1W FT=150MHZ	28480	1854-0271
A2Q9	1854 0523	4	2	TRANSISTOR NPN SI TO-39 PD=1W FT=150MHZ	28480	1854-0523
A2Q10	1854-0215	1		TRANSISTOR NPN SI PD=350MW FT=300MHZ	04713	2N3904
A2Q11	1853 0036	2		TRANSISTOR PNP SI PD=310MW FT=250MHZ	28480	1853-0036
A2Q12	1854-0271	9		TRANSISTOR NPN SI TO-39 PD=1W FT 150MHZ	28480	1854-0271
A2Q13	1854-0523	4		TRANSISTOR NPN SI TO-39 PD 1W FT 150MHZ	28480	1854-0523
A2Q14	1853-0038	4		TRANSISTOR PNP SI TO-39 PD 1W FT 100MHZ	28480	1853-0038
A2Q15	1853-0038	4		TRANSISTOR PNP SI TO-39 PD 1W FT=100MHZ	28480	1853-0038
A2R1	0684-4701	6	4	RESISTOR 47 10% 25W FC TC=-400/+500	01121	CB4701
A2R2	0684-4701	6		RESISTOR 47 10% 25W FC TC=-400/+500	01121	CB4701
A2R3	0684-5601	7	2	RESISTOR 56 10% 25W FC TC=-400/+500	01121	CB5601
A2R4	0684-5601	7		RESISTOR 56 10% 25W FC TC=-400/+500	01121	CB5601
A2R5	0698-3153	9	1	RESISTOR 3 83K 1% 125W F TC=0±100	24546	C4-1/8-TO-3831-F
A2R6	0757-0280	3	1	RESISTOR 1K 1% 125W F TC=0±100	24546	C4-1/8-TO-1001-F
A2R7	0698-0085	0	2	RESISTOR 2 61K 1% 125W F TC=0±100	24546	C4-1/8-TO-2611-F
A2R8	0757-0278	9	2	RESISTOR 1 78K 1% 125W F TC=0±100	24546	C4-1/8-TO-1781-F
A2R9	0698-3159	5	2	RESISTOR 26 1K 1% 125W F TC=0±100	24546	C4-1/8-TO-2612-F
A2R10	0684-1811	3	5	RESISTOR 180 10% 25W FC TC=-400/+600	01121	CB1811
A2R11	0684-2711	4	2	RESISTOR 270 10% 25W FC TC=-400/+600	01121	CB2711
A2R12	0698-0085	0		RESISTOR 2 61K 1% 125W F TC=0+100	24546	C4-1/8-TO-2611-F
A2R13	0757-0278	9		RESISTOR 1 78K 1% 125W F TC=0±100	24546	C4-1/8-TO-1781-F
A2R14	0698-3159	5		RESISTOR 26 1K 1% 125W F TC=0+100	24546	C4-1/8-TO-2612-F
A2R15	0684-2711	4		RESISTOR 270 10% 25W FC TC=-400/+600	01121	CB2711
A2R16	0684 1811	3		RESISTOR 180 10% 25W FC TC=-400/+600	01121	CB1811
A2R17	0684-1001	3	2	RESISTOR 10 10% 25W FC TC=-400/+500	01121	CB1001
A2R18	0698-3655	6	2	RESISTOR 56K 5% 2W MO TC 0±200	27167	FP42-2-TOO-5602-J
A2R19	0698-3155	1	2	RESISTOR 4 64K 1% 125W F TC=0±100	24546	C4-1/8-TO-4641-F
A2R20	0757-0159	5	2	RESISTOR 1K 1% 5W F TC=0+100	28480	0757-0159

See introduction to this section for ordering information

Table 6-2. Replaceable Parts (Cont'd)

Reference Designator	HP Part Number	C D	Qty	Description	Mfr Code	Mfr Part Number
A2R21	0764-0021	5	4	RESISTOR 9 1K 5% 2W MO TC=0+200	28480	0764-0021
A2R22	0764-0021	5		RESISTOR 9 1K 5% 2W MO TC=0+200	28480	0764-0021
A2R23	0684-1021	7	2	RESISTOR 1K 10% 25W FC TC= 400/+600	01121	CB1021
A2R24	2100-2692	6	1	RESISTOR-TRMR 1M 20% C SIDE-ADJ 1-TRN	30983	ET50X105
A2R25	0757-0438	3	2	RESISTOR 5 11K 1% 125W F TC 0+100	24546	C4-1/8-TO-5111-F
A2R26	0684-4701	6		RESISTOR 47 10% 25W FC TC -400/+500	01121	CB4701
A2R27	0761-0076	4	2	RESISTOR 18K 5% 1W MO TC=0+200	28480	0761-0076
A2R28	0761-0074	2	2	RESISTOR 15K 5% 1W MO TC=0+200	28480	0761-0074
A2R29	0698-3646	5	4	RESISTOR 12K 5% 2W MO TC=0+200	27167	FP42-2-TOO-1202-J
A2R30	0698-3646	5		RESISTOR 12K 5% 2W MO TC 0+200	27167	FP42-2 TOO 1202-J
A2R31	0757-0480	5	1	RESISTOR 432K 1% 125W F TC=0+100	19701	MF4C1/8-TO-4323 F
A2R32	0698-3646	5		RESISTOR 12K 5% 2W MO TC 0±200	27167	FP42-2-TOO-1202-J
A2R33	0684-1811	3		RESISTOR 180 10% 25W FC TC -400/+600	01121	CB1811
A2R34	0698-3646	5		RESISTOR 12K 5% 2W MO TC=0±200	27167	FP42-2-TOO-1202-J
A2R35	0757-0438	3		RESISTOR 5 11K 1% 125W F TC 0+100	24546	C4-1/8-TO-5111-F
A2R36	0684-4701	6		RESISTOR 47 10% 25W FC TC -400/+500	01121	CB4701
A2R37	0684-1001	3		RESISTOR 10 10% 25W FC TC=-400/+500	01121	CB1001
A2R38	0698-3655	6		RESISTOR 56K 5% 2W MO TC=0±200	27167	FP42-2-TOO-5602-J
A2R39	0684-1811	3		RESISTOR 180 10% 25W FC TC= 400/+600	01121	CB1811
A2R40	0698-3155	1		RESISTOR 4 64K 1% 125W F TC=0±100	24546	C4-1/8-TO-4641-F
A2R41	0757-0159	5		RESISTOR 1K 1% 5W F TC=0±100	28480	0757-0159
A2R42	0761-0074	2		RESISTOR 15K 5% 1W MO TC=0±200	28480	0761-0074
A2R43	0761-0076	4		RESISTOR 18K 5% 1W MO TC=0+200	28480	0761-0076
A2R44	0764-0021	5		RESISTOR 9 1K 5% 2W MO TC=0+200	28480	0764-0021
A2R45	0764-0021	5		RESISTOR 9 1K 5% 2W MO TC=0+200	28480	0764-0021
A2R46	0684-1021	7		RESISTOR 1K 10% 25W FC TC= 400/+600	01121	CB1021
A2R47	0684-1811	3		RESISTOR 180 10% 25W FC TC -400/+600	01121	CB1811
				MISCELLANEOUS PARTS		
	1200-0185	9	8	INSULATOR-XSTR NYLON	28480	1200-0185
	1205-0073	4	8	HEAT SINK TO-5/TO-39-CS	28480	1205-0073

Table 6-2. Replaceable Parts (Cont'd)

Reference Designator	HP Part Number	C D	Qty	Description	Mfr Code	Mfr Part Number
A3	01317-66503	6	1	PC BOARD ASSEMBLY-INPUT AMPLIFIER	28480	01317-66503
A3C1	0160-3451	1	5	CAPACITOR FXD 01μF +80-20% 100VDC CER	28480	0160-3451
A3C2	0160-3451	1		CAPACITOR-FXD 01μF +80-20% 100VDC CER	28480	0160-3451
A3C3	0160-3451	1		CAPACITOR-FXD 01μF +80-20% 100VDC CER	28480	0160-3451
A3C4	0160-0174	9	2	CAPACITOR-FXD 47μF +80-20%25VDC CER	28480	0160-0174
A3C5	0160-3443	1	7	CAPACITOR-FXD 1μF +80-20% 50VDC CER	28480	0160-3443
A3C6	0160-3451	1		CAPACITOR-FXD 01μF +80-20% 100VDC CER	28480	0160-3451
A3C7	0160-3443	1		CAPACITOR-FXD 1μF +80-20% 50VDC CER	28480	0160-3443
A3C8	0160-2197	0	2	CAPACITOR-FXD 10PF ±5% 300VDC MICA	28480	0160-2197
A3C9	0160-2197	0		CAPACITOR-FXD 10PF ±5% 300VDC MICA	28480	0160-2197
A3C10	0160-0168	1	7	CAPACITOR-FXD 1μF +10% 200VDC POLYE	28480	0160-0168
A3C11	0160-3443	1		CAPACITOR-FXD 1μF +80-20% 50VDC CER	28480	0160-3443
A3C12	0160-3443	1		CAPACITOR-FXD 1μF +80-20% 50VDC CER	28480	0160-3443
A3C13	0160-0168	1		CAPACITOR-FXD 1μF +10% 200VDC POLYE	28480	0160-0168
A3C14	0160-0168	1		CAPACITOR-FXD 1μF ±10% 200VDC POLYE	28480	0160-0168
A3C15	0160-0168	1		CAPACITOR-FXD 1μF ±10% 200VDC POLYE	28480	0160-0168
A3C16	0160-3451	1		CAPACITOR-FXD 01μF +80-20% 100VDC CER	28480	0160-3451
A3C17	0160-0168	1		CAPACITOR-FXD 1μF +10% 200VDC POLYE	28480	0160-0168
A3C18	0160-0168	1		CAPACITOR-FXD 1μF ±10% 200VDC POLYE	28480	0160-0168
A3C19	0160-0174	9		CAPACITOR-FXD 47μF +80-20%25VDC CER	28480	0160-0174
A3C20	0140-0196	3	1	CAPACITOR-FXD 150PF ±5% 300VDC MICA	72136	DM15F151J0300WV1CR
A3C21	0160-0168	1		CAPACITOR-FXD 1μF ±10% 200VDC POLYE	28480	0160-0168
A3C22	0160-2254	0	1	CAPACITOR-FXD 7 5PF + 25PF 500VDC CER	28480	0160-2254
A3C23	0160-3443	1		CAPACITOR FXD 1μF +80-20% 50VDC CER	28480	0160-3443
A3C24	0160-3443	1		CAPACITOR-FXD 1μF +80-20% 50VDC CER	28480	0160-3443
A3C25	0160-3443	1		CAPACITOR-FXD 1μF +80-20% 50VDC CER	28480	0160-3443
A3CR1	1901-0376	6	4	DIODE-GEN PRP 35V 50MA DO-35	28480	1901-0376
A3CR2	1901-0376	6		DIODE GEN PRP 35V 50MA DO-35	28480	1901-0376
A3CR3	1901-0376	6		DIODE-GEN PRP 35V 50MA DO-35	28480	1901-0376
A3CR4	1901-0376	6		DIODE-GEN PRP 35V 50MA DO-35	28480	1901-0376
A3CR5	1901-0033	2	8	DIODE-GEN PRP 180V 200MA DO-7	28480	1901-0033
A3CR6	1901-0033	2		DIODE-GEN PRP 180V 200MA DO-7	28480	1901-0033
A3CR7	1901-0033	2		DIODE-GEN PRP 180V 200MA DO-7	28480	1901-0033
A3CR8	1901 0033	2		DIODE-GEN PRP 180V 200MA DO-7	28480	1901-0033
A3CR9	1901-0040	1	7	DIODE-SWITCHING 30V 50MA 2NS DO-35	28480	1901-0040
A3CR10	1901 0040	1		DIODE-SWITCHING 30V 50MA 2NS DO-35	28480	1901-0040
A3CR11	1901-0040	1		DIODE SWITCHING 30V 50MA 2NS DO-35	28480	1901-0040
A3CR12	1901-0040	1		DIODE-SWITCHING 30V 50MA 2NS DO-35	28480	1901-0040
A3CR13	1901-0033	2		DIODE-GEN PRP 180V 200MA DO-7	28480	1901-0033
A3CR14	1901-0033	2		DIODE-GEN PRP 180V 200MA DO-7	28480	1901-0033
A3CR15	1901-0033	2		DIODE-GEN PRP 180V 200MA DO-7	28480	1901-0033
A3CR16	1901-0033	2		DIODE-GEN PRP 180V 200MA DO-7	28480	1901-0033
A3CR17	1901-0040	1		DIODE-SWITCHING 30V 50MA 2NS DO 35	28480	1901-0040
A3CR18	1901-0040	1		DIODE-SWITCHING 30V 50MA 2NS DO-35	28480	1901-0040
A3CR19				NOT ASSIGNED		
A3CR20	1901-0513	3	2	DIODE-DUAL 100V	28480	1901-0513
A3CR21	1901-0513	3		DIODE-DUAL 100V	28480	1901-0513
A3CR22				NOT ASSIGNED		
A3CR23				NOT ASSIGNED		
A3CR24	1901-0040	1		DIODE-SWITCHING 30V 50MA 2NS DO-35	28480	1901-0040
A3L1	9100-2276	9	2	COIL-MLD 100μM 10% Q=50 095DX 25LG-NOM	28480	9100-2276
A3L2	9100-2276	9		COIL-MLD 100μM 10% Q=50 095DX 25LG-NOM	28480	9100-2276
A3Q1	1855-0262	0	1	TRANSISTOR-JFET DUAL N-CHAN D-MODE SI	28480	1855-0262
A3Q2				NOT ASSIGNED		
A3Q3	1853 0036	2	4	TRANSISTOR PNP SI PD=310MW FT=250MHZ	28480	1853-0036
A3Q4	1853 0036	2		TRANSISTOR PNP SI PD=310MW FT=250MHZ	28480	1853-0036
A3Q5	1854-0071	7	7	TRANSISTOR NPN SI PD=300MW FT=200 MHZ	28480	1854-0071
A3Q6	1854-0071	7		TRANSISTOR NPN SI PD=300MW FT=200 MHZ	28480	1854-0071
A3Q7	1854-0071	7		TRANSISTOR NPN SI PD=300MW FT=200 MHZ	28480	1854-0071
A3Q8	1853-0316	1	1	TRANSISTOR-DUAL PNP PD=500MW	28480	1853-0316
A3Q9	1854-0071	7		TRANSISTOR NPN SI PD=300MW FT=200 MHZ	28480	1854-0071
A3Q10	1854-0071	7		TRANSISTOR NPN SI PD=300MW FT=200 MHZ	28480	1854-0071
A3Q11	1853-0276	2	3	TRANSISTOR PNP SI TO-52 PD=360MW	04713	MM3906
A3Q12	1853-0276	2		TRANSISTOR PNP SI TO-52 PD=360MW	04713	MM3906
A3Q13	1853-0276	2		TRANSISTOR PNP SI TO-52 PD=360MW	04713	MM3906
A3Q14	1853-0036	2		TRANSISTOR PNP SI PD=310MW FT=250MHZ	28480	1853-0036
A3Q15	1853-0036	2		TRANSISTOR PNP SI PD=310MW FT=250MHZ	28480	1853-0036
A3Q16	1854-0071	7		TRANSISTOR NPN SI PD=300MW FT=200 MHZ	28480	1854-0071
A3Q17	1854-0071	7		TRANSISTOR NPN SI PD=300MW FT=200 MHZ	28480	1854-0071
A3R1	0698-5965	5	1	RESISTOR 50 1% 5W F TC=0±100	28480	0698-5965
A3R2	0687-4701	2	1	RESISTOR 47 10% 5W CC TC=0+412	01121	EB4701
A3R3	0757-0340	6	1	RESISTOR 10K 1% 25W F TC=0±100	24546	C5-1/4-TO-1002-F
A3R4	0684-1041	1	2	RESISTOR 100K 10% 25W FC TC=-400/+800	01121	CB1041
A3R5	0684-1041	1		RESISTOR 100K 10% 25W FC TC=-400/+800	01121	CB1041

See introduction to this section for ordering information

Table 6-2. Replaceable Parts (Cont'd)

Reference Designator	HP Part Number	C D	Qty	Description	Mfr Code	Mfr Part Number
A3R6	0684-3901	6	2	RESISTOR 39 10% 25W FC TC=-400/+500	01121	CB3901
A3R7	0684-3901	6		RESISTOR 39 10% 25W FC TC=-400/+500	01121	CB3901
A3R8				NOT ASSIGNED		
A3R9				NOT ASSIGNED		
A3R10	0757-0280	3	7	RESISTOR 1K 1% 125W F TC=0±100	24546	C4-1/8-TO-1001-F
A3R11	2100-3352	7	2	RESISTOR-TRMR 1K 10% C SIDE-ADJ 1-TRN	28480	2100-3352
A3R12	2100-3352	7		RESISTOR-TRMR 1K 10% C SIDE ADJ 1-TRN	28480	2100-3352
A3R13	0698-3447	4	1	RESISTOR 422 1% 125W F TC=0±100	24546	C4-1/8-TO 422R-F
A3R14	0757-0283	6	1	RESISTOR 2K 1% 125W F TC=0±100	24546	C4-1/8-TO-2001-F
A3R15	0757-0419	0	1	RESISTOR 681 1% 125W F TC=0±100	24546	C4-1/8-TO-681R-F
A3R16	0757-0412	3	2	RESISTOR 365 1% 125W F TC=0+100	24546	C4-1/8-TO-365R-F
A3R17				NOT ASSIGNED		
A3R18				NOT ASSIGNED		
A3R19	0757-0442	9	4	RESISTOR 10K 1% 125W F TC=0±100	24546	C4-1/8-TO-1002-F
A3R20				NOT ASSIGNED		
A3R21				NOT ASSIGNED		
A3R22	0757-0442	9		RESISTOR 10K 1% 125W F TC=0+100	24546	C4-1/8-TO-1002-F
A3R23	0757-0280	3		RESISTOR 1K 1% 125W F TC=0±100	24546	C4-1/8-TO-1001-F
A3R24	0757-0417	8	2	RESISTOR 562 1% 125W F TC=0±100	24546	C4-1/8-TO 562R-F
A3R25	0757-0417	8		RESISTOR 562 1% 125W F TC=0+100	24546	C4-1/8-TO 562R-F
A3R26	0757-0394	0	2	RESISTOR 51 1 1% 125W F TC=0±100	24546	C4-1/8-TO 51R1-F
A3R27	0757-0401	0	2	RESISTOR 100 1% 125W F TC=0±100	24546	C4-1/8-TO 101-F
A3R28	0757-0442	9		RESISTOR 10K 1% 125W F TC=0±100	24546	C4-1/8-TO-1002-F
A3R29	0757-0401	0		RESISTOR 100 1% 125W F TC=0+100	24546	C4-1/8-TO-101-F
A3R30				NOT ASSIGNED		
A3R31	0757-0394	0		RESISTOR 51 1 1% 125W F TC=0+100	24546	C4-1/8-TO-51R1-F
A3R32	0698-0084	9	2	RESISTOR 2 15K 1% 125W F TC=0+100	24546	C4-1/8-TO-2151-F
A3R33	0757-0408	7	2	RESISTOR 243 1% 125W F TC=0+100	24546	C4-1/8-TO-243R-F
A3R34	0757-0273	4	1	RESISTOR 3 01K 1% 125W F TC=0±100	24546	C4-1/8-TO-3011-F
A3R35	0757-0408	7		RESISTOR 243 1% 125W F TC=0+100	24546	C4-1/8-TO-243R-F
A3R36	0757-0416	7	3	RESISTOR 511 1% 125W F TC=0+100	24546	C4-1/8-TO-511R-F
A3R37	0757-0416	7		RESISTOR 511 1% 125W F TC=0+100	24546	C4-1/8-TO-511R-F
A3R38	0757-0412	3		RESISTOR 365 1% 125W F TC=0±100	24546	C4-1/8-TO 365R-F
A3R39	0684-5621	1	3	RESISTOR 5 6K 10% 25W FC TC 400/+700	01121	CB5621
A3R40	0684-1531	4	2	RESISTOR 15K 10% 25W FC TC= 400/+800	01121	CB1531
A3R41	0757-0442	9		RESISTOR 10K 1% 125W F TC=0+100	24546	C4-1/8-TO-1002-F
A3R42	0757-0415	6	2	RESISTOR 475 1% 125W F TC=0±100	24546	C4-1/8-TO-475R-F
A3R43	0757-0415	6		RESISTOR 475 1% 125W F TC=0±100	24546	C4-1/8-TO-475R-F
A3R44	0698-0085	0	1	RESISTOR 2 61K 1% 125W F TC 0+100	24546	C4-1/8-TO 2611-F
A3R45	0757-0421	4	1	RESISTOR 825 1% 125W F TC=0±100	24546	C4-1/8-TO-825R-F
A3R46	0757-0280	3		RESISTOR 1K 1% 125W F TC=0±100	24546	C4-1/8-TO-1001-F
A3R47	0684-2201	7	5	RESISTOR 22 10% 25W FC TC= 400/+500	01121	CB2201
A3R48	0757 0280	3		RESISTOR 1K 1% 125W F TC=0+100	24546	C4-1/8-TO-1001-F
A3R49	0757-0281	4	4	RESISTOR 2 74K 1% 125W F TC=0+100	24546	C4-1/8-TO 2741-F
A3R50	0757-0416	7		RESISTOR 511 1% 125W F TC=0±100	24546	C4-1/8-TO-511R-F
A3R51	0684-2201	7		RESISTOR 22 10% 25W FC TC= 400/+500	01121	CB2201
A3R52	0757-0280	3		RESISTOR 1K 1% 125W F TC=0±100	24546	C4-1/8-TO-1001-F
A3R53	0757-0281	4		RESISTOR 2 74K 1% 125W F TC=0+100	24546	C4-1/8-TO-2741-F
A3R54	0684-2201	7		RESISTOR 22 10% 25W FC TC=-400/+500	01121	CB2201
A3R55	0684-2201	7		RESISTOR 22 10% 25W FC TC=-400/+500	01121	CB2201
A3R56	0684 2221	1	2	RESISTOR 2 2K 10% 25W FC TC= 400/+700	01121	CB2221
A3R57	0684-1021	7	2	RESISTOR 1K 10% 25W FC TC=-400/+600	01121	CB1021
A3R58	0684-2221	1		RESISTOR 2 2K 10% 25W FC TC= 400/+700	01121	CB2221
A3R59	0684-1021	7		RESISTOR 1K 10% 25W FC TC=-400/+600	01121	CB1021
A3R60	0684-2201	7		RESISTOR 22 10% 25W FC TC=-400/+500	01121	CB2201
A3R61	0698-3150	6	1	RESISTOR 2 37K 1% 125W F TC=0+100	24546	C4-1/8-TO-2371-F
A3R62	0684-5601	7	1	RESISTOR 56 10% 25W FC TC=-400/+500	01121	CB5601
A3R63	0684-5601	7		RESISTOR 56 10% 25W FC TC= 400/+500	01121	CB5601
A3R64	2100-3349	2	1	RESISTOR-TRMR 100 10% C SIDE-ADJ 1-TRN	28480	2100-3349
A3R65	0684-5601	7		RESISTOR 56 10% 25W FC TC=-400/+500	01121	CB5601
A3R66	0684-5621	1		RESISTOR 5 6K 10% 25W FC TC=-400/+700	01121	CB5621
A3R67	0684 5601	7		RESISTOR 56 10% 25W FC TC=-400/+500	01121	CB5601
A3R68	0757-0281	4		RESISTOR 2 74K 1% 125W F TC 0+100	24546	C4-1/8-TO-2741-F
A3R69	0757-0280	3		RESISTOR 1K 1% 125W F TC=0±100	24546	C4-1/8-TO-1001-F
A3R70	0757-0281	4		RESISTOR 2 74K 1% 125W F TC=0±100	24546	C4-1/8-TO-2741-F
A3R71	0684-5621	1		RESISTOR 5 6K 10% 25W FC TC= 400/+700	01121	CB5621
A3R72	0684-5601	7		RESISTOR 56 10% 25W FC TC=-400/+500	01121	CB5601
A3R73	0684-5601	7		RESISTOR 56 10% 25W FC TC=-400/+500	01121	CB5601
A3R74	0698-3153	9	2	RESISTOR 3 83K 1% 125W F TC=0+100	24546	C4-1/8-TO-3831-F
A3R75	0698 3153	9		RESISTOR 3 83K 1% 125W F TC=0+100	24546	C4-1/8-TO-3831-F
A3R76	0684-1841	9	1	RESISTOR 180K 10% 25W FC TC -800/+900	01121	CB1841
A3R77	0684 5601	7		RESISTOR 56 10% 25W FC TC= -400/+500	01121	CB5601
A3R78	0684 1051	3	1	RESISTOR 1M 10% 25W FC TC -800/+900	01121	CB1051
A3R79	0684-2231	3	1	RESISTOR 22K 10% 25W FC TC=-400/+800	01121	CB2231
A3R80	0684-1531	4		RESISTOR 15K 10% 25W FC TC -400/+800	01121	CB1531

See introduction to this section for ordering information

Table 6-2. Replaceable Parts (Cont'd)

Reference Designator	HP Part Number	C D	Qty	Description	Mfr Code	Mfr Part Number
A3R81	0684-5601	7		RESISTOR 56 10% 25W FC TC= 400/+500	01121	CB5601
A3R82	0757-0284	7	2	RESISTOR 150 1% 125W F TC -0±100	24546	C4-1/8-TO-151-F
A3R83	0757-0469	0	1	RESISTOR 150K 1% 125W F TC=0±100	24546	C4-1/8-TO-1503-F
A3R84	0757-0284	7		RESISTOR 150 1% 125W F TC -0±100	24546	C4-1/8-TO-151-F
A3R85	0684 5601	7		RESISTOR 56 10% 25W FC TC=-400/+500	01121	CB5601
A3R86	0757 0407	6	1	RESISTOR 200 1% 125W F TC=0±100	24546	C4-1/8-TO-201-F
A3R87	0757 0280	3		RESISTOR 1K 1% 125W F TC -0±100	24546	C4-1/8-TO-1001-F
A3R88	0698-0084	9		RESISTOR 2 15K 1% 125W F TC=0±100	24546	C4-1/8-TO-2151 F
A3R89	0684 5601	7		RESISTOR 56 10% 25W FC TC=-400/+500	01121	CB5601
A3R90	0684-5601	7		RESISTOR 56 10% 25W FC TC= 400/+500	01121	CB5601
A3R91	0757-0441	8	1	RESISTOR 8 25K 1% 125W F TC-0+100	24546	C4-1/8-TO-8251-F
A3S1	3101 0973	5	1	SWITCH-SL DPDT MINTR 5A 125VAC/DC PC	28480	3101-0973
A3U1	1820 0352	6	1	TRANSISTOR ARRAY	02735	CA3018
A3U2	1858 0040	8	1	TRANSISTOR ARRAY	02735	CA3127E
A3XU1	1200-0607	0	1	SOCKET-IC 16-CONT DIP DIP-SLDR	28480	1200-0607
A3VR1	1902-3139	7	1	DIODE-ZNR 8 25V 5% DO-7 PD 4W TC=+ 053%	28480	1902-3139

See introduction to this section for ordering information

Table 6-2. Replaceable Parts (Cont'd)

Reference Designator	HP Part Number	C D	Qty	Description	Mfr Code	Mfr Part Number
A4	01310-66530	2	1	PC BOARD ASSEMBLY-OUTPUT AMPLIFIER	28480	01310-66530
A4C1	0160-3451	1	8	CAPACITOR-FXD 01μF +80-20% 100VDC CER	28480	0160-3451
A4C2	0160-3451	1		CAPACITOR-FXD 01μF +80-20% 100VDC CER	28480	0160-3451
A4C3	0160-2150	5	2	CAPACITOR-FXD 33PF ±5% 300VDC MICA	28480	0160-2150
A4C4	0160-3451	1		CAPACITOR-FXD 01μF +80-20% 100VDC CER	28480	0160-3451
A4C5	0160-3451	1		CAPACITOR-FXD 01μF +80-20% 100VDC CER	28480	0160-3451
A4C6	0170-0063	6	2	CAPACITOR-FXD 02μF ±10% 400VDC POLYE	84411	663UW20394
A4C7	0160-3451	1		CAPACITOR-FXD 01μF +80-20% 100VDC CER	28480	0160-3451
A4C8	0121-0407	9	2	CAPACITOR-V TRMR-PSTN 7-3PF 600V	72982	536-016
A4C9	0170-0022	7	3	CAPACITOR-FXD 1μF ±20% 600VDC POLYE	28480	0170-0022
A4C10				NOT ASSIGNED		
A4C11	0160-2150	5		CAPACITOR-FXD 33PF ±5% 300VDC MICA	28480	0160-2150
A4C12	0121-0407	9		CAPACITOR-V TRMR-PSTN 7-3PF 600V	72982	536-016
A4C13	0160-3451	1		CAPACITOR-FXD 01μF +80-20% 100VDC CER	28480	0160-3451
A4C14	0160-3451	1		CAPACITOR-FXD 01μF +80-20% 100VDC CER	28480	0160-3451
A4C15	0170-0063	6		CAPACITOR-FXD 02μF ±10% 400VDC POLYE	84411	663UW20394
A4C16	0160-3451	1		CAPACITOR-FXD 01μF +80-20% 100VDC CER	28480	0160-3451
A4C17	0121-0474	0	1	CAPACITOR-V TRMR-PSTN 0 25-1 5PF 600V	28480	0121-0474
A4C18	0170-0022	7		CAPACITOR-FXD 1μF ±20% 600VDC POLYE	28480	0170-0022
A4C19	0170-0022	7		CAPACITOR-FXD 1μF ±20% 600VDC POLYE	28480	0170-0022
A4C20	0180-0374	3	2	CAPACITOR-FXD 10μF ±10% 20VDC TA	56289	150D106X9020B2
A4C21	0180-0374	3		CAPACITOR-FXD 10μF ±10% 20VDC TA	56289	150D106X9020B2
A4C22	0160-3443	1	2	CAPACITOR-FXD 1μF +80-20% 50VDC CER	28480	0160-3443
A4C23	0160-3443	1		CAPACITOR-FXD 1μF +80-20% 50VDC CER	28480	0160-3443
A4CR1	1901-0033	2	4	DIODE-GEN PRP 180V 200MA DO-7	28480	1901-0033
A4CR2	1901-0033	2		DIODE-GEN PRP 180V 200MA DO-7	28480	1901-0033
A4CR3	1901-0033	2		DIODE GEN PRP 180V 200MA DO-7	28480	1901-0033
A4CR4	1901-0033	2		DIODE-GEN PRP 180V 200MA DO-7	28480	1901-0033
A4CR5	1901-0040	1	12	DIODE-SWITCHING 30V 50MA 2NS DO-35	28480	1901-0040
A4CR6	1901-0040	1		DIODE-SWITCHING 30V 50MA 2NS DO-35	28480	1901-0040
A4CR7	1901-0040	1		DIODE-SWITCHING 30V 50MA 2NS DO-35	28480	1901-0040
A4CR8	1901-0040	1		DIODE-SWITCHING 30V 50MA 2NS DO-35	28480	1901-0040
A4CR9	1901-0040	1		DIODE-SWITCHING 30V 50MA 2NS DO-35	28480	1901-0040
A4CR10	1901-0040	1		DIODE-SWITCHING 30V 50MA 2NS DO-35	28480	1901-0040
A4CR11	1901-0040	1		DIODE-SWITCHING 30V 50MA 2NS DO-35	28480	1901-0040
A4CR12	1901-0040	1		DIODE-SWITCHING 30V 50MA 2NS DO-35	28480	1901-0040
A4CR13	1901-0040	1		DIODE-SWITCHING 30V 50MA 2NS DO-35	28480	1901-0040
A4CR14	1901-0040	1		DIODE-SWITCHING 30V 50MA 2NS DO-35	28480	1901-0040
A4CR15	1901-0040	1		DIODE-SWITCHING 30V 50MA 2NS DO-35	28480	1901-0040
A4CR16	1901-0040	1		DIODE-SWITCHING 30V 50MA 2NS DO-35	28480	1901-0040
A4Q1	1853-0036	2	4	TRANSISTOR PNP SI PD=310MW FT -250MHZ	28480	1853-0036
A4Q2	1853-0036	2		TRANSISTOR PNP SI PD=310MW FT=250MHZ	28480	1853-0036
A4Q3				NOT ASSIGNED		
A4Q4	1853-0036	2		TRANSISTOR PNP SI PD=310MW FT=250MHZ	28480	1853-0036
A4Q5	1854-0215	1	2	TRANSISTOR NPN SI PD=350MW FT=300MHZ	04713	2N3904
A4Q6	1853-0038	4	4	TRANSISTOR PNP SI TO-39 PD=1W FT=100MHZ	28480	1853-0038
A4Q7	1853-0038	4		TRANSISTOR PNP SI TO-39 PD=1W FT=100MHZ	28480	1853-0038
A4Q8	1854-0271	9	2	TRANSISTOR NPN SI TO-39 PD=1W FT=150MHZ	28480	1854-0271
A4Q9	1854-0523	4	2	TRANSISTOR NPN SI TO-39 PD=1W FT=150MHZ	28480	1854-0523
A4Q10	1854-0215	1		TRANSISTOR NPN SI PD=350MW FT=300MHZ	04713	2N3904
A4Q11	1853-0036	2		TRANSISTOR PNP SI PD=310MW FT=250MHZ	28480	1853-0036
A4Q12	1854-0271	9		TRANSISTOR NPN SI TO-39 PD=1W FT=150MHZ	28480	1854-0271
A4Q13	1854-0523	4		TRANSISTOR NPN SI TO-39 PD=1W FT=150MHZ	28480	1854-0523
A4Q14	1853-0038	4		TRANSISTOR PNP SI TO-39 PD=1W FT=100MHZ	28480	1853-0038
A4Q15	1853-0038	4		TRANSISTOR PNP SI TO-39 PD=1W FT=100MHZ	28480	1853-0038
A4R1	0684-4701	6	4	RESISTOR 47 10% 25W FC TC=-400/+500	01121	CB4701
A4R2	0684-4701	6		RESISTOR 47 10% 25W FC TC=-400/+500	01121	CB4701
A4R3	0684-5601	7	2	RESISTOR 56 10% 25W FC TC=-400/+500	01121	CB5601
A4R4	0684-5601	7		RESISTOR 56 10% 25W FC TC=-400/+500	01121	CB5601
A4R5	0698-3153	9	1	RESISTOR 3 83K 1% 125W F TC=0±100	24546	C4-1/8-TO-3831-F
A4R6	0757-0280	3	1	RESISTOR 1K 1% 125W F TC=0±100	24546	C4 1 8 TO-1001 F
A4R7	0698-0085	0	2	RESISTOR 2 61K 1% 125W F TC=0±100	24546	C4 1 8 TO 2611 F
A4R8	0757-0278	9	2	RESISTOR 1 78K 1% 125W F TC 0±100	24546	C4 1 8 TO 1781 F
A4R9	0698-3159	5	2	RESISTOR 26 1K 1% 125W F TC=0+100	24546	C4 1 8 TO-2612 F
A4R10	0684-1811	3	5	RESISTOR 180 10% 25W FC TC=-400/+600	01121	CB1811
A4R11	0684-2711	4	2	RESISTOR 270 10% 25W FC TC=-400/+600	01121	CB2711
A4R12	0698-0085	0		RESISTOR 2 61K 1% 125W F TC=0±100	24546	C4-1/8-TO-2611-F
A4R13	0757-0278	9		RESISTOR 1 78K 1% 125W F TC=0+100	24546	C4-1/8-TO-1781-F
A4R14	0698-3159	5		RESISTOR 26 1K 1% 125W F TC=0+100	24546	C4-1/8-TO-2612-F
A4R15	0684-2711	4		RESISTOR 270 10% 25W FC TC=-400/+600	01121	CB2711
A4R16	0684-1811	3		RESISTOR 180 10% 25W FC TC=-400/+600	01121	CB1811
A4R17	0684-1001	3	2	RESISTOR 10 10% 25W FC TC=-400/+500	01121	CB1001
A4R18	0698-3655	6	2	RESISTOR 56K 5% 2W MO TC=0±200	27167	FP42-2-TOO-5602-J
A4R19	0698-3155	1	2	RESISTOR 4 64K 1% 125W F TC=0±100	24546	C4-1/8-TO-4641-F
A4R20	0757-0159	5	2	RESISTOR 1K 1% 5W F TC=0±100	28480	0757-0159

See introduction to this section for ordering information

Table 6-2. Replaceable Parts (Cont'd)

Reference Designator	HP Part Number	C D	Qty	Description	Mfr Code	Mfr Part Number
A4R21	0764 0021	5	4	RESISTOR 9 1K 5% 2W MO TC=0+200	28480	0764-0021
A4R22	0764 0021	5		RESISTOR 9 1K 5% 2W MO TC=0+200	28480	0764 0021
A4R23	0684 1021	7	2	RESISTOR 1K 10% 25W FC TC= 400/+600	01121	CB1021
A4R24	2100 2692	6	1	RESISTOR TRMR 1M 20% C SIDE ADJ 1-TRN	30983	ET50X105
A4R25	0757 0438	3	2	RESISTOR 5 11K 1% 125W F TC=0+100	24546	C4 1/8-TO-5111-F
A4R26	0684 4701	6		RESISTOR 47 10% 25W FC TC= 400 +500	01121	CB4701
A4R27	0761 0076	4	2	RESISTOR 18K 5% 1W MO TC=0+200	28480	0761-0076
A4R28	0761 0074	2	2	RESISTOR 15K 5% 1W MO TC 0±200	28480	0761-0074
A4R29	0698 3646	5	4	RESISTOR 12K 5% 2W MO TC=0±200	27167	FP42-2-TOO-1202-J
A4R30	0698 3646	5		RESISTOR 12K 5% 2W MO TC=0+200	27167	FP42-2-TOO-1202-J
A4R31	0757 0480	5	1	RESISTOR 432K 1% 125W F TC=0+100	19701	MF4C1/8-TO-4323 F
A4R32	0698 3646	5		RESISTOR 12K 5% 2W MO TC 0±200	27167	FP42-2-TOO-1202 J
A4R33	0684 1811	3		RESISTOR 180 10% 25W FC TC= 400/+600	01121	CB1811
A4R34	0698 3646	5		RESISTOR 12K 5% 2W MO TC=0+200	27167	FP42-2-TOO-1202-J
A4R35	0757-0438	3		RESISTOR 5 11K 1% 125W F TC 0+100	24546	C4 1/8-TO-5111-F
A4R36	0684 4701	6		RESISTOR 47 10% 25W FC TC 400/+500	01121	CB4701
A4R37	0684 1001	3		RESISTOR 10 10% 25W FC TC= 400/+500	01121	CB1001
A4R38	0698 3655	6		RESISTOR 56K 5% 2W MO TC 0±200	27167	FP42-2-TOO-5602-J
A4R39	0684 1811	3		RESISTOR 180 10% 25W FC TC 400/+600	01121	CB1811
A4R40	0698 3155	1		RESISTOR 4 64K 1% 125W F TC=0+100	24546	C4-1/8-TO 4641-F
A4R41	0757-0159	5		RESISTOR 1K 1% 5W F TC=0±100	28480	0757-0159
A4R42	0761 0074	2		RESISTOR 15K 5% 1W MO TC=0+200	28480	0761-0074
A4R43	0761 0076	4		RESISTOR 18K 5% 1W MO TC=0+200	28480	0761-0076
A4R44	0764 0021	5		RESISTOR 9 1K 5% 2W MO TC=0+200	28480	0764-0021
A4R45	0764 0021	5		RESISTOR 9 1K 5% 2W MO TC 0±200	28480	0764-0021
A4R46	0684 1021	7		RESISTOR 1K 10% 25W FC TC= 400/+600	01121	CB1021
A4R47	0684-1811	3		RESISTOR 180 10% 25W FC TC= 400/+600	01121	CB1811
				MISCELLANEOUS PARTS		
	1200-0185	9	8	INSULATOR XSTR NYLON	28480	1200-0185
	1205-0073	4	8	HEAT SINK TO-5/TO-39-CS	28480	1205-0073

See introduction to this section for ordering information

Table 6-2. Replaceable Parts (Cont'd)

Reference Designator	HP Part Number	C D	Qty	Description	Mfr Code	Mfr Part Number
A5	01311-66507	4	1	Z-AXIS BOARD ASSEMBLY	28480	01311-66505
A5C1	0160-2055	9	4	CAPACITOR-FXD 01UF +80-20% 100VDC CER	28480	0160-2055
A5C2	0160-2055	9		CAPACITOR-FXD 01UF +80-20% 100VDC CER	28480	0160-2055
A5C3	0160-3443	1	9	CAPACITOR-FXD 1UF +80-20% 50VDC CER	28480	0160-3443
A5C4	0160-2055	9		CAPACITOR-FXD 01UF +80-20% 100VDC CER	28480	0160-2055
A5C5	0140-0193	0	1	CAPACITOR-FXD 82PF ±5% 200VDC MICA	28480	0140-0193
A5C6	0121-0474	0	1	CAPACITOR-VAR 3-1 5PF 600VDC	28480	0121-0474
A5C7	0160-3453	6	2	CAPACITOR-FXD 05UF +80-20% 100VDC CER	28480	0160-3453
A5C8	0160-3453	6		CAPACITOR-FXD 05UF +80-20% 100VDC CER	28480	0160-3453
A5C9	0160-4908	5	3	CAPACITOR-FXD 68UF ±10% 250VDC	28480	0160-4908
A5C10	0160-4908	5		CAPACITOR-FXD 68UF ±10% 250VDC	28480	0160-4908
A5C11	0160-4908	5		CAPACITOR-FXD 68UF ±10% 250VDC	28480	0160-4908
A5C12	0160-3960	7	1	CAPACITOR-FXD 1000PF ±20% 8KVDC	28480	0160-3960
A5C13	0160-2055	9		CAPACITOR-FXD 01UF +80-20% 100VDC CER	28480	0160 2055
A5C14	0160-3443	1		CAPACITOR-FXD 1UF +80-20% 50VDC CER	28480	0160-3443
A5C15	0180-0374	3	2	CAPACITOR-FXD 10UF ±10% 20VDC TA	56289	150D106X9020B2
A5C16	0180-0374	3		CAPACITOR-FXD 10UF ±10% 20VDC TA	56289	150D106X9020B2
A5C17	0160-3443	1		CAPACITOR-FXD 1UF +80-20% 50VDC CER	28480	0160-3443
A5C18	0160-3443	1		CAPACITOR-FXD 1UF +80-20% 50VDC CER	28480	0160-3443
A5C19	0160-3508	9	2	CAPACITOR-FXD 1UF +80-20% 50VDC CER	28480	0160-3508
A5C20	0160-3443	1		CAPACITOR-FXD 1UF +80-20% 50VDC CER	28480	0160-3443
A5C21	0160-3508	9		CAPACITOR-FXD 1UF +80-20% 50VDC CER	28480	0160-3508
A5C22	0160-3443	1		CAPACITOR-FXD 1UF +80-20% 50VDC CER	28480	0160-3443
A5C23	0160-3443	1		CAPACITOR-FXD 1UF +80-20% 50VDC CER	28480	0160-3443
A5C24	0160-3443	1		CAPACITOR-FXD 1UF +80-20% 50VDC CER	28480	0160-3443
A5C25	0160-3443	1	1	CAPACITOR-FXD 1UF +80-20% 50VDC CER	28480	1906-3443
A5C26	0160-3451	1		CAPACITOR-FXD .01UF +80-20% 100VDC CER	28480	0160-3451
A5CR1	1901-0376	6	4	DIODE-GEN PRP 35V 50MA DO-35	28480	1901-0376
A5CR2	1901-0376	6		DIODE-GEN PRP 35V 50MA DO-35	28480	1901-0376
A5CR3	1901-0376	6		DIODE-GEN PRP 35V 50MA DO-35	28480	1901-0376
A5CR4	1901-0376	6		DIODE-GEN PRP 35V 50MA DO-35	28480	1901-0376
A5CR5	1906-0042	3	1	DIODE-DUAL 70V VF DIFF=10MV	28480	1906-0042
A5CR6	1901-0040	1	5	DIODE-SWITCHING 30V 50MA 2NS DO-35	28480	1901-0040
A5CR7	1901-0028	5	3	DIODE-PWR RECT 400V 750MA DO-29	28480	1901-0028
A5CR8	1901-0096	7	1	DIODE-SWITCHING 120V 50MA 100NS	28480	1901-0096
A5CR9	1901-0040	1		DIODE-SWITCHING 30V 50MA 2NS DO-35	28480	1901-0040
A5CR10	1901-0040	1		DIODE-SWITCHING 30V 50MA 2NS DO-35	28480	1901-0040
A5CR11	1901-0040	1		DIODE-SWITCHING 30V 50MA 2NS DO-35	28480	1901-0040
A5CR12	1901-0040	1		DIODE-SWITCHING 30V 50MA 2NS DO-35	28480	1901-0040
A5CR13	1901-0028	5		DIODE-PWR RECT 400V 750MA DO-29	28480	1901-0028
A5CR14	1901-0028	5		DIODE-PWR RECT 400V 750MA DO-29	28480	1901-0028
A5J1	1251-6146	1	1	CONNECTOR 4-PIN M METRIC POST TYPE	28480	1251-6146
A5L1	9100-2251	0	1	INDUCTOR RF-CH-MLD 22UH 10% 105DX 26LG	28480	9100-2251
A5L2	9140-0210	1	2	COIL-MLD 100UH 5% Q=50 155DX 375LG-NOM	28480	9140-0210
A5L3	9140-0210	1		COIL-MLD 100UH 5% Q=50 155DX 375LG-NOM	28480	9140-0210
A5MP1	01300-21103	9	1	HEAT SINK-BASE	28480	01300-21103
A5MP2	01300-21102	8	1	HEAT SINK-CLAMP	28480	01300-21102
A5MP3	2200-0101	0	3	SCREW-MACH 4-40 188-IN-LG PAN-HD-POZI	28480	2200-0101
A5Q1	1855-0262	0	1	TRANSISTOR-JFET DUAL N-CHAN D-MODE SI	28480	1855-0262
A5Q2	1854-0215	1	3	TRANSISTOR NPN SI PD=350MW FT=300MHZ	04713	2N3904
A5Q3	1853-0036	2	3	TRANSISTOR PNP SI PD=310MW FT=250MHZ	28480	1853-0036
A5Q4	1853-0038	4	1	TRANSISTOR PNP SI TO-39 PD=1W FT=100MHZ	28480	1853-0038
A5Q5	1854-0419	7	2	TRANSISTOR NPN SI TO-39 PD=1W FT=200MHZ	28480	1854-0419
A5Q6	1853-0036	2		TRANSISTOR PNP SI PD=310MW FT=250MHZ	28480	1853-0036
A5Q7	1854-0215	1		TRANSISTOR NPN SI PD=350MW FT=300MHZ	04713	2N3904
A5Q8	1853-0036	2		TRANSISTOR PNP SI PD=310MW FT=250MHZ	28480	1853-0036
A5Q9	1854-0215	1		TRANSISTOR NPN SI PD=350MW FT=300MHZ	04713	2N3904
A5Q10	1854-0419	7		TRANSISTOR NPN SI TO-39 PD=1W FT=200MHZ	28480	1853-0419
A5R1	0757-1000	7	1	RESISTOR 51 1 1% 5W f TC=0±100	28480	0757-1000
A5R2	0757-0465	6	3	RESISTOR 100K 1% 125W F TC=0±100	24546	C4-1/8-T0-1003-F
A5R3	0757-0442	9	6	RESISTOR 10K 1% 125W F TC=0±100	24546	C4-1/8-T0-1002-F
A5R4	0757-0442	9		RESISTOR 10K 1% 125W F TC=0±100	24546	C4-1/8-T0-1002-F
A5R5	0757-0465	6		RESISTOR 100K 1% 125W F TC=0±100	24546	C4-1/8-T0-1003-F
A5R6	0757-0394	0	9	RESISTOR 51 1 1% 125W F TC=0±100	24546	C4-1/8-T0-51R1-F
A5R7	0757-0394	0		RESISTOR 51 1 1% 125W F TC=0±100	24546	C4-1/8-T0-51R1-F
A5R8	0757-0442	9		RESISTOR 10K 1% 125W F TC=0±100	24546	C4-1/8-T0-1002-F
A5R9	0757-0442	9		RESISTOR 10K 1% 125W F TC=0±100	24546	C4-1/8-T0-1002-F
A5R10	0757-0394	0		RESISTOR 51 1 1% 125W F TC=0±100	24546	C4-1/8-T0-51R1-F
A5R11	0757-0394	0		RESISTOR 51.1 1% .125W TC=0±100	24546	C4-1/8-T0-51R1-F
A5R12	0698-3157	3	1	RESISTOR 19.6K 1% .125W F TC=0±100	24546	C4-1/8-T0-1962-F
A5R13	0757-0440	7	3	RESISTOR 7 5K 1% 125W F TC=0±100	24546	C4-1/8-T0-7501-F
A5R14	0757-0440	7		RESISTOR 7 5K 1% 125W F TC=0±100	24546	C4-1/8-T0-7501-F
A5R15	0757-0447	4	1	RESISTOR 16 2K 1% 125W F TC=0±100	24546	C4-1/8-T0-1622-F

See introduction to this section for ordering information

Table 6-2. Replaceable Parts (Cont'd)

Reference Designator	HP Part Number	C D	Qty	Description	Mfr Code	Mfr Part Number
A5R16	2100-3273	1	1	RESISTOR-TRMR 2K 10% C SIDE-ADJ 1-TRN	28480	2100-3273
A5R17	2100-3207	1	1	RESISTOR-TRMR 5K 10% C SIDE-ADJ 1-TRN	28480	2100-3207
A5R18	0757-0280	3	1	RESISTOR 1K 1% .125W F TC=0±100	24546	C4-1/8-TO-1001-F
A5R19	2100-3274	2	1	RESISTOR-TRMR 10K 10% C SIDE-ADJ 1-TRN	28480	2100-3274
A5R20	0757-0461	2	1	RESISTOR 68 1K 1% .125W F TC=0±100	24546	C4-1/8-T0-6812-F
A5R21	2100-2520	8	1	RESISTOR-TRMR 50 20% C SIDE-ADJ 1 TRN	28480	2100-2520
A5R22	0698-3443	0	1	RESISTOR 287 1% .125W F TC=0±100	24546	C4-1/8-TO-287R-F
A5R23	0757-0411	2	1	RESISTOR 332 1% .125W F TC=0±100	24546	C4-1/8-TO-332R-F
A5R24	0757-0428	1	1	RESISTOR 1.62K 1% .125W F TC=0±100	24546	C4-1/8-TO-1621-F
A5R25	0757-0438	3	11	RESISTOR 5.11K 1% .125W F TC=0±100	24546	C4-1/8-TO-5111-F
A5R26	0757-0438	3		RESISTOR 5.11K 1% .125W F TC=0±100	24546	C4-1/8-TO-5111-F
A5R27	0757-0408	7	2	RESISTOR 243 1% .125W F TC=0±100	24546	C4-1/8-TO-243R-F
A5R28	0757-0427	0	3	RESISTOR 1.5K 1% .125W F TC=0±100	24546	C4-1/8-TO-1501-F
A5R29	0757-0427	0		RESISTOR 1.5K 1% .125W F TC=0±100	24546	C4-1/8-TO-1501-F
A5R30	0757-0408	7		RESISTOR 243 1% .125W F TC=0±100	24546	C4-1/8-TO-243-F
A5R31	0757-0413	4	3	RESISTOR 392 1% .125W F TC=0±100	24546	C4-1/8-TO-392R-F
A5R32	0757-0438	3	10	RESISTOR 5.11K 1% .125W F TC=0±100	24546	C4-1/8-TO-5111-F
A5R33	0757-0420	3	2	RESISTOR 750 1% .125W F TC=0±100	24546	C4-1/8-TO-750R-F
A5R34	0757-0420	3		RESISTOR 750 1% .125W F TC=0±100	24546	C4-1/8-TO-750R-F
A5R35	0757-0394	0		RESISTOR 51.1 1% .125W F TC=0±100	24546	C4-1/8-TO-51R1-F
A5R36	0757-0394	0		RESISTOR 51.1 1% 125W F TC=0±100	24546	C4-1/8-TO-51R1-F
A5R37	0757-0415	6	1	RESISTOR 475 1% .125W F TC=0±100	24546	C4-1/8-TO-475R-F
A5R38	0757-0413	4		RESISTOR 392 1% 125W F TC=0±100	24546	C4-1/8-TO-392R-F
A5R39	0757-0413	4		RESISTOR 392 1% .125W F TC=0±100	24546	C4-1/8-TO-392R-F
A5R40	0757-0436	1	1	RESISTOR 4.32K 1% .125W F TC=0±100	24546	C4-1/8-TO-5621-F
A5R41	0757-0290	5		RESISTOR 6 19K 1% 125W F TC=0±100	19701	MF4C1/8-TO-6191-F
A5R42	0757-0446	3	2	RESISTOR 15K 1% .125W F TC=0±100	24546	C4-1/8-TO-1502-F
A5R43	0757-0431	6	1	RESISTOR 2.43K 1% .125W F TC=0±100	24546	C4-1/8-TO-2431-F
A5R44	0757-0407	6	2	RESISTOR 200 1% .125W F TC=0±100	24546	C4-1/8-TO-201-F
A5R45	2100-1788	9	1	RESISTOR-TRMR 500 10% C TOP-ADJ 1-TURN	28480	2100-1788
A5R46	0698-7096	7	1	RESISTOR 10 10% .125W F TC=120/+400	28480	0698-7096
A5R47	0757-0438	3		RESISTOR 5.11K 1% .125W F TC=0±100	24546	C4-1/8-TO-5111-F
A5R48	0757-0438	3		RESISTOR 5.11K 1% .125W F TC=0±100	24546	C4-1/8-TO-5111-F
A5R49	0698-3447	4		RESISTOR 422 1% .125W F TC=0±100	24546	C4-1/8-TO-422R-F
A5R50	0757-0456	5	1	RESISTOR 43.2K 1% .125W F TC=0±100	24546	C4-1/8-TO-4322-F
A5R51	0757-0394	0		RESISTOR 51 1 1% 125W F TC=0+100	24546	C4-1/8-T0-51R1-F
A5R52	0757-0394	0		RESISTOR 51 1 1% 125W F TC=0+100	24546	C4 1/8-TO-51R1-F
A5R53	2100-3351	6	1	RESISTOR-TRMR 500 10% C SIDE-ADJ 1-TRN	28480	2100-3351
A5R54	0757-0442	9		RESISTOR 10K 1% 125W F TC=0±100	28480	0757-0442
A5R55	0761-0039	9	1	RESISTOR 680 5% 1W MO TC=0+200	28480	0761-0039
A5R56	0761-0070	8	1	RESISTOR 8 2K 5% 1W MO TC=0±200	28480	0761-0070
A5R57	0684-4701	6	1	RESISTOR 47 OHM 10% 25W FC TC=-400/+500	01121	CB4701
A5R58	0687-4721	6	1	RESISTOR 4 7K 10% 5W CC TC=0+647	01121	EB4721
A5R59	0687-1051	9	1	RESISTOR 1M 5% 5W CC TC=0+1000	01121	EB1051
A5R60	0683 1015	7	1	RESISTOR 100 OHM 10% 25W FC TC=-400/+500	01121	CB1015
A5R61				NOT ASSIGNED		
A5R62	0757-0274	5		RESISTOR 1 21K 1% 125W F TC=0±100	24546	C4-1/8-T0-1213-F
A5R63	0757-0407	6		RESISTOR 200 1% 125W F TC=0±100	24546	C4-1/8-T0-201-F
A5R64	0757-0458	7	1	RESISTOR 51 1K 1% 125W F TC=0+100	24546	C4-1/8-T0-5112-F
A5R65	0757-0283	6		RESISTOR 2K 1% 125W F TC=0±100	24546	C4-1/8-T0-2001-F
A5R66	0757-0465	6		RESISTOR 100K 1% 125W F TC=0±100	24546	C4-1/8-T0-1003-F
A5R67	0757-0472	5	2	RESISTOR 200K 1% 125W F TC=0±100	24546	C4-1/8-T0-2003-F
A5R68	0757-0274	5		RESISTOR 1 21K 1% 125W F TC=0±100	24546	C4-1/8-T0-1213-F
A5R69	0757-0469	0	1	RESISTOR 150K 1% 125W F TC=0±100	24546	C4-1/8-T0-1503-F
A5R70	0757-0472	5		RESISTOR 200K 1% 125W F TC=0±100	24546	C4-1/8-T0-2003-F
A5R71	0757-0482	7	2	RESISTOR 511K 1% 125W F TC=0±100	28480	0757-0482
A5R72	0698-3451	0	1	RESISTOR 133K 1% 125W F TC=0±100	24546	C4 1/8-T0-1333-F
A5R73	0757-0459	8		RESISTOR 56 2K 1% 125W F TC=0+100	24546	C4-1/8-T0-5622-F
A5R74	0698-3449	6	1	RESISTOR 28 7K 1% 125W F TC=0+100	24546	C4-1/8-T0-2872-F
A5R75	0757-0446	3		RESISTOR 15K 1% 125W F TC=0±100	24546	C4-1/8-T0-1502-F
A5R76	0757-0288	1		RESISTOR 9 09K 1% 125W F TC=0±100	19701	MF4C1/8-T0 9091-F
A5R77	0757-0438	3		RESISTOR 5 11K 1% 125W F TC=0±100	24546	C4-1/8-T0-5111-F
A5R78	0757-0482	7		RESISTOR 511K 1% 125W F TC=0+100	28480	0757-0482
A5R79	0757-0442	9		RESISTOR 10K 1% 125W F TC=0+100	24546	C4 1/8-T0-1002-F
A5R80	0698-3152	8	1	RESISTOR 3 48K 1% 125W F TC=0+100	24546	C4-1/8-T0-3481-F
A5R81	0757-0409	8	1	RESISTOR 274 1% 125W F TC=0±100	24546	C4-1/8-T0-274R-F
A5R82	0757-0416	7	2	RESISTOR 511 1% 125W F TC=0±100	24546	C4-1/8-T0-511R-F
A5R83	0757-0416	7		RESISTOR 511 1% 125W F TC=0±100	24546	C4-1/8-T0-511R-F
A5R84	0757-0273	4	1	RESISTOR 3 01K 1% 125W F TC=0±100	24546	C4-1/8-T0-3011-F
A5R85	0757-0394	0		RESISTOR 51 1 1% 125W F TC=0±100	24546	C4-1/8-T0-51R1-F
A5R86	0757-0438	3		RESISTOR 5 11K 1% 125W F TC=0+100	24546	C4-1/8-T0-5111-F
A5R87	0757-0438	3		RESISTOR 5 11K 1% 125W F TC=0±100	24546	C4-1/8-T0-5111-F
A5R88	0757-0438	3		RESISTOR 5 11K 1% 125W F TC=0±100	24546	C4-1/8-T0-5111-F
A5R89	0757-0401	0	2	RESISTOR 100 1% .125W F TC=0±100	24546	C4-1/8-TO-100R-F
A5R90	0757-0401	0		RESISTOR 100 1% 125W F TC=0±100	24546	C4-1/8-TO-100R-F
A5R91	0757-0438	3		RESISTOR 5 11K 1% 125W F TC=0+100	24546	C4-1/8-T0-5111-F

See introduction to this section for ordering information

Table 6-2. Replaceable Parts (Cont'd)

Reference Designator	HP Part Number	C D	Qty	Description	Mfr Code	Mfr Part Number
A5R92	0757-0438	3		RESISTOR 5 11K 1% 125W F TC=0±100	24546	C4-1/8-T0-5111-F
A5R93	0687-2211	5	1	RESISTOR 220 10% 5W CC TC=0+529	01121	EB2211
A5R94	0687-1021	3	1	RESISTOR 1K 10% 5W CC TC=0+529	01121	EB1021
A5R95	0757-0427	0		RESISTOR 1 5K 1% 125W F TC=0±100	24546	C4-1/8-T0-1501-F
A5S1	3101-2348	2	1	SWITCH-SL SPDT SUBMIN 02A 20VDC PC	28480	3101-2348
A5U1	1826-0023	0	1	IC MODULATOR 14 DIP-C	04713	MC1496L
A5U2	1858-0058	8	1	TRANSISTOR ARRAY 14-PIN PLSTC TO-116	04713	MPQ3906
A5U3	1821-0001	4	2	TRANSISTOR ARRAY 14-PIN PLSTC DIP	04713	MC3346P
A5U4	1820-1427	8	1	IC DCDR TTL LS 2-TO-4 LINE DUAL 2-INP	01295	SN74LS156N
A5U5	1821-0001	4		TRANSISTOR ARRAY 14-PIN PLSTC DIP	04713	MC3346P
A5U6	1820-0681	4	1	IC GATE TTL S NAND QUAD 2-INP	01295	SN74S00N
A5V1	2140-0008	8	6	LAMP-GLOW A1A 115/59VDC 500UA T-2-BULB	28480	2140-0008
A5V2	2140-0008	8		LAMP-GLOW A1A 115/59VDC 500UA T-2-BULB	28480	2140-0008
A5V3	2140-0008	8		LAMP-GLOW A1A 115/59VDC 500UA T-2-BULB	28480	2140-0008
A5V4	2140-0008	8		LAMP-GLOW A1A 115/59VDC 500UA T-2-BULB	28480	2140-0008
A5V5	2140-0008	8		LAMP-GLOW A1A 115/59VDC 500UA T-2-BULB	28480	2140-0008
A5V6	2140-0008	8		LAMP GLOW A1A 115/59VDC 500UA T-2-BULB	28480	2140-0008
A5VR1	1902-0048	1	1	DIODE-ZNR 6 81V 5% DO-35 PD= 4W	28480	1902-0048
A5VR2	1902-3149	9	1	DIODE-ZNR 9 09V 5% DO-7 PD= 4W TC=+ 053%	28480	1902-3149
A5VR3	1902-0184	6	1	DIODE ZNR 16 2V 5% DO-7 PD= 4W TC=+ 066%	28480	1902-0184
A5VR4	1902-0041	4	2	DIODE-ZNR 5 11V 5% DO-7 PD= 4W TC=- 009%	28480	1902-0041
A5VR5	1902-0041	4		DIODE-ZNR 5 11V 5% DO-7 PD= 4W TC=- 009%	28480	1902-0041
A5XU1	1200-0638	7	5	SOCKET-IC 14-CONT DIP DIP-SLDR	28480	1200-0638
A5XU2	1200-0638	7		SOCKET-IC 14-CONT DIP DIP-SLDR	28480	1200-0638
A5XU3	1200-0638	7		SOCKET-IC 14-CONT DIP DIP-SLDR	28480	1200-0638
A5XU4	1200-0607	0	1	SOCKET-IC 16-CONT DIP DIP-SLDR	28480	1200-0607
A5XU5	1200-0638	7		SOCKET-IC 14-CONT DIP DIP-SLDR	28480	1200-0638
A5XU6	1200-0638	7		SOCKET-IC 14-CONT DIP DIP-SLDR	28480	1200-0638
A5XU7	1200-0796	8	1	SOCKET-IC 8-CONT DIP DIP-SLDR	28480	1200-0796
				MISCELLANEOUS PARTS		
	1258-0124	7	2	SHUNT PROGRAMMABLE 1 DBL PIN SET, 100	28480	1258-0124

See introduction to this section for ordering information

Table 6-2. Replaceable Parts (Cont'd)

Reference Designator	HP Part Number	C D	Qty	Description	Mfr Code	Mfr Part Number
A6	01317 66501	4	1	PC BOARD ASSEMBLY-FOCUS	28480	01317-66501
A6C1	0160-3443	1	7	CAPACITOR-FXD 1μF +80-20% 50VDC CER	28480	0160-3443
A6C2	0140-0203	3	1	CAPACITOR-FXD 30PF ±5% 500VDC MICA	72136	DM15E300J0500WV1CR
A6C3	0160-4204	4	3	CAPACITOR-FXD .033μF ±10% 500VDC CER	28480	0160-4204
A6C4	0121 0474	0	1	CAPACITOR-V TRMR PSTN 3-1 5PF 600V	28480	0121-0474
A6C5	0170-0022	7	1	CAPACITOR-FXD 1μF ±20% 600VDC POLYE	28480	0170-0022
A6C6	0160-4204	4		CAPACITOR-FXD .033μF ±10% 500VDC CER	28480	0160-4204
A6C7	0160-5379	6	1	CAPACITOR-FXD 4700P ±20% 4K VDC CER	28480	0160-5379
A6C8	0180-0374	3	2	CAPACITOR-FXD 10μF ±10% 20VDC TA	56289	150D106X9020B2
A6C9	0160 3443	1		CAPACITOR-FXD 1μF +80-20% 50VDC CER	28480	0160-3443
A6C10	0160-3443	1		CAPACITOR-FXD 1μF +80-20% 50VDC CER	28480	0160-3443
A6C11	0160-3443	1		CAPACITOR-FXD 1μF +80-20% 50VDC CER	28480	0160-3443
A6C12	0160-3443	1		CAPACITOR-FXD 1μF +80-20% 50VDC CER	28480	0160-3443
A6C13	0180-0374	3		CAPACITOR-FXD 10μF ±10% 20VDC TA	56289	150D106X9020B2
A6C14	0160 0168	1	4	CAPACITOR-FXD 1μF ±10% 200VDC POLYE	28480	0160-0168
A6C15	0160-0168	1		CAPACITOR-FXD 1μF ±10% 200VDC POLYE	28480	0160-0168
A6C16	0160-0168	1		CAPACITOR-FXD 1μF ±10% 200VDC POLYE	28480	0160-0168
A6C17	0160-0168	1		CAPACITOR-FXD 1μF ±10% 200VDC POLYE	28480	0160-0168
A6C18	0160-2207	3	1	CAPACITOR-FXD 300PF ±5% 300VDC MICA	28480	2207
A6C19	0160-3443	1		CAPACITOR-FXD 1μF +80-20% 50VDC CER	28480	0160-3443
A6C20	0160-3443	1		CAPACITOR-FXD 1μF +80-20% 50VDC CER	28480	0160 3443
A6C21	0160 4204	4		CAPACITOR-FXD .033μF ±10% 500VDC CER	28480	0160 4204
A6C22	0140-0178	1	1	CAPACITOR-FXD 560PF ±2% 300VDC MICA	72136	DM15F561G0300WV1CR
A6CR1	1901-0040	1	24	DIODE-SWITCHING 30V 50MA 2NS DO-35	28480	1901-0040
A6CR2	1901 0040	1		DIODE-SWITCHING 30V 50MA 2NS DO-35	28480	1901-0040
A6CR3	1901-0040	1		DIODE-SWITCHING 30V 50MA 2NS DO-35	28480	1901 0040
A6CR4	1901-0040	1		DIODE-SWITCHING 30V 50MA 2NS DO-35	28480	1901-0040
A6CR5	1901-0040	1		DIODE-SWITCHING 30V 50MA 2NS DO-35	28480	1901-0040
A6CR6	1901 0040	1		DIODE-SWITCHING 30V 50MA 2NS DO-35	28480	1901-0040
A6CR7	1901 0040	1		DIODE SWITCHING 30V 50MA 2NS DO-35	28480	1901-0040
A6CR8	1901-0040	1		DIODE-SWITCHING 30V 50MA 2NS DO 35	28480	1901-0040
A6CR9	1901-0040	1		DIODE-SWITCHING 30V 50MA 2NS DO 35	28480	1901 0040
A6CR10	1901-0040	1		DIODE-SWITCHING 30V 50MA 2NS DO-35	28480	1901-0040
A6CR11	1901-0040	1		DIODE-SWITCHING 30V 50MA 2NS DO-35	28480	1901-0040
A6CR12	1901-0040	1		DIODE-SWITCHING 30V 50MA 2NS DO 35	28480	1901-0040
A6CR13	1901 0026	3	4	DIODE-PWR RECT 200V 750MA DO-29	28480	1901-0026
A6CR14	1901-0026	3		DIODE-PWR RECT 200V 750MA DO-29	28480	1901-0026
A6CR15	1901-0026	3		DIODE-PWR RECT 200V 750MA DO-29	28480	1901-0026
A6CR16	1901-0026	3		DIODE-PWR RECT 200V 750MA DO-29	28480	1901-0026
A6CR17	1901-0040	1		DIODE-SWITCHING 30V 50MA 2NS DO-35	28480	1901-0040
A6CR18	1901 0040	1		DIODE-SWITCHING 30V 50MA 2NS DO-35	28480	1901-0040
A6CR19	1901 0040	1		DIODE-SWITCHING 30V 50MA 2NS DO-35	28480	1901 0040
A6CR20	1901-0040	1		DIODE-SWITCHING 30V 50MA 2NS DO-35	28480	1901-0040
A6CR21	1901 0040	1		DIODE-SWITCHING 30V 50MA 2NS DO-35	28480	1901-0040
A6CR22	1901 0040	1		DIODE-SWITCHING 30V 50MA 2NS DO-35	28480	1901-0040
A6CR23	1901-0040	1		DIODE-SWITCHING 30V 50MA 2NS DO-35	28480	1901-0040
A6CR24	1901 0040	1		DIODE-SWITCHING 30V 50MA 2NS DO-35	28480	1901-0040
A6CR25	1901 0040	1		DIODE-SWITCHING 30V 50MA 2NS DO 35	28480	1901-0040
A6CR26	1901-0040	1		DIODE-SWITCHING 30V 50MA 2NS DO-35	28480	1901-0040
A6CR27	1901-0040	1		DIODE-SWITCHING 30V 50MA 2NS DO 35	28480	1901-0040
A6CR28	1901-0040	1		DIODE-SWITCHING 30V 50MA 2NS DO-35	28480	1901-0040
A6H1	2200-0103	2	3	SCREW-MACH 4-40 .25-IN-LG PAN-HD-POZI	00000	ORDER BY DESCRIPTION
A6L1	9100-2276	9	2	COIL-MLD 100μM 10% Q=50 095DX 25LG-NOM	28480	9100-2276
A6L2	9100 2276	9		COIL-MLD 100μM 10% Q=50 095DX 25LG-NOM	28480	9100 2276
A6MP1	1205-0213	4	1	HEAT SINK SGL TO-5/TO-39-C8	28480	1205-0213
A6MP2	01300-21102	8	1	HEAT SINK-CLAMP	28480	01300-21102
A6MP3	5040-0401	6	1	SUPPORT CAPACITOR	28480	5040-0401
A6MP4	01300-21103	9	1	HEAT SINK-BASE	28480	01300-21103
A6MP5	1200-0185	9	5	INSULATOR—XSTR-NYLON	28480	1200-0185
A6Q1	1853-0036	2	15	TRANSISTOR PNP SI PD=310MW FT=250MHZ	28480	1853-0036
A6Q2	1853-0036	2		TRANSISTOR PNP SI PD=310MW FT=250MHZ	28480	1853-0036
A6Q3	1853-0036	2		TRANSISTOR PNP SI PD=310MW FT=250MHZ	28480	1853-0036
A6Q4	1853-0036	2		TRANSISTOR PNP SI PD=310MW FT=250MHZ	28480	1853-0036
A6Q5	1854-0215	1	3	TRANSISTOR NPN SI PD=350MW FT=300MHZ	04713	2N3904
A6Q6	1853-0036	2		TRANSISTOR PNP SI PD=310MW FT=250MHZ	28480	1853-0036
A6Q7	1854-0215	1		TRANSISTOR NPN SI PD=350MW FT=300MHZ	04713	2N3904
A6Q8	1853-0036	2		TRANSISTOR PNP SI PD=310MW FT=250MHZ	28480	1853-0036
A6Q9	1853-0036	2		TRANSISTOR PNP SI PD=310MW FT=250MHZ	28480	1853-0036
A6Q10	1853-0036	2		TRANSISTOR PNP SI PD=310MW FT=250MHZ	28480	1853-0036
A6Q11	1854-0092	2	1	TRANSISTOR NPN SI PD=200MW FT=600MHZ	28480	1854-0092
A6Q12				NOT ASSIGNED		
A6Q13	1853-0036	2		TRANSISTOR PNP SI PD=310MW FT=250MHZ	28480	1853-0036
A6Q14	1853-0036	2		TRANSISTOR PNP SI PD=310MW FT=250MHZ	28480	1853-0036
A6Q15	1853-0036	2		TRANSISTOR PNP SI PD=310MW FT=250MHZ	28480	1853-0036
A6Q16	1853 0036	2		TRANSISTOR PNP SI PD=310MW FT=250MHZ	28480	1853-0036
A6Q17	1854 0404	0	2	TRANSISTOR NPN SI TO-18 PD=360MW	28480	1854-0404

See introduction to this section for ordering information

Table 6-2. Replaceable Parts (Cont'd)

Reference Designator	HP Part Number	C D	Qty	Description	Mfr Code	Mfr Part Number
A6Q18	1853-0036	2		TRANSISTOR PNP SI PD=310MW FT=250MHZ	28480	1853-0036
A6Q19	1854-0404	0		TRANSISTOR NPN SI TO-18 PD=360MW	28480	1854-0404
A6Q20	1853-0036	2		TRANSISTOR PNP SI PD=310MW FT=250MHZ	28480	1853-0036
A6Q21	1854-0234	4	1	TRANSISTOR NPN 2N3440 SI TO-5 PD=1W	0192B	2N3440
A6Q22	1854-0215	1		TRANSISTOR NPN SI PD=350MW FT=300MHZ	04713	2N3904
A6Q23	1853-0036	2		TRANSISTOR PNP SI PD=310MW FT=250MHZ	28480	1853-0036
A6Q24	1853-0038	4	1	TRANSISTOR PNP SI TO-39 PD=1W FT=100MHZ	28480	1853-0038
A6Q25	1854-0419	7	1	TRANSISTOR NPN SI TO-39 PD=1W FT=200MHZ	28480	1854-0419
A6R1	0684 4701	6	16	RESISTOR 47 10% 25W FC TC= 400/+500	01121	CB4701
A6R2	0757-0439	4	8	RESISTOR 6 81K 1% 125W F TC -0±100	24546	C4-1/8-TO-6811-F
A6R3	0757-0317	7	1	RESISTOR 1 33K 1% 125W F TC=0±100	24546	C4-1/8-TO-1331-F
A6R4	0757-0439	4		RESISTOR 6 81K 1% 125W F TC -0+100	24546	C4-1/8-TO-6811-F
A6R5	0684-4701	6		RESISTOR 47 10% 25W FC TC -400/+500	01121	CB4701
A6R6	0757-0438	3	16	RESISTOR 5 11K 1% 125W F TC=+100	24546	C4-1/8-TO-5111-F
A6R7	0757-0438	3		RESISTOR 5 11K 1% 125W F TC=±100	24546	C4-1/8-TO-5111-F
A6R8	0757-0438	3		RESISTOR 5 11K 1% 125W F TC=+100	24546	C4-1/8-TO-5111-F
A6R9	0757-0438	3		RESISTOR 5 11K 1% 125W F TC=+100	24546	C4-1/8-TO-5111-F
A6R10	2100-3352	7	8	RESISTOR TRMR 1K 10% C SIDE-ADJ 1-TRN	28480	2100-3352
A6R11	2100 3352	7		RESISTOR TRMR 1K 10% C SIDE-ADJ 1-TRN	28480	2100-3352
A6R12	0757-0416	7	9	RESISTOR 511 1% 125W F TC=0+100	24546	C4-1/8-TO 511R-F
A6R13	0757-0416	7		RESISTOR 511 1% 125W F TC=0+100	24546	C4-1/8-TO-511R-F
A6R14	0684-4731	2	4	RESISTOR 47K 10% 25W FC TC= 400/+800	01121	CB4731
A6R15	0684-4701	6		RESISTOR 47 10% 25W FC TC=-400/+500	01121	CB4701
A6R16	0757-0439	4		RESISTOR 6 81K 1% 125W F TC=0+100	24546	C4-1/8-TO-6811-F
A6R17	0757-0424	7	1	RESISTOR 1 1K 1% 125W F TC=0±100	24546	C4-1/8-TO-1101-F
A6R18	0757-0439	4		RESISTOR 6 81K 1% 125W F TC=0±100	24546	C4-1/8-TO-6811-F
A6R19	0684-4701	6		RESISTOR 47 10% 25W FC TC=-400/+500	01121	CB4701
A6R20	0757-0438	3		RESISTOR 5 11K 1% 125W F TC=+100	24546	C4-1/8-TO-5111-F
A6R21	0757-0438	3		RESISTOR 5 11K 1% 125W F TC=±100	24546	C4-1/8-TO-5111-F
A6R22	0757-0438	3		RESISTOR 5 11K 1% 125W F TC=±100	24546	C4-1/8-TO-5111-F
A6R23	2100-3352	7		RESISTOR-TRMR 1K 10% C SIDE-ADJ 1-TRN	28480	2100-3352
A6R24	2100-3352	7		RESISTOR-TRMR 1K 10% C SIDE-ADJ 1-TRN	28480	2100-3352
A6R25	0757-0438	3		RESISTOR 5 11K 1% 125W F TC=+100	24546	C4-1/8-TO-5111-F
A6R26	0757-0416	7		RESISTOR 511 1% 125W F TC=0+100	24546	C4-1/8-TO-511R F
A6R27	0757-0416	7		RESISTOR 511 1% 125W F TC=0+100	24546	C4-1/8-TO-511R-F
A6R28	0684-4731	2		RESISTOR 47K 10% 25W FC TC=-400/+800	01121	CB4731
A6R29	0684-4701	6		RESISTOR 47 10% 25W FC TC=-400/+500	01121	CB4701
A6R30	0684-4701	6		RESISTOR 47 10% 25W FC TC -400/+500	01121	CB4701
A6R31	0757-0414	5	2	RESISTOR 432 1% 125W F TC=0+100	24546	C4-1/8-TO-432R-F
A6R32	0757-0414	5		RESISTOR 432 1% 125W F TC=0±100	24546	C4-1/8-TO 432R-F
A6R33	0757-0409	8	4	RESISTOR 274 1% 125W F TC=0+100	24546	C4-1/8-TO-274R-F
A6R34	0757-0280	3	6	RESISTOR 1K 1% 125W F TC=0±100	24546	C4-1/8-TO-1001-F
A6R35	0757-0409	8		RESISTOR 274 1% 125W F TC=0±100	24546	C4-1/8-TO-274R-F
A6R36	0757-0280	3		RESISTOR 1K 1% 125W F TC=0±100	24546	C4-1/8-TO-1001-F
A6R37	0757-0728	4	1	RESISTOR 619 1% 25W F TC=0±100	24546	C4-1/8-TO-619R-F
A6R38	0757-0907	1	2	RESISTOR 200 2% 125W F TC=0±100	24546	C4-1/8-TO-201-G
A6R39	0757-0907	1		RESISTOR 200 2% 125W F TC=0+100	24546	C4-1/8-TO-201-G
A6R40	0757-0280	3		RESISTOR 1K 1% 125W F TC=0+100	24546	C4-1/8-TO-1001 F
A6R41	0698 0085	0	1	RESISTOR 2 61K 1% 125W F TC 0+100	24546	C4 1/8-TO-2611-F
A6R42	0757-0346	2	1	RESISTOR 10 1% 125W F TC=0+100	24546	C4-1/8-TO-10R0-F
A6R43	2100-2574	3	1	RESISTOR-TRMR 500 10% C SIDE-ADJ 1-TRN	30983	ET50X501
A6R44	2100-3274	2	2	RESISTOR-TRMR 10K 10% C SIDE-ADJ 1 TRN	30983	2100-3274
A6R45	0757 0437	2	1	RESISTOR 4 75K 1% 125W F TC=0+100	24546	C4-1/8-TO-4751 F
A6R46	0757-0283	6	1	RESISTOR 2K 1% 125W F TC=0±100	24546	C4-1/8-TO-2001 F
A6R47	2100-2489	9	1	RESISTOR-TRMR 5K 10% C SIDE-ADJ 1-TRN	30983	ET50X502
A6R48	0684-4701	6		RESISTOR 47 10% 25W FC TC=-400/+500	01121	CB4701
A6R49	0684-4701	6		RESISTOR 47 10% 25W FC TC=-400/+500	01121	CB4701
A6R50	0687-4711	4	2	RESISTOR 470 10% 5W CC TC=0+529	01121	EB4711
A6R51	0684-3901	6	3	RESISTOR 39 10% 25W FC TC=-400/+500	01121	CB3901
A6R52	0687-4711	4		RESISTOR 470 10% 5W CC TC=0+529	01121	EB4711
A6R53				NOT ASSIGNED		
A6R54	0684-4701	6		RESISTOR 47 10% 25W FC TC -400/+500	01121	CB4701
A6R55	0757-0439	4		RESISTOR 6 81K 1% 125W F TC=0±100	24546	C4 1/8-TO-6811-F
A6R56	0757-0421	4	2	RESISTOR 825 1% 125W F TC=0±100	24546	C4-1/8-TO-825R-F
A6R57	0757-0439	4		RESISTOR 6 81K 1% 125W F TC=0±100	24546	C4-1/8-TO-6811-F
A6R58	0684-4701	6		RESISTOR 47 10% 25W FC TC=-400/+500	01121	CB4701
A6R59	0757-0438	3		RESISTOR 5 11K 1% 125W F TC=+100	24546	C4-1/8-TO-5111-F
A6R60	0757-0438	3		RESISTOR 5 11K 1% 125W F TC=±100	24546	C4-1/8-TO-5111-F
A6R61	2100-3352	7		RESISTOR-TRMR 1K 10% C SIDE-ADJ 1-TRN	28480	2100-3352
A6R62	2100-3352	7		RESISTOR-TRMR 1K 10% C SIDE-ADJ 1-TRN	28480	2100-3352
A6R63	0757-0438	3		RESISTOR 5 11K 1% 125W F TC=+100	24546	C4-1/8-TO-5111-F
A6R64	0757-0438	3		RESISTOR 5 11K 1% 125W F TC=+100	24546	C4-1/8-TO-5111-F
A6R65	0757-0416	7		RESISTOR 511 1% 125W F TC=0±100	24546	C4-1/8-TO-511R-F
A6R66	0757-0416	7		RESISTOR 511 1% 125W F TC=0±100	24546	C4-1/8-TO-511R-F
A6R67	0684-4731	2		RESISTOR 47K 10% 25W FC TC= 400/+800	01121	CB4731
A6R68	0684-4701	6		RESISTOR 47 10% 25W FC TC=-400/+500	01121	CB4701
A6R69	0757-0439	4		RESISTOR 6 81K 1% 125W F TC=0±100	24546	C4-1/8-TO-6811-F
A6R70	0757-0421	4		RESISTOR 825 1% 125W F TC=0±100	24546	C4-1/8-TO-825R-F

See introduction to this section for ordering information

Table 6-2. Replaceable Parts (Cont'd)

Reference Designator	HP Part Number	C D	Qty	Description	Mfr Code	Mfr Part Number
A6R71	0757 0439	4		RESISTOR 6 81K 1% 125W F TC=0±100	24546	C4-1/8-TO-6811-F
A6R72	0684 4701	6		RESISTOR 47 10% 25W FC TC=-400/+500	01121	CB4701
A6R73	0757-0438	3		RESISTOR 5 11K 1% 125W F TC=±100	24546	C4-1/8-TO-5111-F
A6R74	2100-3352	7		RESISTOR-TRMR 1K 10% C SIDE-ADJ 1-TRN	28480	2100-3352
A6R75	2100-3352	7		RESISTOR-TRMR 1K 10% C SIDE-ADJ 1-TRN	28480	2100-3352
A6R76	0757-0438	3		RESISTOR 5 11K 1% 125W F TC=±100	24546	C4-1/8-TO-5111-F
A6R77	0757-0438	3		RESISTOR 5 11K 1% 125W F TC=±100	24546	C4-1/8-TO-5111-F
A6R78	0757-0438	3		RESISTOR 5 11K 1% 125W F TC=±100	24546	C4-1/8-TO-5111-F
A6R79	0757-0416	7		RESISTOR 511 1% 125W F TC=0±100	24546	C4-1/8-TO-511R-F
A6R80	0757-0416	7		RESISTOR 511 1% 125W F TC=0±100	24546	C4-1/8-TO-511R-F
A6R81	0684-4731	2		RESISTOR 47K 10% 25W FC TC=-400/+800	01121	CB4731
A6R82	0684-4701	6		RESISTOR 47 10% 25W FC TC=-400/+500	01121	CB4701
A6R83	0684-4701	6		RESISTOR 47 10% 25W FC TC=-400/+500	01121	CB4701
A6R84	0757-0280	3		RESISTOR 1K 1% 125W F TC=0±100	24546	C4-1/8-TO-1001-F
A6R85	0757-0402	1	1	RESISTOR 110 1% 125W F TC=0±100	24546	C4-1/8-TO-111-F
A6R86	0757-0294	9	1	RESISTOR 17 8 1% 125W F TC=0±100	19701	MF4C1/8-TO-17R8-F
A6R87	0757-0416	7		RESISTOR 511 1% 125W F TC=0±100	24546	C4-1/8-TO-511R-F
A6R88	0757-0409	8		RESISTOR 274 1% 125W F TC=0±100	24546	C4-1/8-TO-274R-F
A6R89	0757-0280	3		RESISTOR 1K 1% 125W F TC=0±100	24546	C4-1/8-TO-1001-F
A6R90	2100-3274	2		RESISTOR-TRMR 10K 10% C SIDE-ADJ 1-TRN	28480	2100-3274
A6R91	0757 0747	7	1	RESISTOR 5 11K 1% 25W F TC=0±100	24546	C5-1/4-TO-5111-F
A6R92	0757-0339	3	1	RESISTOR 3 01K 1% 25W F TC=0±100	24546	C5-1/4-TO-3011-F
A6R93	0757-0409	8		RESISTOR 274 1% 125W F TC=0±100	24546	C4-1/8-TO-274R-F
A6R94	0757-0280	3		RESISTOR 1K 1% 125W F TC=0±100	24546	C4-1/8-TO-1001-F
A6R95	0684-4701	6		RESISTOR 47 10% 25W FC TC=-400/+500	01121	CB4701
A6R96	0811-0007	8	1	RESISTOR 10K 1% 5W PW TC=0±20	28480	0811-0007
A6R97	0684-4701	6		RESISTOR 47 10% 25W FC TC=-400/+500	01121	CB4701
A6R98	0687-4701	2	1	RESISTOR 47 10% 5W CC TC=0+412	01121	EB4701
A6R99				NOT ASSIGNED		
A6R100	0757-0736	4	2	RESISTOR 1 5K 1% 25W F TC=0±100	24546	C5-1/4-TO-1501-F
A6R101	0757-0764	8	1	RESISTOR 33 2K 1% 25W F TC=0+100	24546	C5-1/4-TO-3322-F
A6R102	0764-0005	5	1	RESISTOR 10K 5% 2W MO TC=0±200	28480	0764-0005
A6R103	0757-0736	4		RESISTOR 1 5K 1% 25W F TC=0±100	24546	C5-1/4-TO-1501-F
A6R104	0757-0290	5	1	RESISTOR 6 19K 1% 125W F TC=0±100	19701	MF4C1/8-TO-6191-F
A6R105	0684-3901	6		RESISTOR 39 10% 25W FC TC=-400/+500	01121	CB3901
A6R106	0684-3901	6		RESISTOR 39 10% 25W FC TC=-400/+500	01121	CB3901
A6R107	0687-1821	1	1	RESISTOR 1 8K 10% 5W CC TC=0+647	01121	EB1821
A6R108	0687-2231	9	1	RESISTOR 22K 10% 5W CC TC=0+765	01121	EB2231
A6R109	0687-1051	9	1	RESISTOR 1M 10% 5W CC TC=0+1000	01121	EB1051
A6R110	0687-6801	7	1	RESISTOR 68 10% 5W CC TC=0+412	01121	EB6801
A6VR1				NOT ASSIGNED		
A6VR2				NOT ASSIGNED		
A6VR3	1902-0041	4	2	DIODE-ZNR 5 11V 5% DO-7 PD= 4W TC=- 009%	28480	1902-0041
A6VR4	1902-0041	4		DIODE-ZNR 5 11V 5% DO-7 PD= 4W TC=- 009%	28480	1902-0041

See introduction to this section for ordering information

Table 6-2. Replaceable Parts (Cont'd)

Reference Designator	HP Part Number	C D	Qty	Description	Mfr Code	Mfr Part Number
A7	01317-66504	7	1	PC BOARD ASSEMBLY-LEFT CONNECTOR	28480	01317-66504
A7XA2	1251-1558	9	4	CON PC 15F	28480	1251-1558
A7XA4	1251-1558	9		CON PC 15F	28480	1251-1558
A7XA6	1251-1558	9		CON PC 15F	28480	1251-1558
A7XA14	1251-1558	9		CON PC 15F	28480	1251-1558
A8	01317-66505	8	1	PC BOARD ASSEMBLY-RIGHT CONNECTOR	28480	01317-66505
A8XA1	1251-1558	9	3	CON PC 15F	28480	1251-1558
A8XA3	1251-1558	9		CON PC 15F	28480	1251-1558
A8XA5	1251-1558	9		CON PC 15F	28480	1251-1558
A8S1	3101-0973	5	1	SWITCH SLIDE DPDT	28480	3101-0973

See introduction to this section for ordering information

Table 6-2. Replaceable Parts (Cont'd)

Reference Designator	HP Part Number	C D	Qty	Description	Mfr Code	Mfr Part Number
A9	01311-66508		1	PC BOARD ASSEMBLY HIGH VOLTAGE	28480	01311-66508
A9C1	0180-1784	1	1	CAPACITOR-FXD 1000μF +75-10% 40VDC AL	28480	0180-1784
A9C2	0180 0648	4	1	CAPACITOR-FXD 1 μF ±10% 35VDC TA	28480	0180-0648
A9C3	0180-0094	4	1	CAPACITOR-FXD 100μF +75 -10% 25VDC AL	56289	30D107G025DD2
A9C4	0170-0018	1	1	CAPACITOR-FXD 1UF ±5% 200VDC POLY	28480	0170-0018
A9C5	0180-0197	8	1	CAPACITOR-FXD 2 2μF ±10% 20VDC TA	56289	150D225X9020A2
A9C6	0160-3508	9	2	CAPACITOR-FXD 1μF +80-20% 50VDC CER	28480	0160-3508
A9C7	0160-0302	5	1	CAPACITOR-FXD 018μF +10% 200VDC POLYE	28480	0160-0302
A9C8	0160-3508	9		CAPACITOR FXD 1μF +80-20% 50VDC CER	28480	0160-3508
A9C9	0160 0168	1	1	CAPACITOR-FXD 1μF +80-20% 50VDC CER	28480	0168
A9C10	0160-3558	9	1	CAPACITOR-FXD 1μF ±20% 50VDC CER	28480	0160-3558
A9C11	0180-2255	3	1	CAPACITOR—FXD 2 2μF ±20% 20VDC TA	28480	0180-2255
A9C12	0150-0052	1	1	CAPACITOR-FXD 05μF +20% 400VDC CER	28480	0150-0052
A9C13	0160-4148	5	2	CAPACITOR FXD 033μF +20% 6KVDC	56289	430P333060
A9C14	0160-4148	5		CAPACITOR-FXD 033μF ±20% 6KVDC	56289	430P333060
A9C15	0160-3960	7	2	CAPACITOR-FXD 1000PF +20% 8KVDC	28480	0160-3960
A9C16	0160-2264	2	2	CAPACITOR-FXD 20PF +5% 500VDC CER 0+30	28480	0160-2264
A9C17	0160-2264	2	2	CAPACITOR-FXD 20PF ±5% 500VDC CER 0+30	28480	0160-2264
A9C18	0180-0269	5	2	CAPACITOR-FXD 1μF +50-10% 150VDC AL	56289	30D105G150BA2
A9C19	0160-3960	7		CAPACITOR-FXD 1000PF +20% 8KVDC	28480	0160-3960
A9C20	0160-0678	8	1	CAPACITOR-FXD 01μF ±20% 6KVDC	28480	0160-0678
A9C21	0180-0269	5		CAPACITOR-FXD 1μF +50-10% 150VDC AL	56289	30D105G150BA2
A9C22	0160-0544	7	1	CAPACITOR-FXD 022μF ±20% 4KVDC	28480	0160-0544
A9C23	0160 0684	6	1	CAPACITOR-FXD 1000PF ±20% 4KVDC	28480	0160 0684
A9C24	0160 4051	9	1	CAPACITOR-FXD 01μF ±20% 4KVDC	28480	0160-4051
A9C25	0160-3622	8	1	CAPACITOR-FXD 1μF +80% 20% 100 VDC CER	28480	0160-3622
A9CR1	1901-0040	1	2	DIODE-SWITCHING 30V 50MA 2NS DO-35	28480	1901-0040
A9CR2	1901 0040	1		DIODE-SWITCHING 30V 50MA 2NS DO-35	28480	1901-0040
A9CR3	1901 0028	5	11	DIODE-PWR RECT 400V 750VA DO-29	28480	1901-0028
A9CR4	1901-0028	5		DIODE-PWR RECT 400V 750VA DO-29	28480	1901-0028
A9CR5	1901-0028	5		DIODE-PWR RECT 400V 750VA DO-29	28480	1901-0028
A9CR6				NOT ASSIGNED		
A9CR7	1901-0652	1	1	DIODE-HV RECT 12KV 10MA 250NS	28480	1901-0652
A9CR8	1901-0028	5		DIODE-PWR RECT 400V 750VA DO-29	28480	1901-0028
A9CR9	1901 0028	5		DIODE-PWR RECT 400V 750VA DO-29	28480	1901-0028
A9CR10	1901-0028	5		DIODE-PWR RECT 400V 750VA DO-29	28480	1901-0028
A9CR11	1901 0028	5		DIODE-PWR RECT 400V 750VA DO-29	28480	1901-0028
A9CR12	1901-0028	5		DIODE-PWR RECT 400V 750VA DO-29	28480	1901-0028
A9CR13	1901-0028	5		DIODE-PWR RECT 400V 750VA DO-29	28480	1901-0028
A9CR14	1901-0028	5		DIODE-PWR RECT 400V 750VA DO-29	28480	1901-0028
A9CR15	1901 0028	5		DIODE-PWR RECT 400V 750VA DO-29	28480	1901-0028
A9CR16	1906 0006	9	1	DIODE-FW BRDG 400V 1A	28480	1906-0006
A9F1	2110-0303	4	1	FUSE 2A 250V 1 25X 25 UL	28480	2110-0303
A9XF1	2110-0269	0	2	FUSEHOLDER-CLIP TYPE 25D FUSE	28480	2110-0269
A9H1	2360-0275	7	6	SCREW MAC 6-32 .250 IN-LNG NYLON	00000	ORDER BY DESCRIPTION
A9J1	1251 3276	2	1	CONNECTOR 6-PIN M POST TYPE	28480	1251-3276
A9L1	9140 0171	3	1	COIL-MLD 40μH 10% Q=20 296DX 968 LG-NOM	28480	9140-0171
A9L2	9140-0138	2	1	COIL-MLD 180μM 5% Q=65 155DX 375 LG-NOM	28480	9140-0138
A9MP1	0340-0007	9	3	CERAMIC STANDOFF-RND 5-IN-LG 6-32 THD 5-IN-OD	00000	ORDER BY DESCRIPTION
A9Q1				NOT ASSIGNED		
A9Q2				NOT ASSIGNED		
A9Q3	1884-0064	1	1	THYRISTOR-SCR VRRM=200	03508	C106B41
A9R1	0687-3921	6	1	RESISTOR 3 9K 10% 5W CC TC=0+647	28480	0687-3921
A9R2	0687-3311	8	1	RESISTOR 330 10% 5W CC TC=0+529	28480	0687-3311
A9R3	0757-0488	3	1	RESISTOR 909K 1% 125W F TC=0±100	28480	0757-0488
A9R4	0757-0486	1	1	RESISTOR 750K 1% 125W F TC=0±100	28480	0757-0486
A9R5	0698-3620	5	1	RESISTOR 100 5% 2W MO TC=0±200	28480	0698-3620
A9R6	0683-0335	2	1	RESISTOR 3 3 5% 25W FC TC=-400/+500	01121	CB33G5
A9R7	0757-0465	6	3	RESISTOR 100K 1% 125W F TC 0+100	24546	C4-1/8-TO-1003-F
A9R8	0683-2265	1	1	RESISTOR 22M 5% 25W FC TC=-900/+1200	01121	CB2265
A9R9	0757-0465	6		RESISTOR 100K 1% 125W F TC=0+100	24546	C4-1/8 TO-1003-F
A9R10	0684-1011	5	1	RESISTOR 100 10% 25W FC TC= 400/+500	01121	CB1011
A9R11	0757-0479	2	1	RESISTOR 392K 1% 125W F TC=0±100	19701	MF4C1/8-TO-3923-F
A9R12	0684-1021	7	4	RESISTOR 1K 10% 25W FC TC=-400/+600	01121	CB1021
A9R13	0687-2211	5	1	RESISTOR 220 10% 5W CC TC -0 +529	01121	EB2211
A9R14	0757 0442	9	3	RESISTOR 10K 1% 125W F TC=0±100	24546	C4-1/8-TO-1002 F
A9R15	0757-0274	5	1	RESISTOR 1 21K 1% 125W F TC=0+100	24546	C4-1/8-TO-1211-F
A9R16	0757 0442	9		RESISTOR 10K 1% 125W F TC=0±100	24546	C4-1/8-TO-1002-F
A9R17	0757-0442	9		RESISTOR 10K 1% 125W F TC -0±100	24546	C4-1/8-TO-1002-F
A9R18	0683-1555	0	3	RESISTOR 1 5M 5% 25W FC TC=-900/+1100	01121	CB1555
A9R19	0683-1555	0		RESISTOR 1 5M 5% 25W FC TC=-900/+1100	01121	CB1555
A9R20	0683-1555	0		RESISTOR 1 5M 5% 25W FC TC=-900/+1100	01121	CB1555

See introduction to this section for ordering information

Table 6-2. Replaceable Parts (Cont'd)

Reference Designator	HP Part Number	C D	Qty	Description	Mfr Code	Mfr Part Number
A9R21	0698-3161	9	1	RESISTOR 38 3K 1% 125W F TC=0±100	24546	C4-1/8 TO-3832-F
A9R22	0757 0475	8	1	RESISTOR 274K 1% 125W F TC =0±100	24546	C4-1/8-TO-2743-F
A9R23	0687-4721	6	1	RESISTOR 4 7K 10% 5W CC TC=0+647	01121	EB4721
A9R24	0698 8018	5	2	RESISTOR 30M 1% 3W C TC=0+100	03888	PVC175-3-TO-3004-F
A9R25	0687-3941	0	2	RESISTOR 390K 10% 5W CC TC =0+882	01121	EB3941
A9R26	0687-3941	0		RESISTOR 390K 10% 5W CC TC=0+882	01121	EB3941
A9R27	0698-8018	5		RESISTOR 30M 1% 3W C TC 0±100	03888	PVC175-3-TO-3004-F
A9R28	0684-1021	7		RESISTOR 1K 10% 25W FC TC=-400/+600	01121	CB1021
A9R29	0757-0156	2	1	RESISTOR 1 5M 1% 5W F TC=0±100	28480	0757-0156
A9R30	2100-3626	8	1	RESISTOR-TRMR 2M 20% C SIDE-ADJ 1-TRN	73138	72XR2M
A9R31	0699-0167	1	1	RESISTOR 20M 5% 1W C TC=0±250	28480	0699-0167
A9R32	0699-0904	4	4	RESISTOR 1 5K 10% 25W CC	28480	0699-0904
A9R33	0684-1061	5	2	RESISTOR 10M 10% 25W FC TC=900/+1100	01121	CB1061
A9R34	0699-0904	4		RESISTOR 1 5K 10% 25W CC	28480	0699-0904
A9R35	0699-0904	4		RESISTOR 1 5K 10% 25W CC	28480	0699-0904
A9R36	0699 0904	4		RESISTOR 1 5K 10% 25W CC	28480	0699-0904
A9R37	0757-0465	6	1	RESISTOR 100K 1% 125W F TC 0±100	24546	C4-1/8-TO-1003-F
A9R38	2100-3253	7	1	RESISTOR-TRMR 50K 10% C TOP-ADJ 1-TRN	28480	2100 3253
A9R39	0684-1061	5		RESISTOR 10M 10% 25W FC TC=900/+1100	01121	CB1061
A9R40	0684-1021	7		RESISTOR 1K 10% 25W FC TC 400/+600	01121	CB1021
A9R41	0684-1021	7		RESISTOR 1K 10% 25W FC TC=-400/+600	01121	CB1021
A9R42	0684-6811	6	1	RESISTOR 680 10% 25W FC TC -400/+600	01121	CB6811
A9R44	0757-0342	8	1	NOT ASSIGNED RESISTOR 100K 1% 25W F TC=0±100	28546	C4-1/8/TO/1003-F
A9RT1	0837-0105	1	2	THERMISTOR BEAD 200K-OHM TC=-4 9%/C-DEG	28480	0837 0105
A9RT1	0837-0105	1		THERMISTOR BEAD 200K-OHM TC=-4 9%/C-DEG	28480	0837-0105
A9T1	01311-61101	4	1	TRANSFORMER ASSEMBLY-HV	28480	01311-61101
A9U1	1826-0167	3	1	IC OP AMP PRGMBL TO-99	02735	CA3094AT
A9U2	1820-0217	2	1	IC OP AMP GP 8 DIP-P	28480	1820 0217
A9VR1	1902-3249	0	1	DIODE-ZNR 22 1V 2% DO-7 PD= 4W TC=+ 071%	28480	1902-3249
A9VR2	1902-3094	3	1	DIODE-ZNR 5 11V 2% DO-35 PD= 4W	28480	1902-3094
A9VR3	1902-0041	4		DIODE-ZNR 5 11V 5% DO-7 PD 4W TC=- 009%	28480	1902-0041
A9VR4	1902-3381	1	2	DIODE-ZNR 68 1V 5% DO-7 PD 4W TC=+ 079%	28480	1902-3381
A9VR5	1902-3381	1		DIODE-ZNR 68 1V 5% DO-7 PD= 4W TC=+ 079%	28480	1902-3381
A9VR6	1902-0668	1	5	DIODE-ZNR 200V 5% DO-15 PD=1W TC=+ 088%	28480	1902-0668
A9VR7	1902 0668	1		DIODE-ZNR 200V 5% DO-15 PD 1W TC=+ 088%	28480	1902-0668
A9VR8	1902-0668	1		DIODE-ZNR 200V 5% DO-15 PD=1W TC=+ 088%	28480	1902-0668
A9VR9	1902-0668	1		DIODE-ZNR 200V 5% DO-15 PD=1W TC=+ 088%	28480	1902 0668
A9VR10	1902-0668	1		DIODE-ZNR 200V 5% DO-15 PD=1W TC=+ 088%	28480	1902 0668
A9VR11	1902-0175	5	1	DIODE-ZNR 100V 5% DO-15 PD=1W TC=+ 083%	28480	1902-0175
A9VR12	1902-0597	5	1	DIODE-ZNR 56V 5% PD=1W	28480	1902-0597

Table 6-2. Replaceable Parts (Cont'd)

Reference Designator	HP Part Number	C D	Qty	Description	Mfr Code	Mfr Part Number
A11	01310-66533	5	1	PC BOARD ASSEMBLY-LVPS	28480	01310-66533
A11C1	0160-3443	1	3	CAPACITOR-FXD 1μF +80-20% 50VDC CER	28480	0160-3443
A11C2	0160-3443	1		CAPACITOR-FXD 1μF +80-20% 50VDC CER	28480	0160-3443
A11C3	0180-0058	0	2	CAPACITOR-FXD 50μF +75-10% 25VDC AL	56289	30D506G025CC2
A11C4	0160-3443	1		CAPACITOR-FXD 1μF +80-20% 50VDC CER	28480	0160 3443
A11C5	0180-0058	0		CAPACITOR-FXD 50μF +75-10% 25VDC AL	56289	30D506G025CC2
A11C6	0160-0168	1	4	CAPACITOR-FXD 1μF ±10% 200VDC POLYE	28480	0160-0168
A11C7	0160-0168	1		CAPACITOR-FXD 1μF ±10% 200VDC POLYE	28480	0160-0168
A11C8	0160-0904	3	2	CAPACITOR-FXD 05μF ±20% 1KVDC CER	28480	0160-0904
A11C9	0160-0168	1		CAPACITOR-FXD 1μF ±10% 200VDC POLYE	28480	0160-0168
A11C10	0160-0168	1		CAPACITOR-FXD 1μF ±10% 200VDC POLYE	28480	0160-0168
A11C11	0160-0904	3		CAPACITOR-FXD 05μF +20% 1KVDC CER	28480	0160-0904
A11CR1	1901-0030	9	4	DIODE-PWR RECT 800V 600MA DO-29	28480	1901-0030
A11CR2	1901-0030	9		DIODE-PWR RECT 800V 600MA DO-29	28480	1901-0030
A11CR3	1901-0030	9		DIODE-PWR RECT 800V 600MA DO-29	28480	1901 0030
A11CR4	1901 0030	9		DIODE PWR RECT 800V 600MA DO 29	28480	1901-0030
A11CR5	1901 0026	3	8	DIODE-PWR RECT 200V 750MA DO-29	28480	1901-0026
A11CR6	1901-0026	3		DIODE-PWR RECT 200V 750MA DO-29	28480	1901-0026
A11CR7	1901-0026	3		DIODE-PWR RECT 200V 750MA DO-29	28480	1901-0026
A11CR8	1901 0026	3		DIODE-PWR RECT 200V 750MA DO-29	28480	1901-0026
A11CR9	1901-0026	3		DIODE-PWR RECT 200V 750MA DO-29	28480	1901-0026
A11CR10	1901-0026	3		DIODE-PWR RECT 200V 750MA DO-29	28480	1901-0026
A11CR11	1901 0026	3		DIODE-PWR RECT 200V 750MA DO 29	28480	1901 0026
A11CR12	1901-0026	3		DIODE-PWR RECT 200V 750MA DO-29	28480	1901 0026
A11CR13	1901-0040	1	8	DIODE-SWITCHING 30V 50MA 2NS DO 35	28480	1901-0040
A11CR14	1901-0040	1		DIODE-SWITCHING 30V 50MA 2NS DO-35	28480	1901-0040
A11CR15	1901-0028	5	1	DIODE PWR RECT 400V 750MA DO-29	28480	1901-0028
A11CR16	1901-0040	1		DIODE SWITCHING 30V 50MA 2NS DO-35	28480	1901-0040
A11CR17	1901-0040	1		DIODE SWITCHING 30V 50MA 2NS DO-35	28480	1901-0040
A11CR18	1901-0040	1		DIODE-SWITCHING 30V 50MA 2NS DO-35	28480	1901-0040
A11CR19	1901-0040	1		DIODE SWITCHING 30V 50MA 2NS DO-35	28480	1901-0040
A11CR20	1901-0040	1		DIODE-SWITCHING 30V 50MA 2NS DO 35	28480	1901-0040
A11CR21	1901-0040	1		DIODE-SWITCHING 30V 50MA 2NS DO-35	28480	1901-0040
A11F1	2110-0067	6	1	FUSE 3A 250V 1 25X 25UL	28480	2110-0067
A11F2	2110 0001	8	2	FUSE 1A 250V 1 25X 25UL	75915	312001
A11F3	2110 0001	8		FUSE 1A 250V 1 25X 25UL	75915	312001
A11Q1	1854-0234	4	2	TRANSISTOR NPN 2N3440 SI TO-5 PD-1W	0192B	2N3440
A11Q2	1854 0358	3	2	TRANSISTOR NPN SI PD=310MW FT=60MHZ	28480	1854-0358
A11Q3	1854-0358	3		TRANSISTOR NPN SI PD=310MW FT 60MHZ	28480	1854-0358
A11Q4	1854-0234	4		TRANSISTOR NPN 2N3440 SI TO-5 PD=1W	0192B	2N3440
A11Q5	1854-0071	7	2	TRANSISTOR NPN SI PD=300MW FT 200MHZ	28480	1854-0071
A11Q6	1854-0022	8	1	TRANSISTOR NPN SI TO-39 PD=700MW	07263	817843
A11Q7	1854 0071	7		TRANSISTOR NPN SI PD 300MW FT 200MHZ	28480	1854-0071
A11R1	0764-0027	1	1	RESISTOR 75K 5% 2W MO TC=±200	28480	0764-0027
A11R2	0811-1853	4	1	RESISTOR 25 5% 5W PW TC +20	28480	0811-1853
A11R3	0764-0001	1	1	RESISTOR 6 2K 5% 2W MO TC=±200	28480	0764-0001
A11R4	0757-0388	2	3	RESISTOR 30 1 1% 125W F TC=±100	24546	C4-1/8 TO-30R1-F
A11R5	0757-0128	8	1	RESISTOR 200K 1% 5W F TC -+100	28480	0757-0128
A11R6	0757-0399	5	1	RESISTOR 82 5 1% 125W F TC=0±100	24546	C4-1/8-TO-82R5-F
A11R7	0757-0433	8	1	RESISTOR 3 32K 1% 125W F TC=0±100	24546	C4-1/8-TO-3321 F
A11R8	0757-0855	8	2	RESISTOR 68 1K 1% 5W F TC=0±100	28480	0757 0855
A11R9	0757-0855	8		RESISTOR 68 1K 1% 5W F TC=0±100	28480	0757-0855
A11R10	0757-0341	7	1	RESISTOR 30 1K 1% 25W F TC=0±100	24546	C5-1/4 TO-3012-F
A11R11	0698-6101	3	1	RESISTOR 40K .1% .5W F TC=0±50	28480	0-698-6101
A11R12	2100-2497	9	1	RESISTOR-TRMR 2K 10% C TOP-ADJ 1-TRN	28480	2100-2497
A11R13	0757-0857	0	1	RESISTOR 82.5K 1% .5W F TC=100	28480	0757-0857
A11R14	0757-0850	3	1	RESISTOR 39 2K 1% 5W F TC=0±100	28480	0757-0850
A11R15	0687-3321	0	2	RESISTOR 3 3K 10% 5W CC TC=0+647	01121	EB3321
A11R16	0698-3622	7	1	RESISTOR 120 5% 2W MO TC=0±200	28480	0698-3622
A11R17	0757-0446	3	1	RESISTOR 15K 1% 125W F TC=0±100	24546	C4-1/8-TO-1502-F
A11R18	0757-0388	2		RESISTOR 30 1 1% 125W F TC=0±100	24546	C4-1/8-TO-30R1-F
A11R19	0757-0352	0	1	RESISTOR 150K 1% 5W F TC=0±100	28480	0757-0352
A11R20	0757-0344	0	1	RESISTOR 1M 1% 25W F TC -0±100	24546	C5-1/4-TO-1004-F
A11R21	0757-0434	9	1	RESISTOR 3 65K 1% 125W F TC=0±100	24546	C4-1/8-TO-3651-F
A11R22	0698-3152	8	1	RESISTOR 3 48K 1% 125W F TC=0±100	24546	C4-1/8-TO-3481 F
A11R23	0687-3321	0		RESISTOR 3 3K 10% 5W CC TC=0±100	01121	EB3321
A11R24	0757-0440	7	1	RESISTOR 7 5K 1% 125W F TC=0±100	24546	C4-1/8-TO-7501-F
A11R25	0757-0388	2		RESISTOR 30 1 1% 125W F TC=0±100	24546	C4-1/8-TO-30R1-F
A11R26	0757-0737	5	1	RESISTOR 1 62K 1% 25W F TC=0±100	24546	C5-1/4-TO-1621-F
A11R27	0757-0458	7	1	RESISTOR 51 1K 1% 125W F TC=0±100	24546	C4-1/8-TO-5112-F
A11R28	0698-3150	6	1	RESISTOR 2 37K 1% 125W F TC=0±100	24546	C4-1/8 TO-2371-F
A11R29	2100-2061	3	1	RESISTOR-TRMR 200 10% C TOP-ADJ 1-TRN	73138	62PR200
A11R30	0757-1094	9	1	RESISTOR 1 47K 1% 125W F TC=0±100	24546	C4-1/8-TO-1471-F

See introduction to this section for ordering information

Table 6-2. Replaceable Parts (Cont'd)

Reference Designator	HP Part Number	C D	Qty	Description	Mfr Code	Mfr Part Number
A11R31	0767-0009	5	2	RESISTOR 12K 5% 3W MO TC=0±250	27167	PP3-3-250-1202-J
A11R32	0767-0009	5		RESISTOR 12K 5% 3W MO TC=0±250	27167	PP3-3-250-1202-J
A11R33	0684-3321	4	2	RESISTOR 3 3K 10% 25W FC TC=-400/+700	01121	CB3321
A11R34	0684-3321	4		RESISTOR 3 3K 10% 25W FC TC=-400/+700	01121	CB3321
A11R35	0767-0008	4	2	RESISTOR 10K 5% 3W MO TC=0±250	27167	FP3-3-250-1002-J
A11R36	0767-0008	4		RESISTOR 10K 5% 3W MO TC=0±250	27167	FP3-3-250-1002-J
A11V1	1940-0027	6	1	TUBE-ELECTRON DIODE-V RGLTR	28480	1940-0027
A11VR1	1902-0175	5	1	DIODE-ZNR 100V 5% DO-15 PD=1W TC=+ 083%	28480	1902-0175
A11VR2	1902-0049	2	1	DIODE-ZNR 6 19V 5% DO-7 PD= 4W TC=+ 022%	28480	1902-0049
A11VR3	1902-0065	2	1	DIODE-ZNR 46 4V 10% DO-7 PD= 4W	28480	1902-0065
A11VR4	1902-3393	5	1	DIODE-ZNR 75V 5% DO-7 PD= 4W TC=+ 077%	28480	1902 3393
A11VR5	1902-0033	4	1	DIODE-ZNR 1N823 6 2V 5% DO-7 PD= 4W	24046	1N823
A11VR6	1902-0185	7	1	DIODE-ZNR 27 4V 5% DO-7 PD= 4W TC=+ 079%	28480	1902-0185
A11XF1	2110-0269	0	6	FUSEHOLDER-CLIP TYPE 25D-FUSE	28480	2110-0269
A11XF2	2110-0269	0		FUSEHOLDER-CLIP TYPE 25D-FUSE	28480	2110-0269
A11XF3	2110-0269	0		FUSEHOLDER-CLIP TYPE 25D-FUSE	28480	2110-0269
A11MP1	1205-0095	0	1	HEAT SINK SGL TO-5/TO-39-CS	28480	1205-0095
A12	0960-0444	2	1	POWER INPUT MODULE	28480	0960-0444
A13	01311-66503	0	1	BOARD ASSEMBLY-CONTROL	28480	01311 66503
A13R1	2100-3838	4	1	RESISTOR-VAR 1K ±20% 1W LIN	28480	2100-3838
A13R2	2100-3839	5	7	RESISTOR-VAR 5K ±20% 1W LIN	28480	2100-3839
A13R3	2100-3839	5		RESISTOR-VAR 5K ±20% 1W LIN	28480	2100-3839
A13R4	2100-3839	5		RESISTOR-VAR 5K ±20% 1W LIN	28480	2100-3839
A13R5	2100-3839	5		RESISTOR-VAR 5K ±20% 1W LIN	28480	2100-3839
A13R6				NOT ASSIGNED		
A13R7	2100-3839	5		RESISTOR-VAR 5K ±20% 1W LIN	28480	2100-3839
A13R8	2100-3839	5		RESISTOR-VAR 5K ±20% 1W LIN	28480	2100-3839
A13R9	2100-3839	5		RESISTOR-VAR 5K ±20% 1W LIN	28480	2100-3839
A13R10	0687-1001	9	1	RESISTOR 10 10% 5W CC TC=0+412	01121	EB1001
A14	01310-66513	1	1	PC BOARD ASSEMBLY-EXTENDER	28480	01310 66513
A15	01311-68710	5	1	TILT STAND	28480	01311-68710
				OPTION 001		
A16	01311-68701	4	1	RACK MOUNT KIT (IN LIEU OF TILT STAND)	28480	01311-68701
				OPTION 002		
A17	01311-68712	7	1	SHORT TILT STAND	28480	1311-68712
				OPTION 004		
	01311-66507	0	1	CONTRAST FILTER KIT	28480	01311-66507
	01311-68713	8	1	PANEL MASK ASSY	28480	01311-68713
	01311-68701	4	1	RACK MOUNT KIT IN (LIEU OF TILT STAND)	28480	01311-68701
				OPTION 330		
FL1	9135-0046		-1	LINE FILTER (DELETED)		
MP46	7120-4190	0	1	WARNING TAG	28480	7120-4190
W1	8120-1992	5	1	POWER CORD	28480	8120-1992
				OPTION 604		
	5083-3261	2	1	CRT-P4	28480	5083-3261
				OPTION 639		
	5083-3270	3	1	CRT-P39	28480	5083-3270
				OPTION 900		
W1	8120-1351		1	POWER CORD - 250V UNITED KINGDON	28480	8120-1351
				OPTION 901		
W1	8120-1369		1	POWER CORD - 250V AUSTRALIA-NEW ZEALAND	28480	8120-1369
				OPTION 902		
W1	8120-2857		1	POWER CORD - 250V EUROPEAN CONTINENT	28480	8120-2857
				OPTION 904		
W1	8120-0698		1	POWER CORD - 250V USA CANADA	28480	8120-0698
				OPTION 906		
W1	8120-2104		1	POWER CORD - SWITZERLAND	28480	8120-2104
				OPTION 912		
W1	8120-2956		1	POWER CORD - 220V DENMARK	28480	8120-2956

See introduction to this section for ordering information

Table 6-3. List of Manufacturers' Codes

Mfr Code	Manufacturer Name	Address		Zip Code
00000	NO M/F DESCRIPTION FOR THIS MFG NUMBER			
01121	ALLEN BRADLEY CO	MILWAUKEE	WI	53212
01295	TEXAS INSTR INC SEMICOND CMPNT DIV	DALLAS	TX	75231
02735	RCA CORP SOLID STATE DIV	SOMERVILLE	NJ	08876
03508	GENERAL ELECTRIC CO SEMI-CONDUCTOR PRODUCTS	AUBURN	NY	13021
03888	PYROFILM CORP	WHIPPANY	NJ	07981
04713	MOTOROLA SEMICONDUCTOR PRODUCTS	PHOENIX	AZ	85008
07263	FAIRCHILD SEMICONDUCTOR DIV	MOUNTAIN VIEW	CA	94040
19701	MEPCO/ELECTRIC CORP	MINERAL WELLS	TX	76067
24546	CORNING GLASS WORKS (BRADFORD)	BRADFORD	PA	14070
27167	CORNING GLASS WORKS	WILMINGTON	NC	28401
28480	HEWLETT PACKARD CO CORPORATE HQ	PALO ALTO	CA	94304
30983	MEPCO/ELECTRA INC	SAN DIEGO	CA	92121
56289	SPRAGUE ELECTRIC CO	NORTH ADAM	MA	01247
71400	BUSSMAN MFG DIV OF MCGRAM EDISON CO	ST LOUIS	MO	63017
72136	ELECTRO MOTIVE MFG CO INC	WILLIMANTIC	CT	06226
72982	ERIE TECHNOLOGICAL PRODUCTS INC	ERIE	PA	16512
73138	BECKMAN INSTR INC HELIPOT DIV	FULLERTON	CA	92634
75915	LITTLEFUSE INC	DES PLAINS	IL	60016
84411	TRW CAPACITOR DIVISION	OGALLALA	NE	69153

SECTION VII

MANUAL CHANGES

7-1. INTRODUCTION.

7-2. This section contains information for adapting this manual to instruments for which the content does not apply directly.

7-3. MANUAL CHANGES.

7-4. To adapt this manual to your instrument, refer to Table 7-1 and make all manual changes listed for your instrument serial prefix number. Make these changes in the sequence listed. If your instrument serial prefix is not listed on the title page of this manual, or in Table 7-1, it may be documented in a yellow MANUAL CHANGES supplement. For additional information about serial number coverage, refer to INSTRUMENTS COVERED BY MANUAL in Section I.

Table 7-1. Manual Changes by Serial Prefix Number.

Serial Prefix Number	Make Manual Changes
1943A	4, 3, 2, 1
2140A	4, 3, 2
2211A	4, 3
2226A	4

7-5. MANUAL CHANGE INSTRUCTIONS

CHANGE 1

SECTION I. GENERAL INFORMATION
Table 1-1. Under TTL BLANKING, delete the reference to reversible polarity. Delete BINARY GRAY SHADE...
Table 1-4. Delete the requirement for the Binary Z-Input Cable.

SECTION III. OPERATION
Paragraph 3-4. Delete the reference to binary gray shade control.
Figure 3-1. Delete reference to the Z-AXIS GRAY SHADE INPUT (18).
Paragraph 3-13. Delete the last two sentences refering to reversal of TTL Blanking polarity.
Delete paragraph 3-14 and Table 3-1.
Delete paragraph 3-15. Option 003 is covered in special documentation.
Delete Figures 3-6 and 3-7.

SECTION V. ADJUSTMENTS
Place pages 7-5 and 7-6 into SECTION V as pages 5-8a and 5-8b.

SECTION VI. REPLACEABLE PARTS
Place pages 7-7 through 7-10 into SECTION VI as pages 6-18a through 6-18d.

SECTION VIII. SERVICE
Place pages 7-11 and 7-12 into SECTION VIII as pages 8-8a and 8-8b.

CHANGE 2

Table 6-2. Replaceble Parts.
Delete: FL1, FILTER-POWER LINE INPUT, 9135-0046.
Change: T1, TRANSFORMER-POWER, HP and Mfr Part No. to 9100-2665 CD7.
This part is unavailable but is directly replaced by the part presently in use (9100-4254).

Page 8-15, Schematic 7.
Change: Schematic 7 per Figure 7-1.

Page 8-17, Schematic 8.
Delete: FL1 in primary power circuitry.

CHANGE 3

Table 6-2. Replaceable Parts.
Change: A5, HP and Mfr Part No. to 01311-66505 CD2.
Change: A5R12, HP and Mfr Part No. to 0757-0288 CD1 QTY1, RESISTOR 9.09K 1% .125W.
Change: A5R18, HP and Mfr Part No. to 0698-3151 CD7 QTY1, RESISTOR 2.87K 1% .125W.
Change: A5R25, HP and Mfr Part No. to 0757-0290 CD5 QTY2, RESISTOR 6.19K 1% .125W.
Change: A5R26, HP and Mfr Part No. to 0757-0290 CD5 RESISTOR 6.19K 1% .125W.
Change: A5R33, HP and Mfr Part No. to 0757-0274 CD5 QTY2, RESISTOR 1.21K 1% .125W.
Change: A5R34, HP and Mfr Part No. to 0757-0274 CD5 RESISTOR 1.21K 1% .125W.
Change: A5R37, HP and Mfr Part No. to 0757-0420 CD3 QTY1, RESISTOR 750 1% .125W.
Change: A5R43, HP and Mfr Part No. to 0757-0444 CD1 QTY2, RESISTOR 12.1K 1% .125W.
Change: A5R45, HP and Mfr Part No. to 0757-0283 CD6 QTY2, RESISTOR 2K 1% .125W.
Change: A5R50, HP and Mfr Part No. to 0757-0455 CD4 QTY1, RESISTOR 36.5K 1% .125W.
Delete: A5R89 and A5R90.

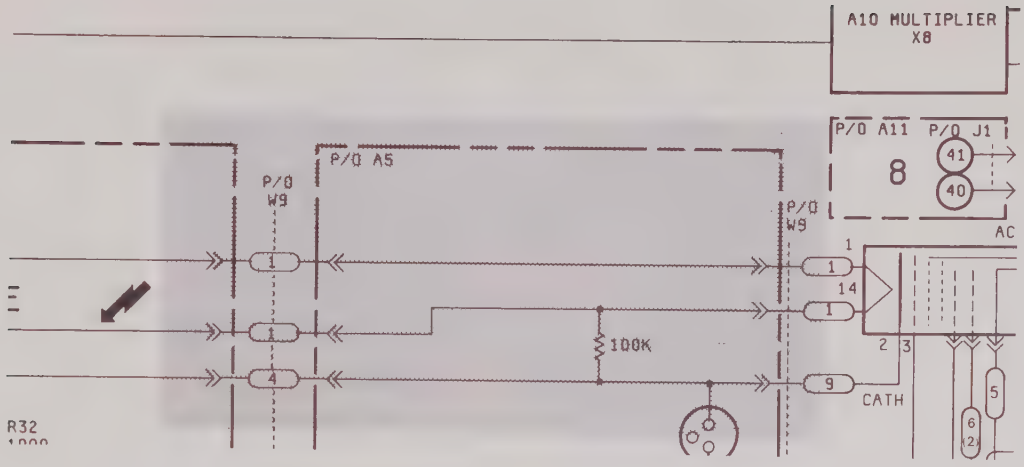

Figure 7-1. Changes to Schematic 7, page 8-15.

Service Sheet 4, Z-Axis Amplifier, page 8-9.
From left to right:
Delete: R89, replace with a line.
Change: R12 to 9090.
Change: R18 to 2870.
Change: R25 and R26 to 6190.
Change: R33 and R34 to 1210.
Change: R37 to 750.
Delete: R90, replace with a line.
Change: R43 to 12.1K.
Change: R45 to a fixed resistor, 2000 ohms.
Change: R50 to 36.5K.

CHANGE 4

Table 6-2. Replaceable Parts.
Change: A9, HP and Mfr Part No. to 01311-66504 CD1 (TWO PLACES).
Add: A9C26, Hp and Mfr Part No. 0180-0094 CD4 QTY2 CAPACITOR-FXD 100UF +75-10% 25VDC AL.
Add: A9C27, Hp and Mfr Part No. 0180-0094 CD4 QTY0 CAPACITOR-FXD 100UF +75-10% 25VDC AL.
Change: A9CR1, QTY to 5.
Add: A9CR6, CR17, and CR18 Same as A9CR1 except QTY is blank.
Change: A9R14, HP and Mfr Part No. to 0757-0273 CD4 QTY1, RESISTOR 3.01K 1% .125W.
Change: A9R15, HP and Mfr Part No. to 0757-0440 CD7 QTY1, RESISTOR 7.5K 1% .125W.
Change: A9R16, QTY to 2.
Add: A9R43, HP and Mfr Part No. to 0757-0446 CD3 QTY1, RESISTOR 15K 1% .125W.

Page 8-14, A9 Component Locator.
Change: Add or change per Figure 7-2 (C26, C27,CR6, CR17, CR18, R14, R15, R43).

Page 8-15, Schematic 7.
Change: Add or change circuitry per Figure 7-3 (C11, C26, C27, CR6, CR17, CR18, R14, R15, R43).

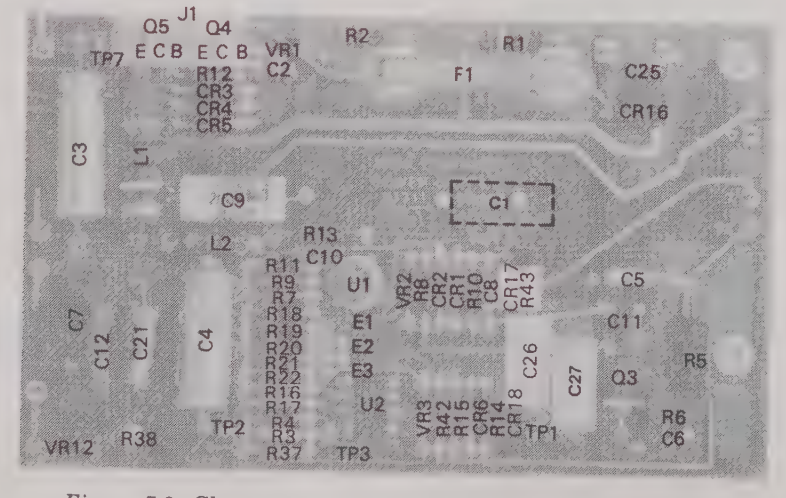

Figure 7-2. Changes to A9 Component Locator, page 8-14.

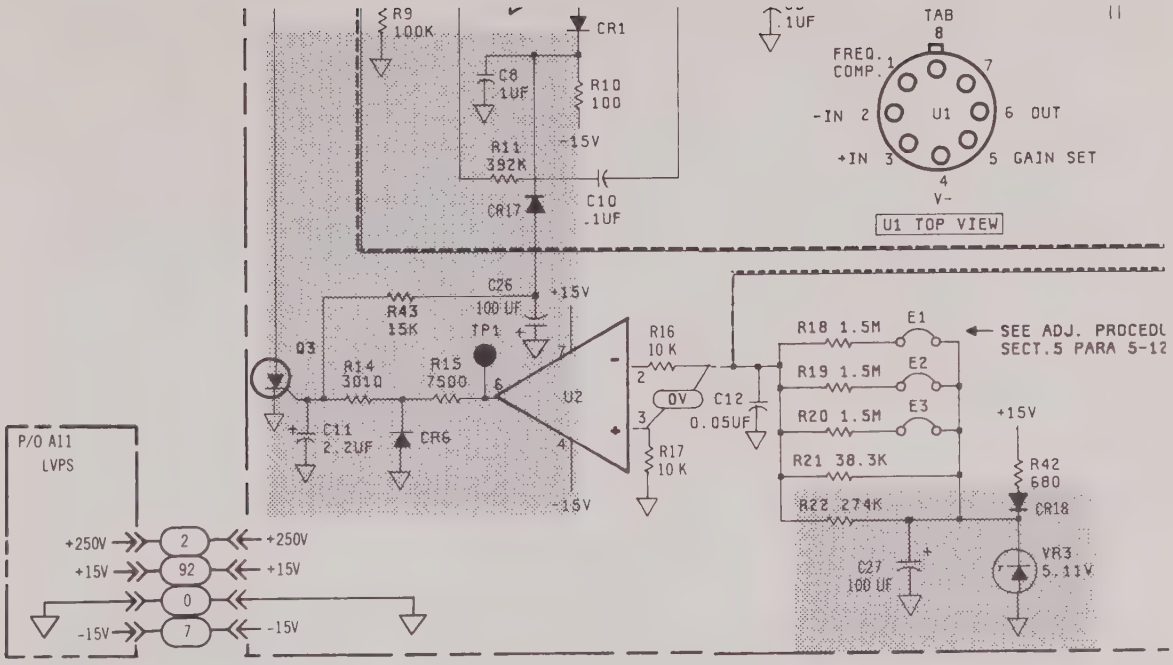

Figure 7-3. Changes to Schematic 7, page 8-15.

5-13. Z-AXIS BALANCE ADJUSTMENTS.

REFERENCE:
Service Sheet 4.

DESCRIPTION:
The Z-axis amplifier balance (A5R13) is adjusted so that there is a 3 V increase in Z-axis amplifier output as the front panel INTENSITY control is rotated from minimum to maximum.

EQUIPMENT:
Digital Voltmeter

PROCEDURE:

a. Remove power and turn off phosphor protect switch (A8S1).

b. Disable high voltage oscillator by removing A9F1.

c. Preset all adjustments on the Z-axis board (A5) to midrange and the front-panel INTENSITY control fully CCW.

d. Apply power to the display.

e. Adjust Z-axis offset (A5R19) for approximately 20 V at the Z-axis output (A5TP1).

f. Monitor the Z-axis output (A5TP1) with the digital voltmeter and rotate the front panel INTENSITY control to minimum (fully ccw).

g. Adjust the Z-axis balance (A5R13) such that a 3 V increase is noted at the Z-axis output (A5TP1) as the front panel INTENSITY control is rotated from minimum to maximum.

NOTE

The amplifier offset will change when the balance is adjusted. After each balance adjustment recheck the Z-axis output voltage change by varying the front panel INTENSITY from minimum to maximum setting.

5-14. Z-AXIS GAIN, OFFSET, AND INTENSITY LIMIT ADJUSTMENTS.

REFERENCE:
Service Sheet 4.

DESCRIPTION:
The intensity limit and offset adjustments provide proper CRT grid bias as defined by the CRT cutoff voltage. The gain adjustment provides the proper CRT grid drive as defined by the CRT cutoff voltage.

EQUIPMENT:
Monitor Oscilloscope
Pulse Generator
Digital Voltmeter
Low Capacitance 50:1 Divider Probe

PROCEDURE:

a. Readjust Z-axis offset (A5R19) for 20 V at the Z-axis output (A5TP1).

b. Set intensity limit (A9R38) for maximum voltage at A9C21.

c. Turn off power and enable high voltage oscillator by replacing A9F1.

d. Apply power and adjust intensity limit (A9R38) for a dimly visable dot on the screen.

e. Record the voltage at A9C21 and the Z-axis output (A5TP1). The difference between the two voltages is the CRT cutoff voltage.

$$\text{CRT cutoff voltage} = V_{\text{at A9C21}} - V_{\text{at A5TP1}}$$

f. Position the beam off-screen and apply a 10 kHz +1 V, 1 microsecond wide (1% duty cycle) pulse to the Z-INPUT.

g. Set front panel INTENSITY control (A13R1) fully cw and monitor the Z-axis output (A5TP1) with the monitor oscilloscope (use 50:1 divider probe).

h. Adjust the Z-axis gain (A5R14) and Z-axis offset (A5R19) for a peak-to-peak amplitude signal equal to 75% of the CRT cutoff voltage or 47 V, whichever is less (see step e for CRT cutoff voltage).

i. Adjust Z-axis offset (A5R19) such that the positive position of the pulse is just equal to the maximum Z-axis output, maintaining the same peak-to-peak amplitude obtained in step h (see figure 5-5).

Figure 7-4. Z-axis Gain and Offset Adjustment

j. Apply 10 kHz, a 1 V p-p, 1 microsecond wide (1% duty cycle) pulse having a -1 V base line to the Z-axis INPUT. Position the beam on-screen and rotate the front panel INTENSITY control to minimum. Adjust the intensity limit (A9R38) for a visible, low intensity dot on the screen. Rotation of the front panel INTENSITY control towards maximum, or removal of the Z-axis input signal should produce a brighter dot. If not, recheck gain, offset, and balance adjustments.

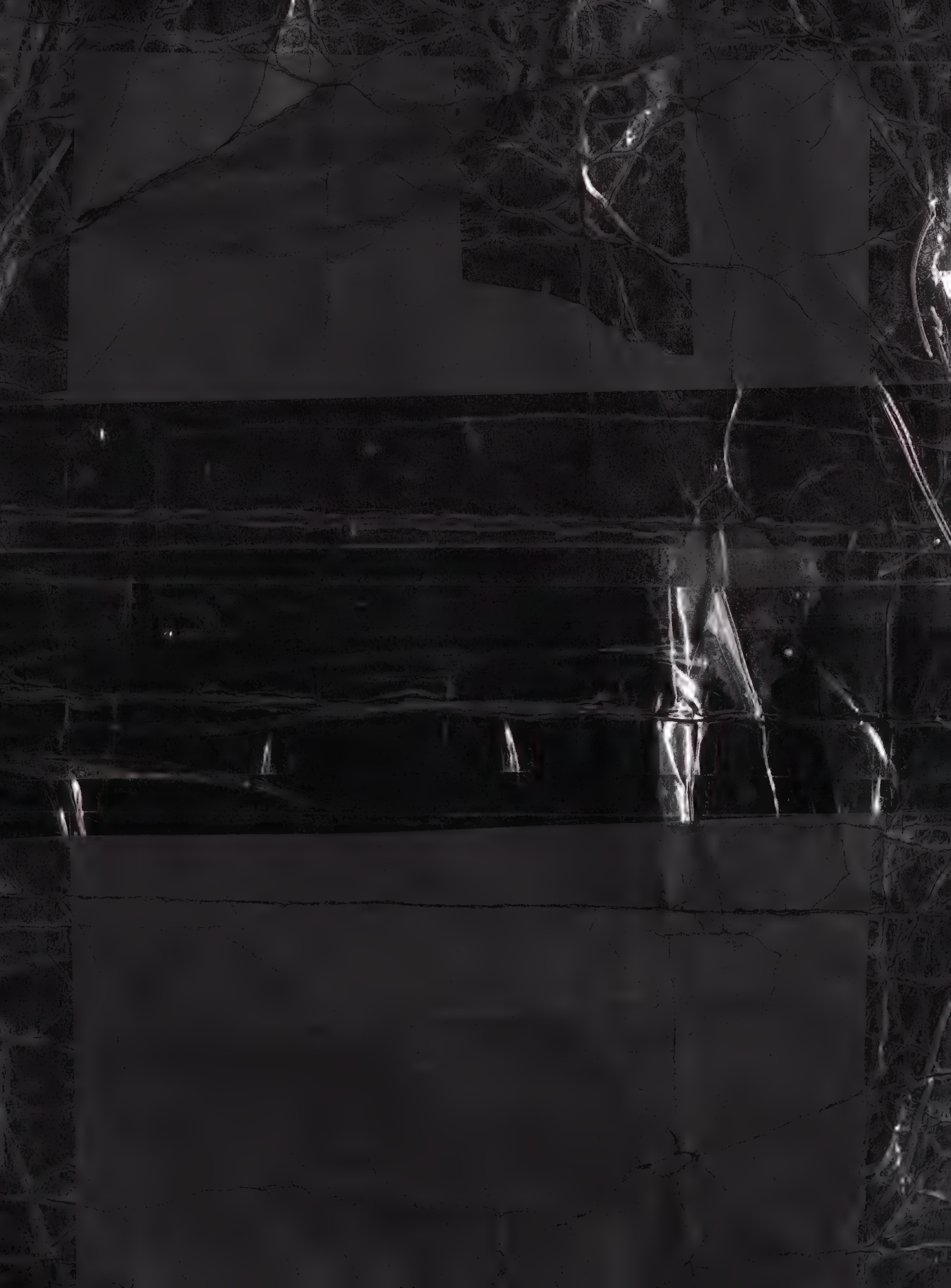

ADJUSTMENTS

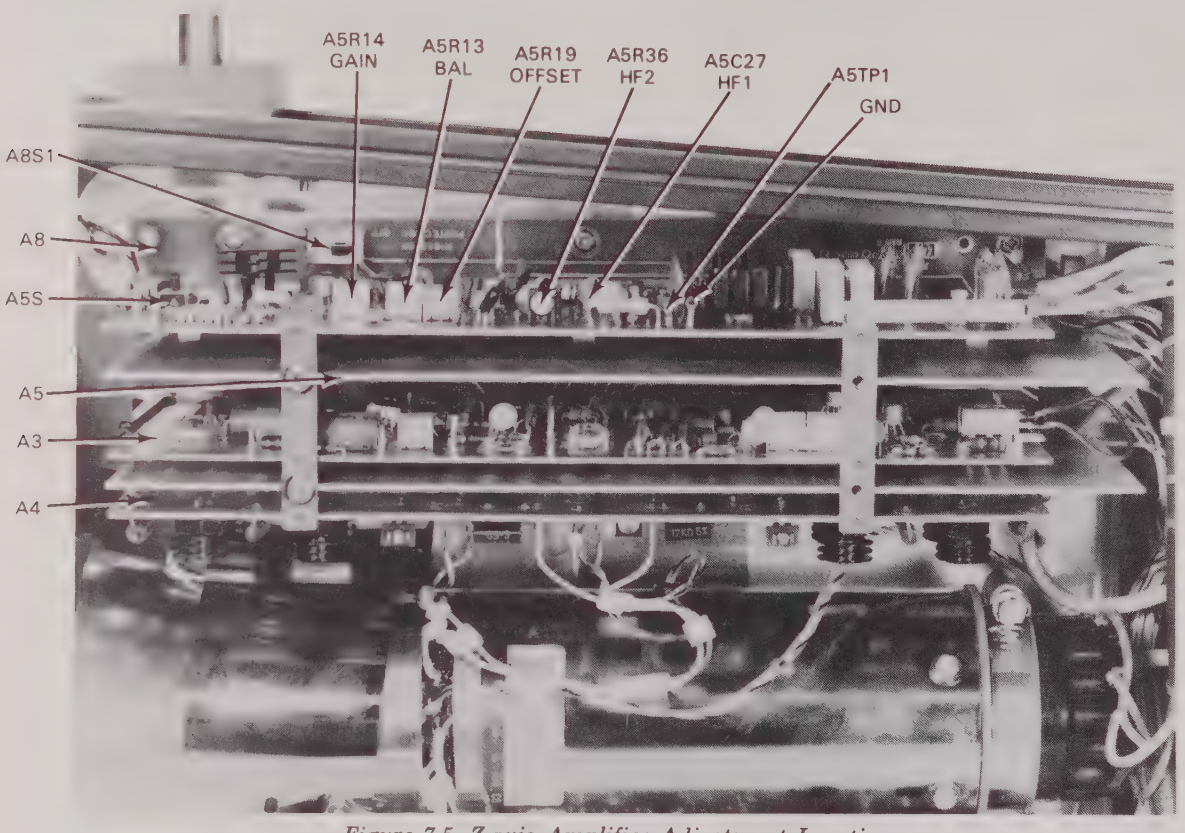

Figure 7-5. Z-axis Amplifier Adjustment Locations

Table 7-2. Z-axis Amplifier Adjustments

Reference Designator	Adjustment Name	Adjustment Paragraph	Service Sheet	Description
A5R19	Z-AXIS OFFSET	5-13	4	Adjust Z-OFFSET for 20 V output at Z-AXIS output (A5TP1)
A5R13	Z-AXIS BALANCE	5-13	4	Adjust for 3 V increase at Z-AXIS output when intensity control is turned from minimum to maximum
A9R38	INTENSITY LIMIT	5-14	7	Adjust for dimly visible dot on screen with INTENSITY at minimum and 1 V p-p at Z-AXIS input
A5R14	Z-AXIS GAIN	5-14	4	Adjust to 75% of CRT cutoff or +47 V whichever is less (monitor at A5TP1)
A5R19	Z-AXIS OFFSET	5-14	4	Adjust so that positive portion of pulse is equal to maximum Z-AXIS output (monitor at A5TP1)
A5C27 A5R36	Z-AXIS HF1 Z-AXIS HF2	5-15	4	Adjust for pulse rise time of ≤25 ms

REPLACEMENT Z-AXIS ADJUSTMENT PROCEDURES FOR SERIAL PREFIX 1943A

(Backdate as page 5-8b)

Table 7-3. Replaceable Parts

Reference Designation	HP Part Number	C D	Qty	Description	Mfr Code	Mfr Part Number
A5	01311-66502	9	1	Z-AXIS BOARD ASSEMBLY	28480	01311-66502
A5C1	0160-2055	9	16	CAPACITOR-FXD .01UF +80-20% 100VDC CER	28480	0160-2055
A5C2	0160-2055	9		CAPACITOR-FXD .01UF +80-20% 100VDC CER	28480	0160-2055
A5C3	0160-2243	7	4	CAPACITOR-FXD 2.7PF +-.25PF 500VDC CER	28480	0160-2243
A5C4	0160-2055	9		CAPACITOR-FXD .01UF +80-20% 100VDC CER	28480	0160-2055
A5C5	0160-3508	9	4	CAPACITOR-FXD 1UF +80-20% 50VDC CER	28480	0160-3508
A5C6	0160-3508	9		CAPACITOR-FXD 1UF +80-20% 50VDC CER	28480	0160-3508
A5C7	0160-2243	7		CAPACITOR-FXD 2.7PF +-.25PF 500VDC CER	28480	0160-2243
A5C8	0160-2055	9		CAPACITOR-FXD .01UF +80-20% 100VDC CER	28480	0160-2055
A5C9	0160-2055	9		CAPACITOR-FXD .01UF +80-20% 100VDC CER	28480	0160-2055
A5C10	0160-3443	1	5	CAPACITOR-FXD .1UF +80-20% 50VDC CER	28480	0160-3443
A5C11	0160-2055	9		CAPACITOR-FXD .01UF +80-20% 100VDC CER	28480	0160-2055
A5C12	0160-2243	7		CAPACITOR-FXD 2.7PF +-.25PF 500VDC CER	28480	0160-2243
A5C13	0160-2243	7		CAPACITOR-FXD 2.7PF +-.25PF 500VDC CER	28480	0160-2243
A5C14	0160-2055	9		CAPACITOR-FXD .01UF +80-20% 100VDC CER	28480	0160-2055
A5C15	0160-2055	9		CAPACITOR-FXD .01UF +80-20% 100VDC CER	28480	0160-2055
A5C16	0140-0203	3	2	CAPACITOR-FXD 30PF +-5% 500VDC MICA	72136	DM15E300J0500WV1CR
A5C17	0140-0203	3		CAPACITOR-FXD 30PF +-5% 500VDC MICA	72136	DM15E300J0500WV1CR
A5C18	0160-2055	9		CAPACITOR-FXD .01UF +80-20% 100VDC CER	28480	0160-2055
A5C19	0160-2055	9		CAPACITOR-FXD .01UF +80-20% 100VDC CER	28480	0160-2055
A5C20	0160-2055	9		CAPACITOR-FXD .01UF +80-20% 100VDC CER	28480	0160-2055
A5C21	0160-2055	9		CAPACITOR-FXD .01UF +80-20% 100VDC CER	28480	0160-2055
A5C22	0160-4908	5	3	CAPACITOR-FXD 68UF +-10% 250VDC	28480	0160-4908
A5C23	0160-3460	2	2	CAPACITOR-FXD .05UF +80-20% 100VDC CER	28480	0160-3460
A5C24	0160-3460	2		CAPACITOR-FXD .05UF +80-20% 100VDC CER	28480	0160-3460
A5C25	0160-4908	5		CAPACITOR-FXD .68UF +-10% 250VDC	28480	0160-4908
A5C26	0160-4908	5			28480	0160-4908
A5C27	0121-0474	0	1	CAPACITOR-FXD .68UF +-10% 250VDC	28480	0121-0474
A5C28	0160-3960	7	1	CAPACITOR-FXD .68UF +-10% 250VDC	28480	0160-3960
A5C29	0160-2055	9		CAPACITOR-V TRMR-PSTN 0.25 - 1.25PF 600V	28480	0160-2055
A5C30	0160-3443	1		CAPACITOR-FXD .1UF +80-20% 50VDC CER	28480	0160-3443
A5C31	0180-0374	3	2	CAPACITOR-FXD 10UF+-10% 20VDC TA	56289	150D106X902082
A5C32	0160-3443	1		CAPACITOR-FXD .1UF +80-20% 50VDC CER	28480	0160-3443
A5C33	0180-0374	3		CAPACITOR-FXD 10UF+-10% 20VDC TA	56289	150D106X902082
A5C34	0160-3443	1		CAPACITOR-FXD .1UF +80-20% 50VDC CER	28480	0160-3443
A5C35	0160-3508	9		CAPACITOR-FXD 1UF +80-20% 50VDC CER	28480	0160-3508
A5C36	0160-3508	9		CAPACITOR-FXD 1UF +80-20% 50VDC CER	28480	0160-3508
A5C37	0160-3443	1		CAPACITOR-FXD .1UF +80-20% 50VDC CER	28480	0160-3443
A5C38	0160-2055	9		CAPACITOR-FXD .01UF +80-20% 100VDC CER	28480	0160-2055
A5C39	0160-2055	9		CAPACITOR-FXD .01UF +80-20% 100VDC CER	28480	0160-2055
A5C41	0160-2055	9		CAPACITOR-FXD .01UF +80-20% 100VDC CER	28480	0160-2055
A5CR1	1901-0376	6	4	DIODE-GEN PRP 35V 50MA DO-35	28480	1901-0376
A5CR2	1901-0376	6		DIODE-GEN PRP 35V 50MA DO-35	28480	1901-0376
A5CR3	1901-0376	6		DIODE-GEN PRP 35V 50MA DO-35	28480	1901-0376
A5CR4	1901-0376	6		DIODE-GEN PRP 35V 50MA DO-35	28480	1901-0376
A5CR5	1906-0042	3	1	DIODE-DUAL 70V VF DIFF=10MV	28480	1906-0042
A5CR6	1901-0040	1	3	DIODE-SWITCHING 30V 50MA 2NS DO-35	28480	1901-0040
A5CR7	1901-0045	6	2	DIODE-PWR RECT 100V 750MA DO-29	28480	1901-0045
A5CR8	1901-0045	6		DIODE-PWR RECT 100V 750MA DO-29	28480	1901-0045
A5CR9	1901-0040	1		DIODE-SWITCHING 30V 50MA 2NS DO-35	28480	1901-0040
A5CR10	1901-0040	1		DIODE-SWITCHING 30V 50MA 2NS DO-35	28480	1901-0040
A5CR11	1901-0050	3	2	DIODE-SWITCHING 80V 200MA 2NS DO-35	28480	1901-0050
A5CR12	1901-0050	3		DIODE-SWITCHING 80V 200MA 2NS DO-35	28480	1901-0050
	1251-0206	2	2	CONNECTOR-SGL CONT SKT .04-IN-BSC-SZ RND	28480	1251-0206
A5L1	9140-0210	1	2	COIL-MLD 100UH 5% Q=50 .155DX.375LG-NOM	28480	9140-0210
A5L2	9140-0210	1		COIL-MLD 100UH 5% Q=50 .155DX.375LG-NOM	28480	9140-0210
A5MP1	1205-0213	4	1	HEAT SINK SGL TO-5/TO-39-CS	28480	1205-0213
A5MP2	1205-0235	0	1	HEAT SINK SGL TO-18-CS	28480	1205-0235
A5MP3	01300-21102	8	1	HEAT SINK-CLAMP	28480	01300-21102
A5MP4	01300-21103	9	1	HEAT SINK-BASE	28480	01300-21103
A5MP5	1205-0226	9	1	HEAT SINK SGL TO-5/TO-39-CS	28480	1205-0226
A5Q1	1855-0262	0	1	TRANSISTOR-JFET DUAL N-CHAN D-MODE SI	28480	1855-0262
A5Q2	1853-0316	1	2	TRANSISTOR-DUAL PNP PD=500MW	28480	1853-0316
A5Q3	1854-0280	0	1	TRANSISTOR-DUAL NPN PD=400MW	28480	1854-0280
A5Q5	1854-0260	6	1	TRANSISTOR NPN 2N3227 SI TO-18 PD=360MW	04713	2N3227
A5Q6	1853-0089	5	1	TRANSISTOR PNP 2N4917 SI PD=200MW	07263	2N4917
A5Q7	1853-0232	0	1	TRANSISTOR PNP SI TO-39 PD=1W FT=200MHZ	28480	1853-0232
A5Q8	1854-0419	7	2	TRANSISTOR NPN SI TO-39 PD=1W FT=200MHZ	28480	1854-0419
A5Q9	1853-0316	1		TRANSISTOR-DUAL PNP PD=500MW	28480	1853-0316
A5Q10	1854-0221	9	1	TRANSISTOR-DUAL NPN PD=750MW	28480	1854-0221
A5Q11	1854-0419	7		TRANSISTOR NPN SI TO-39 PD=1W FT=200MHZ	28480	1854-0419

REPLACEMENT Z-AXIS PARTS LIST FOR SERIAL PREFIX 1943A

(Backdate as page 6-18a)

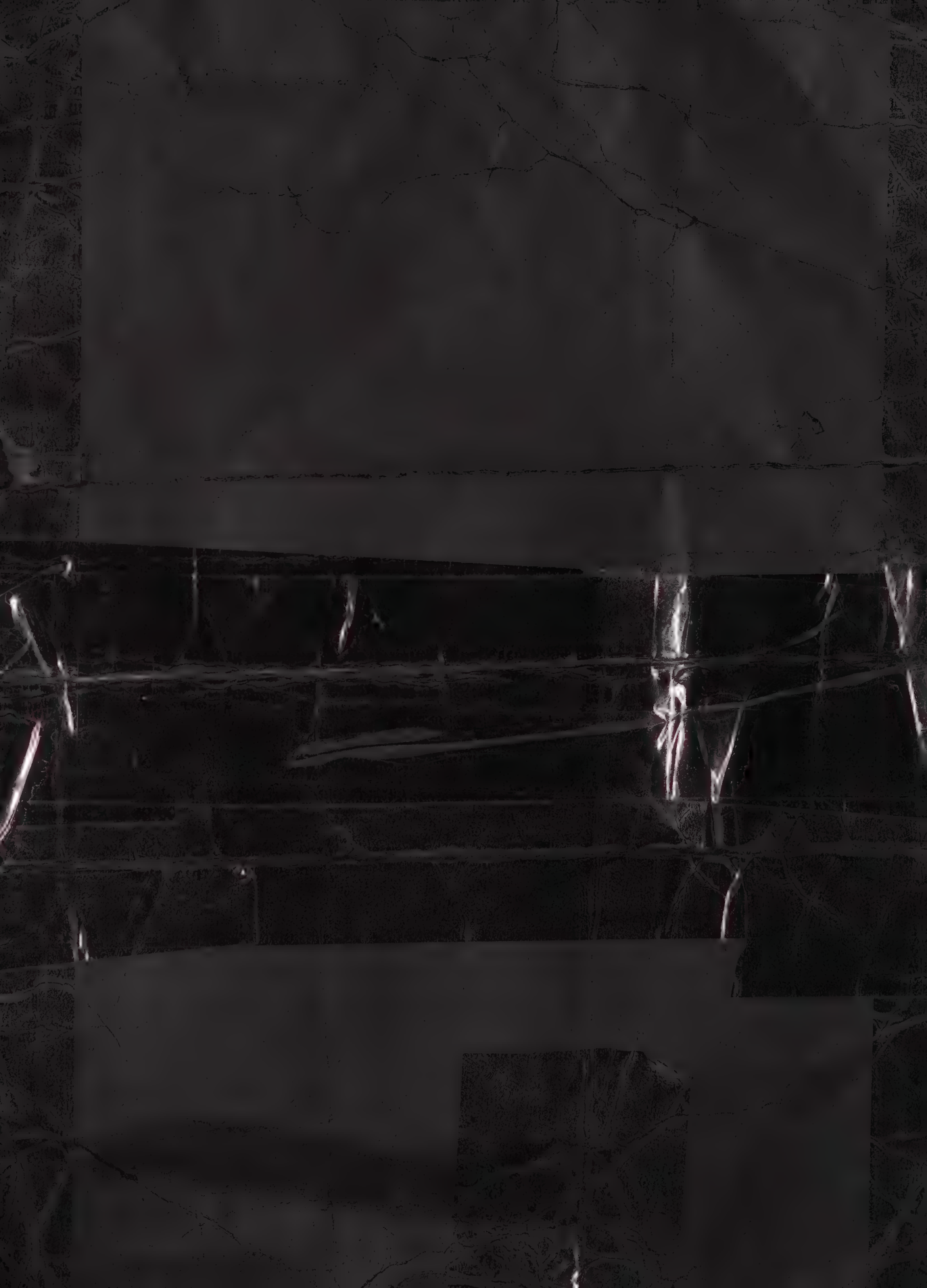

5-15. Z-AXIS PULSE RESPONSE.

REFERENCE:
Service Sheet 4

DESCRIPTION:
The high frequency response adjustments (A5C27, A5R36) trim the Z-axis amplifier pulse response for a fast rise time consistent with minimum overshoot (rise time = ≤25 microseconds, overshoot typically is ≤5%).

EQUIPMENT:
Monitor Oscilloscope
Pulse Generator
Low Capacitance 50:1 Divider Probe

PROCEDURE:

a. Position beam off-screen and apply 10 kHz, a +1 V, 1 microsecond wide (1% duty cycle) pulse to the Z-axis INPUT.

b. Set front panel INTENSITY CCW.

c. Connect the monitor oscilloscope to the Z-axis output (A5TP1). Use the 50:1 divider probe.

d. Monitor the oscilloscope and adjust HF1 (A5C27) and HF2 (A5R36) to obtain a pulse of ≤25 nanosecond rise time with minimum perturbations (±5% typical).

Table 7-3. Replaceable Parts (Cont'd)

Reference Designation	HP Part Number	C D	Qty	Description	Mfr Code	Mfr Part Number
A5R1	0757-0442	9	4	RESISTOR 10K 1% .125W F TC=0+-100	24546	C4-1/8-T0-1002-F
A5R2	0698-7648	5	1	RESISTOR 50 1% .25W MO TC=0+-100	28480	0698-7648
A5R3	0757-0391	7	4	RESISTOR 39.2 1% .125W F TC=0+-100	24546	C4-1/8-T0-39R2-F
A5R4	0757-0391	7		RESISTOR 39.2 1% .125W F TC=0+-100	24546	C4-1/8-T0-39R2-F
A5R5	0757-0288	1	2	RESISTOR 9.09K 1% .125W F TC=0+-100	19701	MF4C1/8-T0-9091-F
A5R6	0757-0288	1		RESISTOR 9.09K 1% .125W F TC=0+-100	19701	MF4C1/8-T0-9091-F
A5R7	0757-0415	6	2	RESISTOR 475 1% .125W F TC=0+-100	24546	C4-1/8-T0-475R-F
A5R8	0757-0415	6		RESISTOR 475 1% .125W F TC=0+-100	24546	C4-1/8-T0-475R-F
A5R9	0757-0431	6	1	RESISTOR 2.43K 1% .125W F TC=0+-100	24546	C4-1/8-T0-2431-F
A5R10	0757-0418	9	1	RESISTOR 619 1% .125W F TC=0+-100	24546	C4-1/8-T0-619R-F
A5R11	0757-0434	9	1	RESISTOR 3.65K 1% .125W F TC=0+-100	24546	C4-1/8-T0-3651-F
A5R12	0698-3150	6	1	RESISTOR 2.37K 1% .125W F TC=0+-100	24546	C4-1/8-T0-2371-F
A5R13	2100-3353	8	1	RESISTOR-TRMR 20K 10% C SIDE-ADJ 1-TRN	32997	3386X-Y46-203
A5R14	2100-3352	7	1	RESISTOR-TRMR 1K 10% C SIDE-ADJ 1-TRN	28480	2100-3352
A5R15	0757-0442	9		RESISTOR 10K 1% .125W F TC=0+-100	24546	C4-1/8-T0-1002-F
A5R16	0757-0416	7	1	RESISTOR 511 1% .125W F TC=0+-100	24546	C4-1/8-T0-511R-F
A5R17	0757-0719	3	1	RESISTOR 221 1% .25W F TC=0+-100	24546	C5-1/4-T0-221R-F
A5R18	0757-0720	6	1	RESISTOR 243 1% .25W F TC=0+-100	24546	C5-1/4-T0-243R-F
A5R19	2100-3426	6	1	RESISTOR-TRMR 20 10% C SIDE-ADJ 1-TRN	28480	2100-3426
A5R20	0757-0338	2	2	RESISTOR 1K 1% .25W F TC=0+-100	24546	C5-1/4-T0-1001-F
A5R21	0757-0338	2		RESISTOR 1K 1% .25W F TC=0+-100	24546	C5-1/4-T0-1001-F
A5R22	0698-3132	4	1	RESISTOR 261 1% .125W F TC=0+-100	24546	C4-1/8-T0-2610-F
A5R23	0757-0411	2	2	RESISTOR 332 1% .125W F TC=0+-100	24546	C4-1/8-T0-332R-F
A5R24	0757-0411	2		RESISTOR 332 1% .125W F TC=0+-100	24546	C4-1/8-T0-332R-F
A5R25	0698-3431	6	4	RESISTOR 23.7 1% .125W F TC=0+-100	03888	PME55-1/8-T0-23R7-F
A5R26	0698-3431	6		RESISTOR 23.7 1% .125W F TC=0+-100	03888	PME55-1/8-T0-23R7-F
A5R27	0757-0274	5	1	RESISTOR 1.21K 1% .125W F TC=0+-100	24546	C4-1/8-T0-1213-F
A5R28	0757-0408	7	3	RESISTOR 243 1% .125W F TC=0+-100	24546	C4-1/8-T0-243R-F
A5R29	0757-0408	7		RESISTOR 243 1% .125W F TC=0+-100	24546	C4-1/8-T0-243R-F
A5R30	0757-0403	2	2	RESISTOR 121 1% .125W F TC=0+-100	24546	C4-1/8-T0-121R-F
A5R31	0757-0403	2		RESISTOR 121 1% .125W F TC=0+-100	24546	C4-1/8-T0-121R-F
A5R32	0757-0442	9		RESISTOR 10K 1% .125W F TC=0+-100	24546	C4-1/8-T0-1002-F
A5R33	0757-0442	9		RESISTOR 10K 1% .125W F TC=0+-100	24546	C4-1/8-T0-1002-F
A5R34	0757-0443	7	1	RESISTOR 11K 1% 125W F TC=0+-100	28480	0757-0443
A5R35	0757-0441	8	1	RESISTOR 8.25K 1% .125W F TC=0+-100	24546	C4-1/8-T0-8251-F
A5R36	2100-2574	3	1	RESISTOR-TRMR 500 10% C SIDE-ADJ 1-TRN	30983	ET50X501
A5R37	0757-0449	6	1	RESISTOR 20K 1% .125W F TC=0+-100	24546	C4-1/8-T0-2002-F
A5R40	0757-0391	7		RESISTOR 39.2 1% .125W F TC=0+-100	24546	C4-1/8-T0-39R2-F
A5R41	0757-0391	7		RESISTOR 39.2 1% .125W F TC=0+-100	24546	C4-1/8-T0-39R2-F
A5R42	0757-0725	1	2	RESISTOR 475 1% .25W F TC=0+-100	24546	C5-1/4-T0-475R-F
A5R43	0757-0730	8	2	RESISTOR 750 1% .25W F TC=0+-100	24546	C5-1/4-T0-751-F
A5R44	0757-0730	8		RESISTOR 750 1% .25W F TC=0+-100	24546	C5-1/4-T0-751-F
A5R45	0757-0725	1		RESISTOR 475 1% .25W F TC=0+-100	24546	C5-1/4-T0-475R-F
A5R46	0757-0845	6	1	RESISTOR 18.2K 1% .5W F TC=0+-100	28480	0757-0845
A5R47	0698-3417	8	1	RESISTOR 23.7K 1% .5W F TC=0+-100	28480	0698-3417
A5R48	0698-3431	6		RESISTOR 23.7 1% .125W F TC=0+-100	03888	PME55-1/8-T0-23R7-F
A5R49	0698-3431	6		RESISTOR 23.7 1% .125W F TC=0+-100	03888	PME55-1/8-T0-23R7-F
A5R50	0761-0076	4	2	RESISTOR 18K 5% 1W MO TC=0+-200	28480	0761-0076
A5R51	0761-0076	4		RESISTOR 18K 5% 1W MO TC=0+-200	28480	0761-0076
A5R52	0761-0016	2	1	RESISTOR 7.5K 5% 1W MO TC=0+-200	28480	0761-0016
A5R53	0687-4721	6	1	RESISTOR 4.7K 10% .5W CC TC=0+647	01121	EB4721
A5R54	0687-1051	9	1	RESISTOR 1M 10% .5W CC TC=0+1000	01121	EB1051
A5R55	0757-0465	6	3	RESISTOR 100K 1% .125W F TC=0+-100	24546	C4-1/8-T0-1003-F
A5R56	0757-0280	3	3	RESISTOR 1K 1% .125W F TC=0+-100	24546	C4-1/8-T0-1001-F
A5R57	0757-0408	7		RESISTOR 243 1% .125W F TC=0+-100	24546	C4-1/8-T0-243R-F
A5R58	0757-0461	2	1	RESISTOR 68.1K 1% .125W F TC=0+-100	24546	C4-1/8-T0-6812-F
A5R59	0757-0283	6	1	RESISTOR 2K 1% .125W F TC=0+-100	24546	C4-1/8-T0-2001-F
A5R60	0757-0465	6		RESISTOR 100K 1% .125W F TC=0+-100	24546	C4-1/8-T0-1003-F
A5R61	0757-0473	6	2	RESISTOR 221K 1% .125W F TC=0+-100	24546	C4-1/8-T0-2213-F
A5R62	0757-0280	3		RESISTOR 1K 1% .125W F TC=0+-100	24546	C4-1/8-T0-1001-F
A5R63	0757-0465	6		RESISTOR 100K 1% .125W F TC=0+-100	24546	C4-1/8-T0-1003-F
A5R64	0757-0473	6		RESISTOR 221K 1% .125W F TC=0+-100	24546	C4-1/8-T0-2213-F
A5R65	0687-2711	0	1	RESISTOR 270 10% .5W CC TC=0+529	01121	EB2711
A5R66	0757-0280	3		RESISTOR 1K 1% .125W F TC=0+-100	24546	C4-1/8-T0-1001-F
A5S1	3101-1341	3	1	SWITCH-SL SPDT SUBMIN .5A 125VAC/DC	28480	3101-1341
A5U1	1820-0427	6	1	IC MODULATOR TO-100	04713	MC1496G
A5U2	1820-0352	6	1	TRANSISTOR ARRAY	01928	CA3018
A5U3	1820-0681	4	1	IC GATE TTL 8 NAND QUAD 2-INP	01295	SN74800N
A5V1	2140-0008	8	7	LAMP-GLOW NIA 115/59VDC 500UA T-2-BULB	28480	2140-0008
A5V2	2140-0008	8		LAMP-GLOW NIA 115/59VDC 500UA T-2-BULB	28480	2140-0008
A5V3	2140-0008	8		LAMP-GLOW NIA 115/59VDC 500UA T-2-BULB	28480	2140-0008
A5V4	2140-0008	8		LAMP-GLOW NIA 115/59VDC 500UA T-2-BULB	28480	2140-0008
A5V5	2140-0008	8		LAMP-GLOW NIA 115/59VDC 500UA T-2-BULB	28480	2140-0008

REPLACEMENT Z-AXIS PARTS LIST FOR SERIAL PREFIX 1943A

(Backdate as page 6-18b)

Table 7-3. Replaceable Parts (Cont'd)

Reference Designation	HP Part Number	C D	Qty	Description	Mfr Code	Mfr Part Number
A5V6	2140-0008	8		LAMP-GLOW A1A 115/59VDC 500UA T-2-BULB	28480	2140-0008
A5V7	2140-0008	8		LAMP-GLOW A1A 115/59VDC 500UA T-2-BULB	28480	2140-0008
A5VR1	1902-3139	7	1	DIODE-ZNR 8.25V 5% DO-7 PD=.4W TC=+.053%	28480	1902-3139
A5VR2	1902-3149	9	1	DIODE-ZNR 9.09V 5% DO-7 PD=.4W TC=+.057%	28480	1902-3149
A5VR3	1902-0184	6	1	DIODE-ZNR 16.2V 5% DO-7 PD=.4W TC=+.066%	28480	1902-0184
A5VR4	1902-0041	4	2	DIODE-ZNR 5.11V 5% DO-7 PD=.4W TC=-.009%	28480	1902-0041
A5VR5	1902-0041	4		DIODE-ZNR 5.11V 5% DO-7 PD=.4W TC=-.009%	28480	1902-0041

REPLACEMENT Z-AXIS PARTS LIST FOR SERIAL PREFIX 1943A

(Backdate as page 6-18c/6-18d blank)

8-32. SERVICE SHEET 4 PRINCIPLES OF OPERATION.

8-33. IMPEDANCE CONVERTER AND GAIN CONTROL (A5Q1, A5U1).

Q1 is a high input impedance source follower that provides unity gain with respect to the input signal. The signal from the source followers Q1 is applied to gain control circuit U1. (See figure 8-10 for the following discussion of the gain control circuit.)

Q1 and Q2 comprise the current source for the Z-axis gain control circuit (U1). R13 balances the current paths I1 and I2. Collector circuits of Q5, Q7 and Q6, Q8 make up the differential signal path to Q2A and Q2B. The front panel INTENSITY control sets the current differential between I3 and I4. During the low gain condition (large signal input) current paths I3 and I4 are approximately equal. During the high gain condition (low input signal) current paths I3 and I4 equal current path I2.

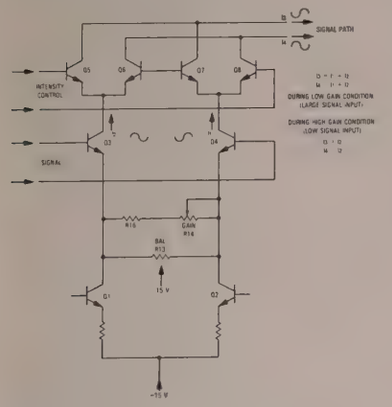

Figure 7-6. Simplified Schematic of Z-axis Gain Control

The output of the gain control circuit is fed to shunt-feedback amplifiers Q2A and Q2B. Transistor array U2 consists of four separate transistors (U2Q1 to U2Q4). U2Q1 is connected as a current source that supplies current to U2Q2 and U2Q3. U2Q3 provides signal current for the dynamic focus amplifier. U2Q2 and Q2B are connected in a cascade amplifier configuration and provide signal drive to the Z-axis output amplifier.

8-34. Z-AXIS OUTPUT AMPLIFIER (A5Q5 through A5Q8).

Transistors Q5 and Q6 function as emitter followers, while Q7 and Q8 are a complementary pair. A feedback circuit is provided through C27 and R52 with C27 providing adjustment for the fast corners of the output signal. Slower compensation is provided by network C17 and R36. CR7 and CR8 are high current diodes and provide protection for the output amplifiers against arcs and transients. The output of the Z-axis amplifier is applied to grid level translator on the high-voltage power supply assembly (A9) where it establishes the potential difference between the CRT grid and cathode (see service sheet 7).

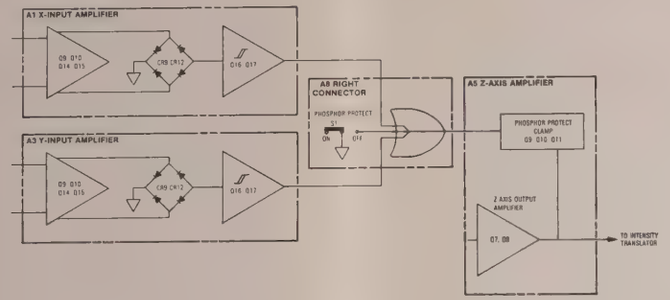

Figure 7-7. Simplified Block Diagram of the Phosphor Protection Circuit

8-35. PHOSPHOR PROTECTION.

The purpose of the phosphor protection circuit is to prevent CRT phosphor or expansion mesh damage caused by a high intensity, slow moving or static beam. Refer to figure 8-11, schematics 2 and 4 for the following discussion of circuit details.

The phosphor protection control voltage is picked off at the collectors of Q8A/Q8B and is applied to emitter followers Q9 and Q10. The signal is amplified by Q14 and Q15 and rectified by bridge rectifier CR9-CR12. C19 provides filtering for the bridge rectifier circuit. The output of the bridge rectifier is a negative voltage that is proportional to the X-Y axis input voltage. Low frequency or low amplitude input signals will not provide sufficient negative voltage at C19 to turn off Q16. Q17, A5Q9A and A5Q10A will remain off for as long as Q16 remains turned on. A5C3D charges to approximately +2.5 V through A5Q9B, turning A5Q10B, A5Q11 on. As long as A5Q11 is conducting, the Z-axis output level is clamped to approximately +18 V, therefore limiting CRT beam current.

Automatic beam current limiting may not be desirable in some system applications. In such cases the phosphor protection circuit may be disabled by an internal switch (A8S1).

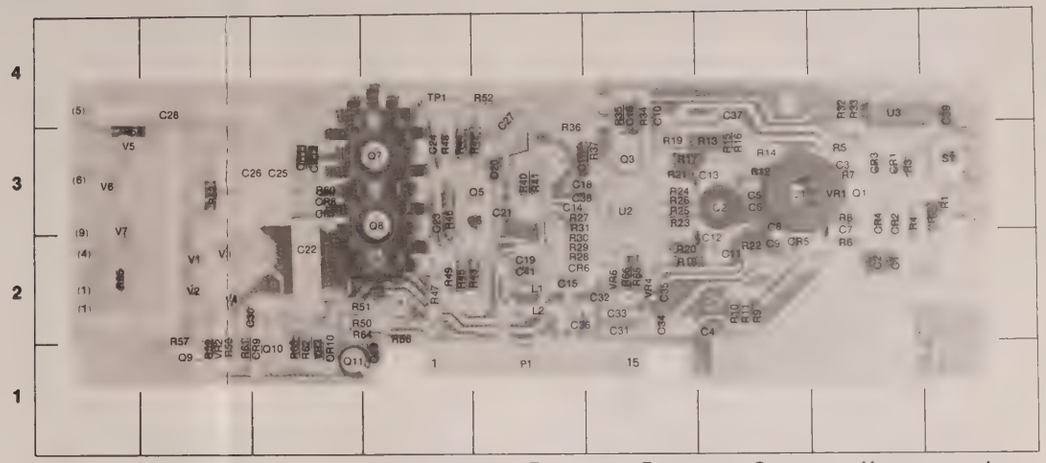

REF DESIG	GRID LOC	REF DESIG	GRID LOC	REF DESIG	GRID LOC	REF DESIG	GRID LOC	REF DESIG	GRID LOC	REF DESIG	GRID LOC	REF DESIG	GRID LOC	REF DESIG	GRID LOC	REF DES G	GRID LOC
C1	H-2	C18	E-3	C35	F-2	CR11	C-3	R2	I-3	R18	F-2	R34	F-4	R52	E-4	TP1	D-4
C2	H-2	C19	E-2	C36	E-1	CR12	C-3	R3	H-3	R19	F-3	R35	F-4	R53	B-3	U1	G-3
C3	H-3	C20	E-3	C37	G-4	L1	E-2	R4	H-3	R20	F-2	R36	E-3	R54	A-3	U2	F-3
C4	G-2	C21	E-3	C38	E-2	L2	E-2	R5	H-3	R21	F-3	R37	F-3	R55	A-2	U3	H-4
C5	G-3	C22	C-2	C39	I-4	P1	E-1	R6	H-2	R22	G-2	R40	E-3	R56	D-2	V1	B-2
C6	G-3	C23	D-3	C41	E-2	Q1	H-3	R7	H-3	R23	F-3	R41	E-3	R57	B-2	V2	B-2
C7	H-3	C24	D-3	CR1	H-3	Q2	G-3	R8	H-3	R24	F-3	R42	D-3	R58	B-1	V3	B-2
C8	G-3	C25	C-3	CR2	H-3	Q3	F-3	R9	G-2	R25	F-3	R43	D-2	R59	B-1	V4	B-2
C9	G-2	C26	B-3	CR3	H-3	Q5	E-3	R10	G-2	R26	F-3	R44	D-3	R60	C-3	V5	A-3
C10	F-4	C27	E-4	CR4	H-3	Q6	E-3	R11	G-2	R27	E-3	R45	D-2	R61	B-1	V6	A-3
C11	G-2	C28	B-4	CR5	G-2	Q7	D-3	R12	G-3	R28	E-2	R46	D-3	R62	C-1	V7	A-3
C12	G-2	C29	D-1	CR6	E-2	Q8	D-3	R13	G-3	R29	E-2	R47	D-2	R63	C-1	VR1	H-3
C13	G-3	C30	B-2	CR7	C-3	Q9	B-1	R14	G-3	R30	E-2	R48	D-3	R64	C-2	VR2	B-1
C14	E-3	C31	F-2	CR8	C-3	Q10	C-1	R15	G-3	R31	E-3	R49	D-2	R65	F-2	VR3	C-1
C15	E-2	C32	F-2	CR9	C-1	Q11	C-1	R16	G-3	R32	H-4	R50	C-2	R66	F-2	VR4	F-2
C16	F-4	C33	F-2	CR10	C-1	R1	I-3	R17	F-3	R33	H-4	R51	C-2	S1	I-3	VR5	F-2
C17	E-3	C34	F-2														

REPLACEMENT Z-AXIS SERVICE SHEET 4 FOR SERIAL PREFIX 1943A

(Backdate as page 8-8a)

Figure 7-8
Z-axis Amplifier (A5) Component Locator

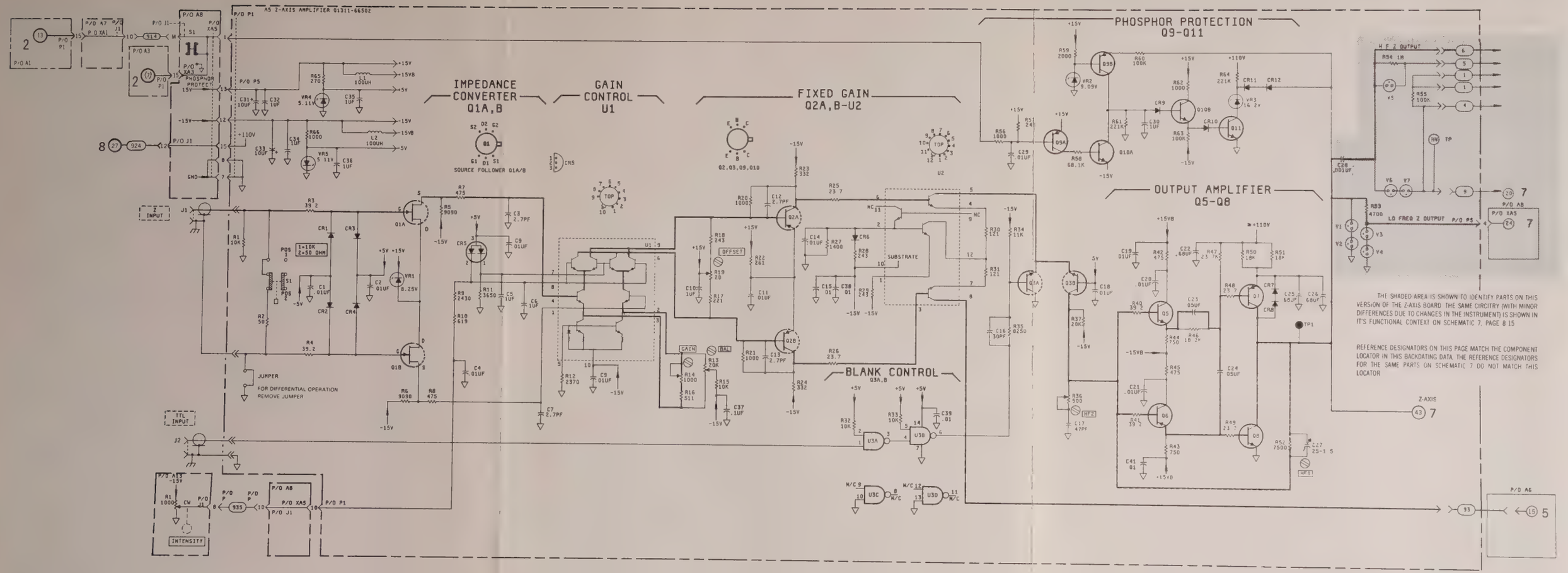

Figure 7-9. Service Sheet 4, Z-axis Amplifier (A5) Schematic

REPLACEMENT Z-AXIS SERVICE SHEET 4 FOR SERIAL PREFIX 1943A
(Backdate as page 8-8b)

REFER TO ANSI Y32.2 AND Y32.14 FOR SCHEMATIC SYMBOLS NOT LISTED IN THIS TABLE.

ETCHED CIRCUIT BOARD

ASSEMBLY

ETCHED CIRCUIT BOARD ON ASSEMBLY

VERNIER FRONT-PANEL MARKING

VERNIER REAR-PANEL MARKING

MAIN SIGNAL PATH

PRIMARY FEEDBACK PATH

SECONDARY FEEDBACK PATH

SINGLE-PIN CONNECTOR ON BOARD

A PIN OF A PLUG-IN BOARD (WITH LETTER OR NUMBER)

COAXIAL CABLE CONNECTED DIRECTLY TO BOARD

COAXIAL CABLE CONNECTED TO SNAP-ON JACK

FRONT-PANEL CONTROL

1 TEST POINT

SCREWDRIVER ADJUSTMENT

FERRITE BEAD

A COMMON ELECTRICAL POINT (WITH LETTER); NOT NECESSARILY GROUND

70 SIGNAL REFERENCE

9 SCHEMATIC REFERENCE

ZENER

LIGHT EMITTING DIODE (LED)

SCR (SILICON CONTROLLED RECTIFIER)

EARTH GROUND

CHASSIS GROUND

(925) WIRE COLORS ARE GIVEN BY ENCLOSED NUMBERS USING THE RESISTOR COLOR CODE

(925) IS WHT-RED-GRN
0 - BLACK
1 - BROWN
2 - RED
3 - ORANGE
4 - YELLOW
5 - GREEN
6 - BLUE
7 - VIOLET
8 - GRAY
9 - WHITE

* OPTIMUM VALUE SELECTED AT FACTORY, TYPICAL VALUE SHOWN; PART MAY HAVE BEEN OMITTED.

UNLESS OTHERWISE INDICATED ALL LOGIC ELEMENTS ARE OF THE TTL LOGIC FAMILY

UNLESS OTHERWISE INDICATED: RESISTANCE IN OHMS, CAPACITANCE IN PICOFARADS AND INDUCTANCE IN MICROHENRIES

CW	CLOCKWISE END OF VARIABLE RESISTOR
NC	NO CONNECTION
P/O	PART OF

VF (A) V - VOLTAGE
F - FILTERED
(A) - FILTER SOURCE

Figure 8-1. Schematic Diagram Symbols

SECTION VIII

SERVICE

8-1. INTRODUCTION.

8-2. This section provides instructions for troubleshooting and repairing the Model 1311B X-Y Display.

8-3. Detailed theory of operation and troubleshooting information are located opposite the schematics on foldout Service Sheets. The remainder of this section has general service information that should help you quickly service and repair the X-Y display.

8-4. THEORY OF OPERATION.

8-5. Overall theory of operation appears on pages opposite the block diagram (Service Sheet 1). Each section of the diagram refers to service sheets where detailed theory, schematics, and troubleshooting information are presented. Figure 8-1 explains any unusual symbols that appear on the schematics.

8-6. TROUBLESHOOTING.

WARNING

Read the Safety Summary at the front of this manual before troubleshooting the instrument.

8-7. INITIAL TROUBLESHOOTING PROCEDURE. Before troubleshooting the 1311B in detail, try to perform the adjustment procedures listed in Section V of this manual. Some apparent malfunctions may be corrected by these adjustments, or failure to obtain a correct adjustment will often reveal the source of trouble.

NOTE

Before performing any troubleshooting procedure, eliminate static charge from glass of the CRT faceplate by solidly grounding one hand while rubbing the CRT faceplate with the other hand.

8-8. DC VOLTAGES AND WAVEFORMS. DC voltages, waveforms, and conditions for making these measurements are given on, or adjacent to schematics on the service sheets. Since conditions for making measurements may differ from one circuit to another, always check the specific conditions listed for each schematic.

8-9. RECOMMENDED TEST EQUIPMENT.

8-10. Test equipment required to maintain the 1311B is listed in Section I, table 1-4. Equipment other than that listed may be used if it meets the listed critical specifications.

8-11. REPAIR.

8-12. ASSEMBLY REMOVAL. Instructions for removing major assemblies are contained in the service sheet instructions for that particular assembly. Before servicing the instrument, remove top and bottom covers. Refer to table 8-1 for the list of assemblies indexed to Service Sheets.

Table 8-1. Service Sheet Quick Reference

Assembly	Name	Service Sheet(s)
A1	X-input Amplifier	2
A2	X-output Amplifier	3
A3	Y-input Amplifier	2
A4	Y-output Amplifier	3
A5	Z-axis Amplifier	4, 7
A6	Dynamic Focus and Astigmatism	5, 6
A7	Left Connector Board	ALL
A8	Right Connector Board	ALL
A9	High Voltage Power Supply	7
A10	High Voltage Multiplier	7
A11	Low Voltage Power Supply	8
A12	Line Module	8
A13	Control Assembly	2,4,6,7,8
A14	Extender Board	N/A

8-13. PREVENTIVE MAINTENANCE. Painted surfaces can be cleaned with a commercial, spray-type window cleaner or with a mild soap and water solution.

CAUTION

Do not use chemical cleaning agents that might damage the plastics used in this instrument. Recommended cleaning agents are isopropyl alcohol, or a solution of 1% mild detergent and 99% water.

8-14. Corroded spots are best removed with soap and water. Stubborn residues can be removed with a fine abrasive. Protect such areas from further corrosion with an application of silicone resin such as GE DRIFILM 88.

8-15. CIRCUIT BOARDS.

8-16. BOARD CONNECTIONS. Square-pin connectors are identified on circuit boards by color code of connecting wire or by the signal name. Connector pins on plugs and jacks are identified by either a number or a letter. Coaxial wires are identified by different shrink-tubing colors.

8-17. SERVICING ETCHED CIRCUIT BOARDS. All the etched circuit boards have plated-through component holes. This allows components to be removed or replaced from either side of the board. When unsoldering large components such as potentiometers, rotate the soldering iron tip from lead to lead while applying pressure to the part to lift it from the board. HP Service Note M-20E contains additional information for repair of circuit boards.

8-18. SERVICE SHEET 1 BASIC PRINCIPLES OF OPERATION.

8-19. GENERAL.

The following paragraphs contain functional descriptions keyed to the simplified block diagram on the opposite page. The block diagram is drawn for function and does not show circuit details. Circuit details and circuit description are located on the schematics following the block diagram (schematic 1). Refer to table 8-1 for schematic identification.

8-20. DEFLECTION AMPLIFIERS.

The X and Y amplifier circuits are identical. They amplify the input signals to the necessary level to drive the CRT horizontal and vertical deflection plates. Each amplifier can be connected for positive, negative, or differential input with the input impedance selectable for 10 kohms or 50 ohms.

8-21. Z-AXIS AMPLIFIER.

The high voltage supply for the CRT grid is controlled by the Z-axis amplifier output level. Consequently, either the voltage applied at the Z-INPUT or the 3-bit binary word applied to the binary input, controls the CRT beam intensity. The Z-axis board can be strapped to permit blanking by either a positive or negative voltage at the Z-INPUT or a logic high (5 volts) or low (0 volts) at the TTL-INPUT. Blanking may also be performed by presenting the proper 3-bit binary word to the binary input port. Also selectable is either a standard beam intensity (contrast) or an offset beam intensity (brightness).

8-22. PHOSPHOR PROTECTION.

The phosphor protection circuits prevent CRT phosphor or mesh burns by static or slow moving beam. When a low frequency signal, or the absence of an input signal, is detected by either X or Y phosphor protection circuit, the output of the Z-axis amplifier is limited to approximately +18 V. This action in turn limits CRT grid drive. In some system applications, automatic beam current limiting may not be desirable. In such cases the phosphor protection circuit may be disabled by an internal switch (A8S1).

8-23. DYNAMIC FOCUS AND ASTIGMATISM.

The purpose of the dynamic focus and astigmatism circuits is to provide optimum focus of the displayed signals over the entire screen. Samples from the X and Y deflection amplifiers, proportional to the CRT beam position, drive the focus and astigmatism circuits. The astigmatism element is directly controlled by the output of the astigmatism driver. The output of the focus amplifier is applied to the focus level translator on the high voltage power supply assembly where it establishes operating potential for the CRT focus grid.

8-24. LOW VOLTAGE POWER SUPPLY.

The low voltage power supply converts the ac line input to three regulated dc power supplies, +250 V, +15 V, and −15 V. The +250 V and the −15 V supplies are adjustable and the +15 V supply is referenced to the −15 V supply. A separate dc supply, approximately 21.5 V, is provided for the high voltage oscillator.

8-25. HIGH VOLTAGE POWER SUPPLY.

The high voltage power supply provides the high operating potentials for the CRT: ≅ −4550 V for the cathode, a grid voltage referenced to the cathode, CRT filament voltage, and a post-accelerator potential of ≅24 kV. The high voltage power supply also contains a focus level translator circuit which, along with the dynamic focus amplifier, automatically adjusts the beam focus with changes in beam intensity and position.

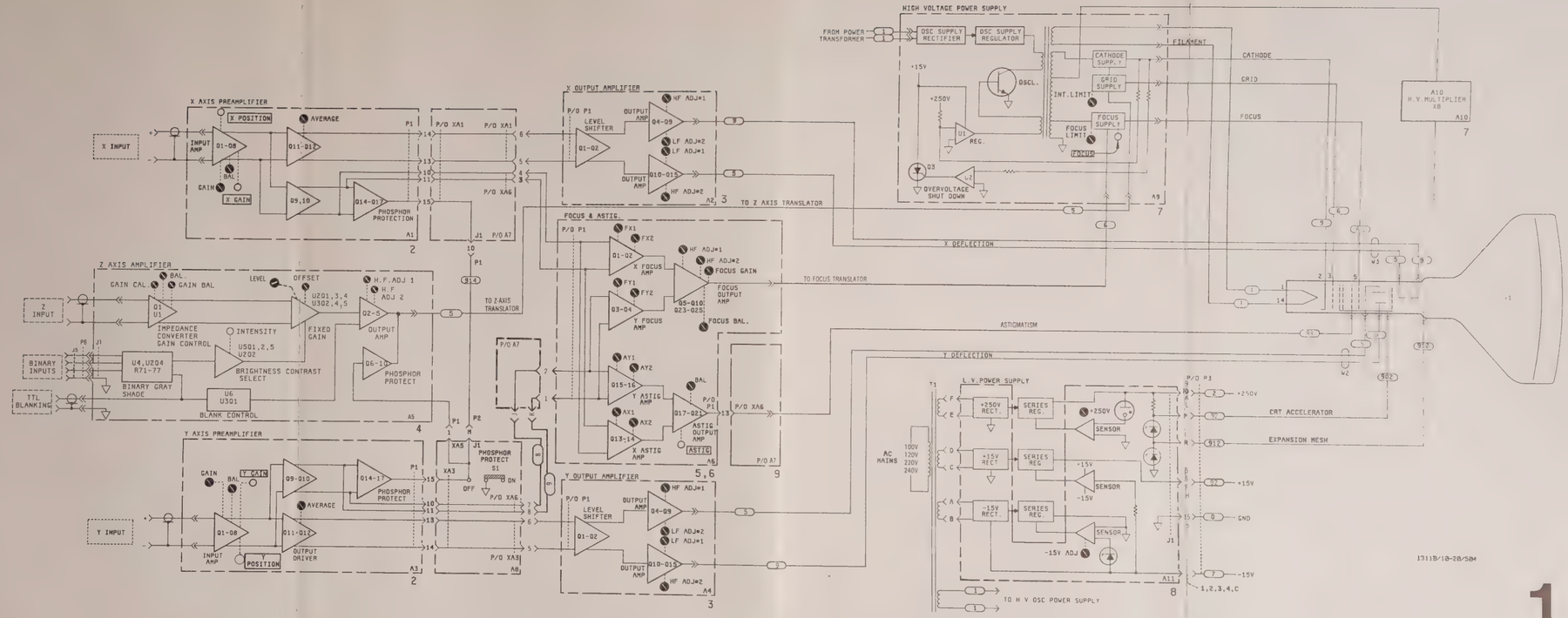

Figure 8-2.
Service Sheet 1, Overall Block Diagram

8-26. SERVICE SHEET 2 PRINCIPLES OF OPERATION.

8-27. INPUT AMPLIFIER AND GAIN CONTROL CIRCUIT (Q1A, Q1B).

Q1A and Q1B are high input impedance source followers that provide unity gain with respect to the input signal. The bias point of Q1 is determined by the FET characteristics (VP and IDSS) for the particular device.

VP = pinch off voltage

IDSS = drain current with drain to source voltage

= 0 V.

VS will be between 0 V and +5 V with the gate at 0 V.

8-28. GAIN CONTROL (U1, U2, Q5).

The signal from the source follower (Q1) is applied to the gain control circuit. (See figure 8-3 for the following discussion.)

U1Q3 and U1Q4 make up the current source for the gain control circuit. R11 balances current paths I1 and I2 in the absence of an input signal. R12 determines the current differential between I1 and I2 when a signal is applied. Collector circuit of U2Q2 and U2Q3 comprise the differential signal path to Q8. Collector of U2Q1 and U2Q4 make up the current sink path to Q5.

The front panel GAIN control (A13R3) determines the amount of current applied to the signal path (I4) versus the amount of current applied to the current sink path (I3). If the front panel GAIN control (A13R3) is set for minimum gain (ccw) then less current is applied to the signal path (I4) and more current is shunted to current sink Q5 (I3). At the maximum gain setting (cw) the opposite is true. This is accomplished by decreasing (front panel GAIN ccw) or increasing (front panel GAIN cw) current through R29 and R3. Q8 converts the differential signal current from U2Q2 and U2Q3 to a differential signal voltage which is applied to the bases of Q11 and Q12. Position control is accomplished by controlling current through Q6 and Q7.

The voltage applied to the bases of Q11 and Q12 determines the differential current flowing through Q11, Q12. Q13 supplies current for Q11 and Q12. Average adjustment (R64) sets current available for Q11 and Q12.

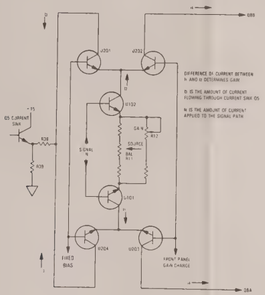

Figure 8-3. Simplified Schematic of X-Y Gain Control

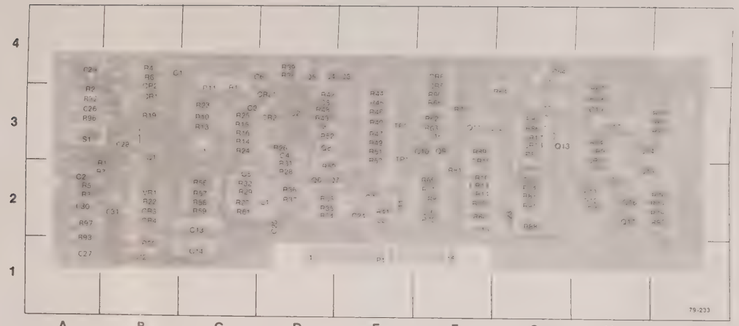

REF DESIG	GRID LOC	REF DESIG	GRID LOC	REF DESIG	GRID LOC	REF DESIG	GRID LOC	REF DESIG	GRID LOC	REF DESIG	GRID LOC	REF DESIG	GRID LOC	REF DESIG	GRID LOC
C1	B-4	R1	G-3	CR10	H-3	Q5	D-4	R10	C-3	R35	D-2	R54	G-4	R73	H-2	R92	A-3
C2	B-3	R2	G-2	CR11	H-2	Q6	D-2	R11	C-4	R36	D-2	R55	B-1	R74	H-3	R93	A-1
C3	B-3	R3	G-2	CR12	H-2	Q7	D-2	R12	C-4	R37	D-2	R56	C-2	R75	H-2	R96	A-3
C4	C-3	C24	E-2	CR13	F-2	Q8	D-3	R13	C-3	R38	D-4	R57	C-2	R76	I-2	R97	A-2
C5	B-3	C25	D-2	CR14	F-2	Q9	F-3	R14	C-3	R39	D-4	R58	C-2	R77	F-3	S1	A-3
C6	B-4	C26	A-3	CR15	F-3	Q10	F-3	R15	C-3	R40	E-3	R59	C-2	R78	I-2	TP1	E-3
C7	B-2	C27	A-1	CR16	F-2	Q11	F-3	R16	C-3	R41	E-2	R60	F-2	R79	I-2	TP2	E-3
C8	B-3	C28	B-3	CR17	G-3	Q12	G-3	R19	B-3	R42	D-3	R61	C-2	R80	I-2	U1	C-3
C9	B-3	C29	A-4	CR18	G-3	Q13	G-3	R22	B-2	R43	D-3	R62	F-3	R81	F-2	U2	D-3
C10	B-4	C30	A-2	CR19	H-3	Q14	H-3	R23	C-3	R44	E-3	R63	F-3	R82	G-3	VR1	B-2
C11	B-2	C31	B-2	CR20	D-3	Q15	H-2	R24	C-3	R45	E-3	R64	G-3	R83	G-2		
C12	B-4	CR1	B-3	CR21	D-3	Q16	H-2	R25	C-3	R46	E-3	R65	F-2	R84	G-2		
C13	B-2	CR2	B-4	CR22	D-3	Q17	H-2	R26	D-3	R47	E-3	R66	F-3	R85	F-2		
C14	B-1	CR3	B-2	CR23	D-3	R1	A-3	R27	C-2	R48	D-3	R67	H-4	R86	G-3		
C15	F-2	CR4	B-2	L1	D-2	R2	A-3	R28	D-2	R49	E-3	R68	I-3	R87	G-3		
C16	F-3	CR5	F-4	L2	E-2	R3	A-2	R29	C-2	R50	D-2	R69	I-3	R88	G-2		
C17	F-3	CR6	F-4	P1	E-1	R4	B-4	R31	D-3	R51	E-3	R70	I-3	R89	F-3		
C18	F-2	CR7	F-2	Q1	B-3	R5	A-2	R32	C-2	R52	D-3	R71	F-2	R90	F-3		
C19	H-2	CR8	F-3	Q3	E-4	R6	B-4	R33	D-2	R53	E-3	R72	F-2	R91	G-2		
C20	G-2	CR9	H-3	Q4	D-4	R7	A-2	R34	D-2								

Figure 8-4. X-Y Input Amplifier (A1, A3) Component Locator

Reference Designator	Vfsd = 2V Value	Vfsd = 2V HP Stock No.	Vfsd = 5V Value	Vfsd = 5V HP Stock No.	Vfsd = 10V Value	Vfsd = 10V HP Stock No.
A1 (A3) C28	15 pf	0160-2261	2.4 pf	0160-3592	N/A	N/A
A1 (A3) C29	4.5 pf—20 pf	0121-0446	4.5 pf—20 pf	0121-0446	4.5 pf—20 pf	0121-0446
A1 (A3) C30	15 pf	0160-2261	2.4 pf	0160-3592	N/A	N/A
A1 (A3) C31	4.5 pf—20 pf	0121-0446	4.5 pf—20 pf	0121-0446	4.5 pf—20 pf	0121-0446
A1 (A3) R2	7.5K	0757-0440	3.01K	0757-0273	3.11K	0757-0339
A1 (A3) R3	7.5K	0757-0440	3.01K	0757-0273	3.11K	0757-0339
A1 (A3) R96	7.5K	0757-0440	12.1K	0757-0841	27.4K	0757-0763
A1 (A3) R97	7.5K	0757-0440	12.1K	0757-0841	N/A	N/A

FULL SCALE DEFLECTION VOLTAGE (Vfsd)	VALUES OF C28 SINGLE ENDED	VALUES OF C28 DIF.	VALUE OF C30	VALUES OF C29 SINGLE ENDED	VALUES OF C29 DIF.	VALUE OF C31	VALUES OF R2 SINGLE ENDED	VALUES OF R2 DIF.	VALUES OF R3	VALUES OF R96 SINGLE ENDED	VALUES OF R96 DIF.	VALUES OF R97
1V STANDARD INSTRUMENT	N/A	N/A	N/A	N/A	N/A	N/A	47	10K	10K	JUMPER	JMPR	JUMPER
2V	N/A	15	15	N/A	4.5-20	4.5-20	47	7500	7500	JUMPER	7500	7500
5V	N/A	2.4	2.4	N/A	4.5-20	4.5-20	47	3010	3010	JUMPER	12.1K	12.1K
10V	N/A	N/A	N/A	N/A	4.5-20	4.5-20	47	3010	3010	JUMPER	27.4K	27.4K

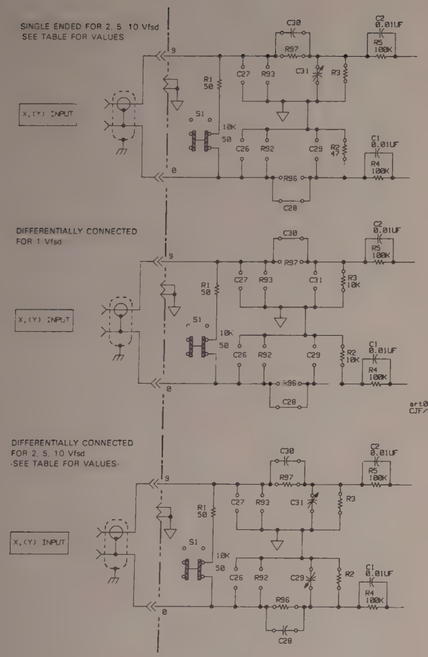

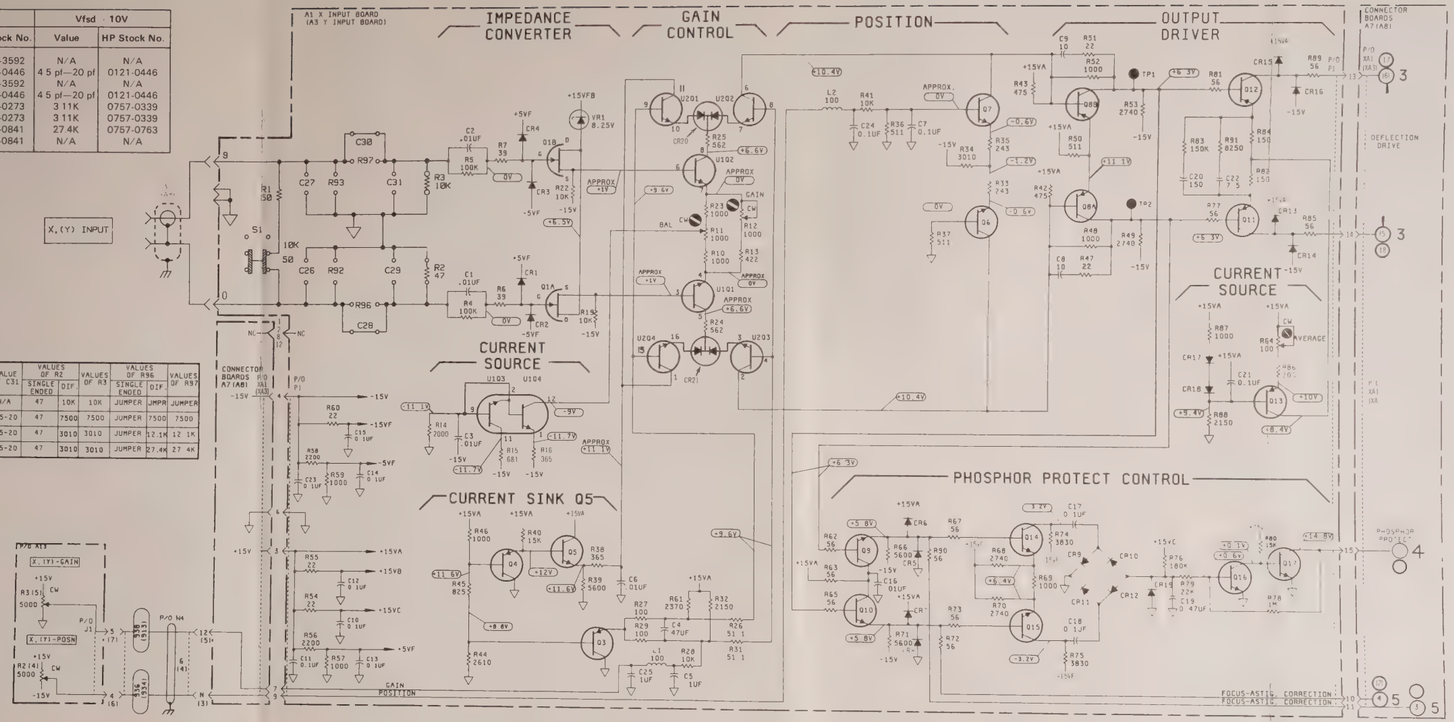

PARTS ON THIS SCHEMATIC

A1 OR A3	A13
C1 25 28 31 CR1 CR21 L1 L2 Q1 3 17 R1 7 10 16 19 22 29 R31 91 R96 97 S1 U1 U2	VR1 R2 41 R3 45

1311B/10-20/500

2

Figure 8-5.
Service Sheet 2, X-Y Axis Input Amplifier (A1, A3) Schematic

8-29. SERVICE SHEET 3 PRINCIPLES OF OPERATION.

NOTE: The output amplifier assembly (A2, A4) consists of two identical amplifiers each driving separate deflection plates. The following circuit description describes amplifier Q4 through Q9 and also applies to amplifier Q10 through Q15. (See figure 8-6, simplified output amplifier schematic).

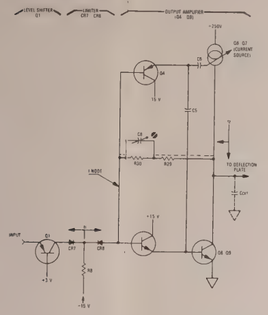

Figure 8-6. Simplified Output Amplifier Schematic

8-30. X-Y OUTPUT AMPLIFIER (Q4 through Q9, Q10 through Q15).

The output amplifier Q4 through Q9 operates as a current to voltage converter; that is, a small current change from the input results in a large voltage swing at the deflection plates. Q4 and Q5 are emitter followers. Q6 and Q7 make up the constant current source for the output amplifier (current I_2 remains constant except for very fast transitions). Transistors Q8 and Q9 perform the signal amplification. Q1 is a common base voltage level shifter. R8 supplies current to the output amplifier and the level shifter.

The current flowing through CR8 equals the current flowing through R29 and R30. When the input signal current changes, the portion of R8 current I_1 flowing through CR8 changes inversely. This action changes current flow through Q5, Q8 and Q9. The current supplied by Q6, Q7 (I_2) flows through Q8, Q9 or through feedback path R29 and R30. The current through the feedback path R29 and R30 is inversely proportional to current flow through Q8 and Q9. These varying currents through R29 and R30 equal the current changes through CR8. The I NODE side of R30 is always 1.2 V above ground, i.e., two diode drops (base emitter junctions of Q5 and Q8).

Where the current through the feedback path changes, the voltage drops across R29 and R30 change, resulting in large output voltage swings to the deflection plates. The purpose of Q4 is to speed up the fast low to high transitions by modifying the constant current source Q6, Q7. During these faster transition times more current is supplied to the circuit capacitance (CCKT). During the high to low transition the signal is coupled through C5, momentarily decreasing current I_2. This action allows Q8 and Q9 to discharge the circuit capacitance (CCKT) at a faster rate.

Table 8-2. Troubleshooting Guide for X-Y Output Amplifier

DEFLECTION PLATE VOLTAGE IS	AND THE I NODE VOLTAGE IS		
	LOW	≈1.2 V	HIGH
near 0 V	Check Q6,Q7 and associated resistors	Q1 R8 CR7, CR8	Q5, Q8
greater than 200 V	R29, R39 Q5,Q8 shorted	Q5,Q8,Q9 open Q1	

Due to the high voltage (250 V) and large voltage swings required by the deflection plates, the output devices actually consist of two stacked transistors sharing the voltages. Q8 and Q9 make up the output amplifiers, while transistors Q6 and Q7 supply the current. Pulse fidelity is compensated for by adjustment C5 (HF ADF No. 1).

8-31. TROUBLESHOOTING.

If trouble is suspected, visually inspect the instrument. Look for loose or burned componente that might suggest a source of trouble. Verify that all circuit board connections are making good contact. If no obvious trouble is found, check power supply voltages in the unit. Because there is a high degree of negative feedback in the output amplifier, the stage is relatively free of beta differences in the transistors. Use table 8-2 as a guide for major failures.

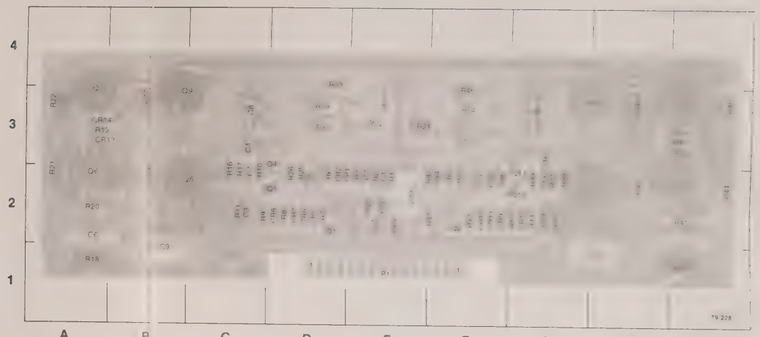

REF DESIG	GRID LOC	REF DESIG	GRID LOC	REF DESIG	GRID LOC	REF DESIG	GRID LOC	REF DESIG	GRID LOC	REF DESIG	GRID LOC	REF DESIG	GRID LOC	REF DESIG	GRID LOC
C1	E 2	C13	G 2	CR1	D 2	CR12	F 2	Q7	A-3	R3	E 2	R14	G 2	R25	D 2	[illegible]	[illegible]
C2	E 2	C14	F-2	CR2	D-2	CR13	A-3	Q8	B-2	R4	E 2	R15	G 2	R26	D 2	[illegible]	[illegible]
C3	C 2	C15	I-2	CR3	F-2	CR14	A 3	Q9	B-3	R5	F-2	R16	C 2	R27	B 3	[illegible]	[illegible]
C4	C 3	C16	G-3	CR4	F-2	CR15	I-3	Q10	G-2	R6	D-2	R17	C 2	R28	B-2	[illegible]	[illegible]
C5	D 2	C17	E-3	CR5	D-2	CR16	I-3	Q11	G-2	R7	D-2	R18	A 1	R29	D 3	[illegible]	[illegible]
C6	A 2	C18	E-2	CR6	D-2	P1	E-1	Q12	H-2	R8	D 2	R19	A-3	R30	D 3	[illegible]	[illegible]
C7	C 2	C19	H-1	CR7	D-2	Q1	D-2	Q13	H-3	R9	C-2	R20	A-2	R31	E-3	[illegible]	[illegible]
C8	C 3	C20	E-2	CR8	D-2	Q2	F-2	Q14	I-2	R10	C-2	R21	A-2	R32	F-3	[illegible]	[illegible]
C9	B 1	C21	E-2	CR9	F-2	Q4	D-3	Q15	I-3	R11	C-2	R22	A 3	R33	F-2	[illegible]	[illegible]
C10	G 2	C22	E-2	CR10	G-2	Q5	D-2	R1	E-2	R12	F-2	R23	D 4	R34	F-3	[illegible]	[illegible]
C12	G-3	C23	E-2	CR11	F-2	Q6	A-2	R2	E-2	R13	G-2	R24	E 3	R35	F-2	[illegible]	[illegible]

Figure 8-7. X-Y Output Amplifier (A2, A4) Component Locator

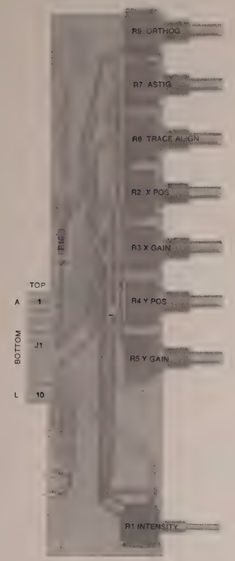

Figure 8-8. Control Board (A13) Component Locator

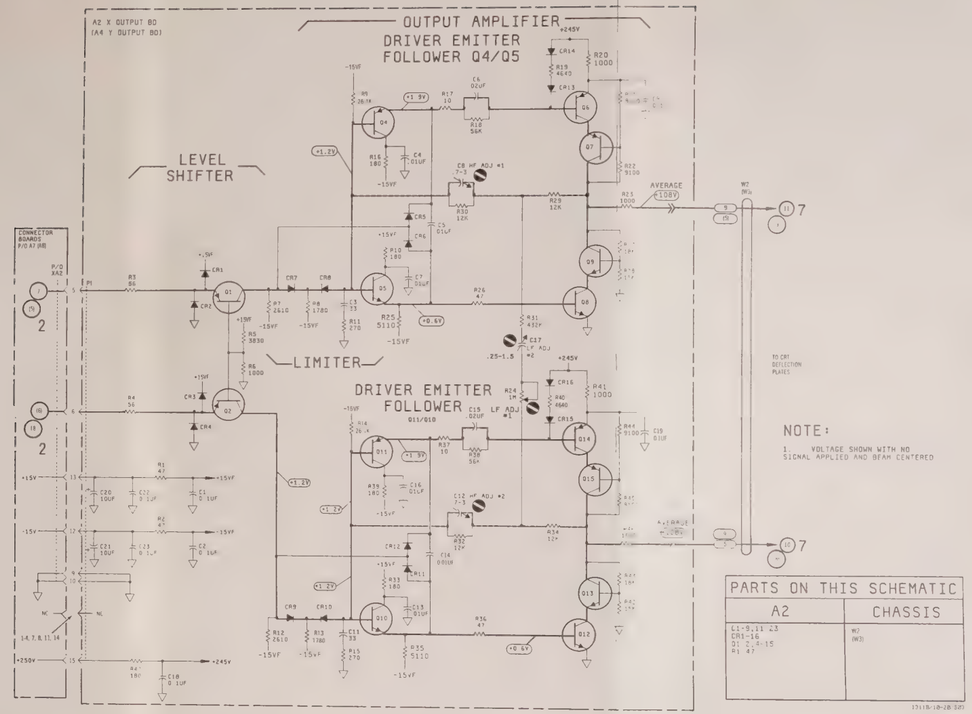

3

Figure 8-9
Service Sheet 3, X-Y Axis Output Amplifier (A2, A4) Schematic

8-32. SERVICE SHEET 4 PRINCIPLES OF OPERATION.

8-33. Impedance Converter, Gain Control and Binary Gray Shade.

Q5 is a high input impedance source follower that provides unity gain. The signal from the source follower Q5 is applied to gain control circuit U1. See figure 8-10 for the following discussion of the gain control circuit.

Q1 and Q2 comprise the current source for the Z-Axis gain control circuit U1. R19 balances the current paths I1 and I2. Collector circuits of Q3, Q7 and Q6, Q8 make up the differential signal path to U2Q1 and U2Q4. The front panel INTENSITY control sets the current differential between I3 and I4 are approximately equal. During the high gain condition (low input signal) current paths I3 and I4 equal current path I2.

The output of gain control circuit U1 is fed to fixed gain amplifier U2. When the Z-Axis is connected in the standard mode (jumpers E5 and E6), the offset through U2 is set by R2. The front panel INTENSITY controls the gain of U1 and the offset is constant through U2. In the option 003 mode, U1 is a fixed gain stage and the INTENSITY controls the offset through U2. (see simplified flow chart of the Z-Axis Amplifier below).

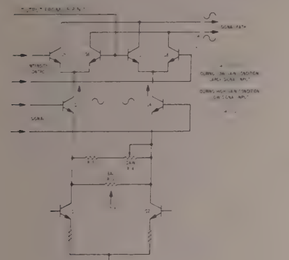

Figure 8-10. Simplified Schematic of Z-axis Gain Control

U3 is a current source for both the focus amplifier and the Z-Axis output. The current differential between U3Q3 and U3Q4 determines the current split between The Focus Amplifier and Z-Axis output. U3Q1 and U3Q2 act as a switch. If the TTL Blanking is not used, U3Q2 is turned on and U3Q1 is off. When TTL Blanking is used, U3Q1 turns and U3Q2 turns off.

BINARY INTENSITY LEVEL

A5U4 is a dual two to four line decoder. Depending on the binary input code (input to J5), a combination of two resistors from network A5R71 through A5R77 are placed in parallel with A5R78. This resistor combination determines current flow through A5U5Q4. The current through A5U5Q4 sets the output voltage of differential amplifier A5U5Q1 Q2.

EXAMPLE. A binary code of 000 at J5 switches the resistor combination of A5R73 R77 in parallel with A5R78 and determines current flow through A5U5Q4.

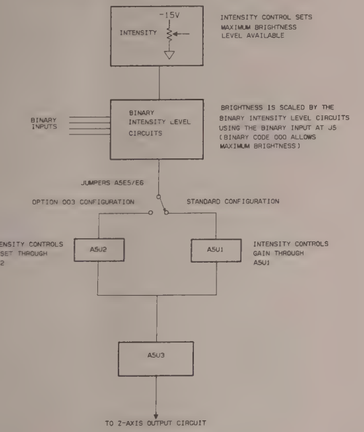

The output voltage of A5U5 is compared to the voltage set by Gain Balance adjustment A5R16. The difference between these two voltages sets the current differential between A5U1 pin 6 and A5U91 Pin 12.

8-34. Z-Axis Output Amplifier.

Transistors Q2 and Q3 function as emitter followers, while Q4 and Q5 are a complementary pair. A feedback circuit is provided through C6 and R56. C6 provides adjustment for the fast corners of the output pulse. Slower compensation is provided by network C5 and R53. CR7 and CR8 are high current diodes that provide protection for the output amplifier against arcs and transients. The output of the Z-Axis amplifier is applied to the grid level translator on the High-Voltage power supply assembly (A9) where it establishes the potential difference between CRT grid and cathode (see service sheet 7).

8-35. Phosphor Protection.

The purpose of the phosphor protection circuit is to prevent CRT phosphor or expansion mesh damage caused by a high intensity, slow moving or static beam. Refer to figure 8-11 and schematics 2 and 4 for the following discussion of circuit details.

The phosphor protection control voltage is picked off at the collectors of A1Q8A/Q8B and is applied to emitter followers A1Q9 and A1Q10. The signal is amplified by A1Q14 and A1Q15 and rectified by bridge rectifier A1CR9-CR12. A1C19 provides filtering for the rectifier signal. The output of the bridge rectifier is a negative voltage that is proportional to the X(Y) axis input voltage. Low frequency or low amplitude input signals will not provide sufficient negative voltage at A1C19 to turn off A1Q16. A1Q17, A5Q6 and A5Q7 will remain off for as long as A1Q16 remains turned on. A5C14 charges to approximately +2.5 V through A5Q8, turning A5Q9 and A5Q10 on. As long as A5Q10 is conducting, the Z-Axis output level is clamped to approximately +18 V, therefore limiting CRT beam current.

Automatic beam current limiting may not be desirable in some system applications. In such cases the phosphor protection circuit may be disabled by the Phosphor Protection switch A8S1.

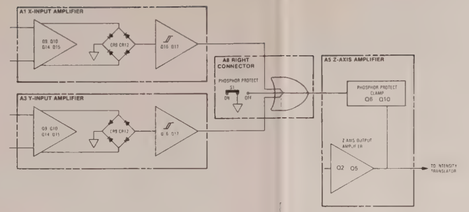

Figure 8-11. Simplified Block Diagram of the Phosphor Protection Circuit

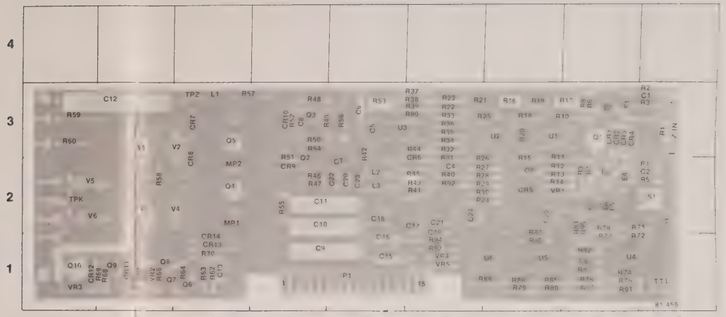

REF DESIG	GRID LOC	REF DESIG	GRID LOC	REF DESIG	GRID LOC	REF DESIG	GRID LOC	REF DESIG	GRID LOC	REF DESIG	GRID LOC	REF DESIG	GRID LOC	REF DESIG	GRID LOC	REF DESIG	GRID LOC	REF DESIG	GRID LOC
C1	J-3	C21	F-2	E2	H-3	Q7	B-1	R17	H-3	R37	F-3	R57	C-3	R76	H-1	S1	J-2
C2	J-2	C22	E-2	E3	H-2	Q8	B-1	R18	G-3	R38	F-3	R58	B-2	R77	H-1	TP1	A-2
C3	G-2	C23	E-2	E4	H-2	Q9	B-1	R19	G-3	R39	F-3	R59	A-3	R78	G-2	TP2	C-3
C4	F-2	C24	F-2	E5	H-2	Q10	A-1	R20	G-3	R40	F-2	R60	A-3	R79	G-1	U1	C-3
C5	E-3	C25	G-2	E6	H-2	R1	J-3	R21	F-3	R41	F-2			R80	G-1	U3	E-1
C6	E-3	CR1	H-3	E7	H-2	R2	J-3	R22	F-3	R42	E-3	R62	C-1	R81	G-1	U4	H-2
C7	E-2	CR2	H-3	E8	H-2	R3	J-3	R23	F-3	R43	F-2	R63	C-1	R82	H-1	U5	G-1
C8	D-3	CR3	H-3	J1	J-2	R4	J-2	R24	F-2	R44	F-3	R64	C-1	R83	H-1	U6	G-1
C9	D-1	CR4	H-3	L1	C-3	R5	J-2	R25	F-3	R45	F-2	R65	B-1	R84	H-2	V1	B-3
C10	D-2	CR5	G-2	L2	E-2	R6	H-3	R26	F-2	R46	D-2	R66	B-1	R85	G-1	V2	B-3
C11	D-2	CR6	F-2	L3	E-2	R7	H-3	R27	F-2	R47	D-2	R67	B-1	R86	G-1	V3	B-2
C12	B-2	CR7	C-3	MP1	C-2	R8	H-3	R28	F-2	R48	D-3	R68	B-1	R87	G-1	V4	B-2
C13	C-1	CR8	C-2	MP2	C-2	R9	H-2	R29	F-2	R49	D-3	R69	A-1	R88	G-1	V5	A-2
C14	B-1	CR9	D-2	P1	E-1	R10	H-3	R30	F-2	R50	D-3	R70	C-1	R89	G-1	V6	A-2
	E-1	CR10	D-3	Q1	H-3	R11	G-2	R31	F-2	R51	D-2	R71	J-2	R90	F-3	VR1	G-2
	E-1	CR11	B-1	Q2	D-2	R12	G-2	R32	F-3	R52	D-3	R72	J-1	R91	H-1	VR2	B-1
	F-2	CR12	A-1	Q3	D-3	R13	G-2	R33	F-3	R53	E-3	R73	H-1	R92	F-2	VR3	A-1
	E-2	CR13	C-1	Q4	C-2	R14	G-2	R34	F-3	R54	D-3	R74	H-1	R93	F-1	VR4	F-1
	F-1	CR14	C-1	Q5	C-3	R15	G-2	R35	F-3	R55	D-2	R75	H-1	R94	F-1	VR5	F-1
	E-2	E1	H-3	Q6	C-1	R16	G-3	R36	F-3	R56	E-3			R95	H-2		

Figure 8-12. Z-axis Amplifier (A5) Component Locator

DC VOLTAGE MEASUREMENT CONDITIONS SERVICE SHEET 4

1. A5 Z-Axis amplifier in standard configuration as shown in figure 3-6.

2. No signal applied to Z INPUT. TTL input has shorting cap installed. PHOSPHOR PROTECT switch "A8S1" OFF.

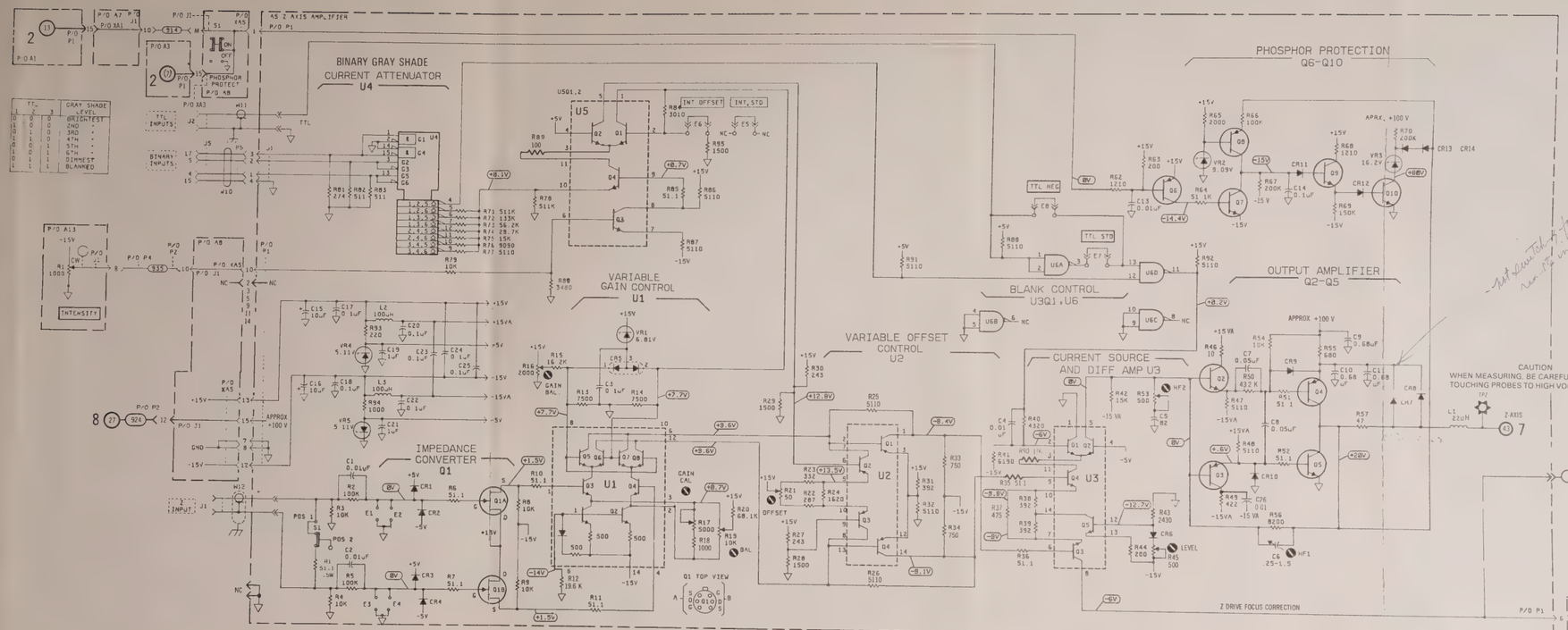

4

Figure 8-13.
Service Sheet 4, Z-Axis Amplifier (A5) Schematic

8-36. SERVICE SHEET 5 PRINCIPLES OF OPERATION.

8-37. DYNAMIC FOCUS.

The purpose of focus correction is to provide optimum focus of the displayed signal over the entire screen. The focus voltage required for optimum spot size varies as the square of the distance from center screen. The focus correction circuit approximates this variation using a differential amplifier with two diode controlled gain break points.

8-38. X-Y INPUT AMPLIFIERS (A6Q1 through A6Q4).

The required square law response is achieved in the following manner: with gain adjustments FY1 and FY2 (R10 and R11) set to center and with a 0 V differential input to Q1 and Q2 (beam at center screen) the differential voltage at collectors of Q1 and Q2 is also at 0 V. Under these conditions the parallel combination of R6, R8 and R12 provides the collector load resistance for Q1. The load resistance for Q2 is made up of parallel combination R7, R9 and R13. As the beam is moved vertically so that the base of Q1 becomes more negative, the collector voltage will move in a positive direction. When the collector of Q2 becomes more positive than the wiper of FY2 (R11), CR5 stops conducting, leaving the parallel combination R6 and R8 as the collector load for Q1. As beam movement continues in the same direction CR1 stops conducting leaving R6 as the collector load resistor. The collector load change increases gain from approximately 1 to 6 and 12 respectively. Note that beam movement in this direction does not cause any gain changes of Q2 (CR2 and CR6 remain forward biased). Vertical movement of the beam in the opposite direction causes the gain of Q2 to change from approximately 1 to 6 and to 12 in the same manner as Q1.

8-39. CURRENT AMPLIFIERS (Q5, Q6, Q7, Q8).

The purpose of CR9 and CR10 is to connect the more positive of the collectors voltages (collector of Q1 or collector of Q2) to the base of Q5. As a result, current through Q6 increases symmetrically as the beam is moved vertically. Q6 is the voltage source for Q5.

The X-axis correction current is derived from Q3, Q4, Q7 and Q8 in the same manner as the Y-axis correction current. The X-Y axis correction currents are summed at the collectors of Q5 and Q7.

8-40. FOCUS OUTPUT (A6Q22 through A6Q25).

Transistors Q22 and Q23 function as emitter followers, while Q24 and Q25 are a complementary pair. A feedback circuit is provided through C4 and R102 with C4 providing fast corner adjustment to maintain output pulse fidelity. Slower frequency compensation is accomplished by network C2 and R47. CR13 through CR16 are high current diodes and offer protection for the output amplifiers against arcs and transients. The output of the focus amplifier is applied to focus level translator on the high voltage power supply assembly (A9) where it establishes the operating potential for the CRT focus grid.

8-41. Z-AXIS FOCUS CORRECTION (A6Q9, Q10, Q11).

The purpose of the Z-axis focus correction is to provide a more negative focus voltage as beam current is increased (Z-axis output more positive). This is accomplished by differential amplifier Q9 and Q10. The bias of Q9 is set by focus balance R44, while bias for Q10 is established by focus gain (R43).

As Z-axis output voltage increases, the current through Q11 decreases (see Z-axis schematic on service sheet 4) resulting in less current flow through Q10. Because Q9 and Q10 are connected in a differential amplifier configuration, more current will flow through Q9 and cause a decrease in focus output voltage.

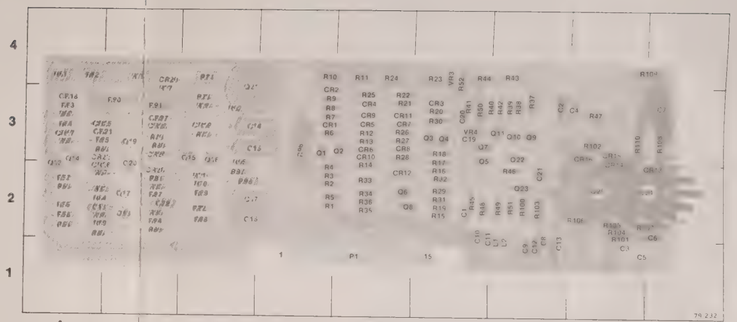

REF DES/G	GRID LOC	REF DES/G	GRID LOC	REF DES/G	GRID LOC	REF DES/G	GRID LOC	REF DES/G	GRID LOC	REF DES/G	GRID LOC	REF DES/G	GRID LOC
C1	F-2	C22	B-2	CR21	B-3	Q11	G-3	R8	E-3	R29	F-2	R50	F-3	R72	C-2	R92	C-3
C2	G-3	CR1	E-3	CR22	B-3	Q13	A-2	R9	E-3	R30	F-3	R51	G-2	R73	C-3	R93	B-2
C3	H-1	CR2	E-3	CR23	B-3	Q14	A-3	R10	D-4	R31	F-2	R52	F-4	R74	C-4	R94	B-2
C4	H-3	CR3	F-3	CR24	B-3	Q15	C-3	R11	E-4	R32	F-2	R54	A-2	R75	B-4	R95	C-3
C5	I-2	CR4	E-3	CR25	B-3	Q16	C-3	R12	E-3	R33	E-2	R55	A-2	R76	C-3	R96	D-3
C6	I-2	CR5	E-3	CR26	B-2	Q17	B-2	R13	E-3	R34	E-2	R56	A-2	R77	B-3	R97	C-2
C7	I-3	CR6	E-3	CR27	B-3	Q18	B-2	R14	E-3	R35	E-2	R57	A-2	R78	C-3	R98	C-2
C8	G-1	CR7	E-3	CR28	B-2	Q19	B-3	R15	F-2	R36	E-2	R58	A-2	R79	B-3	R100	G-2
C9	G-1	CR8	E-3	L1	G-1	Q20	B-3	R16	F-2	R37	G-3	R59	A-3	R80	B-3	R101	H-2
C10	F-2	CR9	E-3	L2	G-1	Q21	C-4	R17	F-3	R38	G-3	R60	A-3	R81	B-2	R102	H-3
C11	G-2	CR10	E-3	P1	E-1	Q22	G-3	R18	F-3	R39	G-3	R61	A-4	R82	B-2	R103	G-2
C12	G-1	CR11	E-3	Q1	D-3	Q23	G-2	R19	F-2	R40	G-3	R62	A-4	R83	B-2	R104	H-2
C13	G-1	CR12	E-2	Q2	E-3	Q24	I-2	R20	F-3	R41	F-3	R63	A-3	R84	B-2	R105	H-2
C14	C-3	CR13	I-3	Q3	F-3	Q25	H-2	R21	E-3	R42	G-3	R64	A-3	R85	B-2	R106	H-2
C15	C-3	CR14	H-3	Q4	F-3	R1	E-2	R22	E-3	R43	G-4	R65	B-3	R86	B-2	R107	I-2
C16	C-2	CR15	H-3	Q5	F-3	R2	E-2	R23	F-4	R44	F-4	R66	B-3	R87	B-2	R108	I-3
C17	C-2	CR16	H-3	Q6	E-2	R3	E-2	R24	E-4	R45	F-2	R67	B-2	R88	B-2	R109	I-4
C18	B-2	CR17	A-3	Q7	F-3	R4	E-2	R25	E-2	R46	G-2	R68	C-2	R89	B-2	R110	I-3
C19	F-3	CR18	A-3	Q8	E-2	R5	E-2	R26	E-3	R47	H-3	R69	C-2	R90	B-3	VR3	F-4
C20	F-3	CR19	C-3	Q9	G-3	R6	D-3	R27	E-3	R48	F-2	R70	C-2	R91	B-3	VR4	F-3
C21	G-2	CR20	B-4	Q10	G-3	R7	E-3	R28	E-3	R49	G-2	R71	C-2				

Figure 8-14. Part of Focus and Astigmatism Amplifier (A6) Component Locator

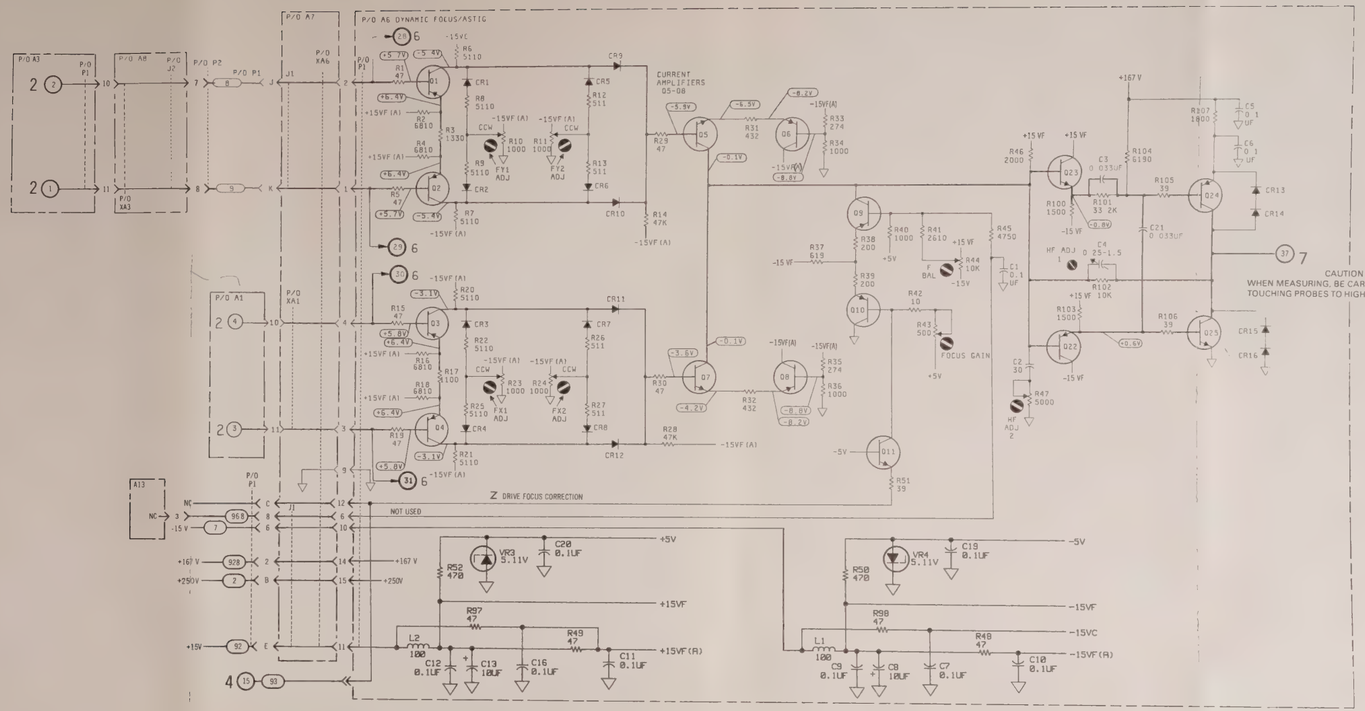

PARTS ON THIS SCHEMATIC		
A6	A7	CHASSIS
C1-6,8-13,16,17,19-21 CR1-16 Q1-11,22-25 R1-52,97,98,100-107, 110 VR3,4 L1,2	J1 P/O W9	P/O W9

1311B/10-20/582

5

Figure 8-15.
Service Sheet 5, Dynamic Focus (A6) Schematic

8-42. SERVICE SHEET 6 PRINCIPLES OF OPERATION.

8-43. DYNAMIC ASTIGMATISM.

The purpose of the dynamic astigmatism circuit is to aid in obtaining an optimum focused display over the entire screen. With the exception of the output amplifiers, the dynamic astigmatism circuit operation is identical to the dynamic focus circuit.

8-44. X-Y INPUT AMPLIFIERS (A6Q13 through A6Q16).

With gain adjustments AY1 and AY2 (R61 and R62) set to midrange and with a 0 V differential input applied to Q13 and Q14 (beam at center screen) the differential voltage at the collectors of Q13 and Q14 is also 0 V. Under these conditions the parallel combination of R59, R60 and R65 provides the collector load resistance for Q13. The collector load resistance for Q14 is made up of the parallel combination R64, R63, R66. As the beam is moved vertically so that the base of Q13 becomes more negative, the collector voltage will move in a positive direction. When the collector of Q13 becomes more positive than the wiper of AY2 (R62), CR21 stops conducting leaving the parallel combination of R59 and R60 as the collector load for Q13. As beam movement continues in the same direction, CR17 stops conducting leaving R59 as the collector load resistor. This collector load change increases gain from approximately 1 to 6 and to 12 respectively. Note that beam movement in this direction does not cause any gain changes of Q14 (CR18 and CR22 remain forward biased).

Vertical movement of the beam in the opposite direction causes the gain of Q14 to change from approximately 1 to 6 and to 12 in the same manner as Q13.

8-45. CURRENT AMPLIFIERS (A6Q17 through A6Q20).

The purpose of CR25 and CR26 is to connect the more positive of the collector voltages (collector of Q13 or collector of Q14) to the base of Q17. As a result, current through Q17 increases symmetrically as the beam is moved vertically. Q18 is the voltage source for Q17.

The X-axis correction current is derived from Q15, Q16, Q19 and Q20 in the same manner as the Y-axis correction current except in the opposite polarity. The Y and X-axis correction currents are summed at the collector of Q17 and Q19.

8-46. ASTIGMATISM OUTPUT AMPLIFIER (A6Q21).

Common base amplifier Q21, astigmatism balance R90, and collector load resistor R96 make up the astigmatism output ampifier. The astigmatism correction currents are converted to a signal voltage which is applied to a grid in the CRT electron gun. Astigmatism balance R90 sets thd dc bias current for Q21.

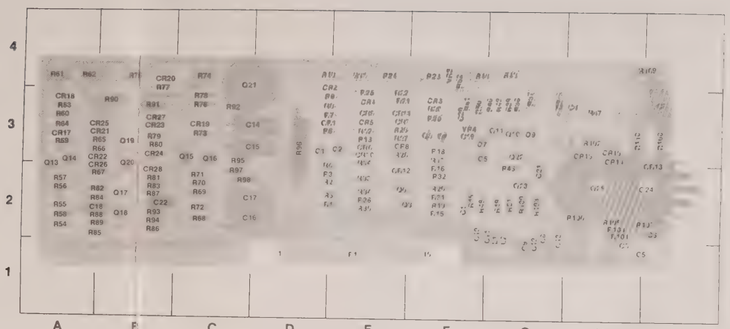

REF DESIG	GRID LOC	REF DESIG	GRID LOC	REF DESIG	GRID LOC	REF DESIG	GRID LOC	REF DESIG	GRID LOC	REF DESIG	GRID LOC	REF DESIG	GRID LOC	REF DESIG	GRID LOC
C1	F-2	C22	B-2	CR21	B-3	Q13	G-3	R8	E-3	R29	F-2	R50	F-3	R72	C-2	R92	C-3
C2	G-3	C23	E-3	CR22	B-3	Q14	A-2	R9	E-3	R30	F-3	R51	G-2	R73	C-3	R93	B-2
C3	H-1	C24	E-3	CR23	B-3	Q15	A-3	R10	D-4	R31	F-2	R52	F-4	R74	C-4	R94	B-2
C4	H-3	C25	F-3	CR24	B-3	Q16	C-3	R11	E-4	R32	F-2	R54	A-2	R75	B-4	R95	C-3
C5	I-2	C26	E-3	CR25	B-3	Q17	F-3	R12	E-3	R33	F-2	R55	A-2	R76	C-3	R96	D-3
C6	I-2	C27	E-3	CR26	B-2	Q18	B-2	R13	E-3	R34	F-2	R56	A-2	R77	B-3	R97	C-2
C7	I-3	C28	E-3	CR27	B-3	Q19	B-2	R14	E-3	R35	F-2	R57	A-2	R78	C-3	R98	C-2
C8	G-1	CR7	E-3	CR28	B-2	Q20	B-3	R15	F-2	R36	E-2	R58	A-2	R79	C-3	R99	C-2
C9	G-1	CR8	E-3	L1	G-1	Q21	B-3	R16	F-2	R37	G-3	R59	A-3	R80	B-3	R100	G-2
C10	F-2	CR9	E-3	L2	G-1	Q22	B-4	R17	F-3	R38	G-3	R60	A-3	R81	B-3	R101	H-2
C11	G-2	CR10	E-3	R1	E-1	Q23	G-3	R18	F-3	R39	G-3	R61	A-4	R82	B-2	R102	H-3
C12	G-1	CR11	E-3	Q1	D-3	Q24	G-2	R19	F-2	R40	G-3	R62	A-4	R83	B-2	R103	G-2
C13	G-1	CR12	E-2	Q2	E-3	Q25	H-2	R20	F-3	R41	F-3	R63	A-3	R84	B-2	R104	H-2
C14	C-3	CR13	I-3	Q3	F-3	Q26	H-2	R21	E-3	R42	G-3	R64	A-3	R85	B-2	R105	H-2
C15	C-3	CR14	H-3	Q4	F-3	R1	E-2	R22	E-3	R43	G-4	R65	B-3	R86	B-2	R106	H-2
C16	C-2	CR15	H-3	Q5	F-3	R2	E-2	R23	F-4	R44	F-4	R66	B-3	R87	B-2	R107	I-2
C17	C-2	CR16	H-3	Q6	E-2	R3	E-2	R24	E-4	R45	F-2	R67	B-2	R88	B-2	R108	I-3
C18	B-2	CR17	A-3	Q7	F-3	R4	E-2	R25	E-2	R46	G-2	R68	C-2	R89	B-2	R109	I-4
C19	F-3	CR18	A-3	Q8	E-2	R5	E-2	R26	E-3	R47	H-3	R69	C-2	R90	B-3	R110	I-3
C20	F-3	CR19	C-3	Q9	G-3	R6	D-3	R27	E-3	R48	F-2	R70	C-2	R91	B-3	VR3	F-4
C21	G-2	CR20	B-4	Q10	G-3	R7	E-3	R28	E-3	R49	G-2	R71	C-2			VR4	F-3

Figure 8-16. Part of Focus and Astigmatism Amplifier (A6) Component Locator

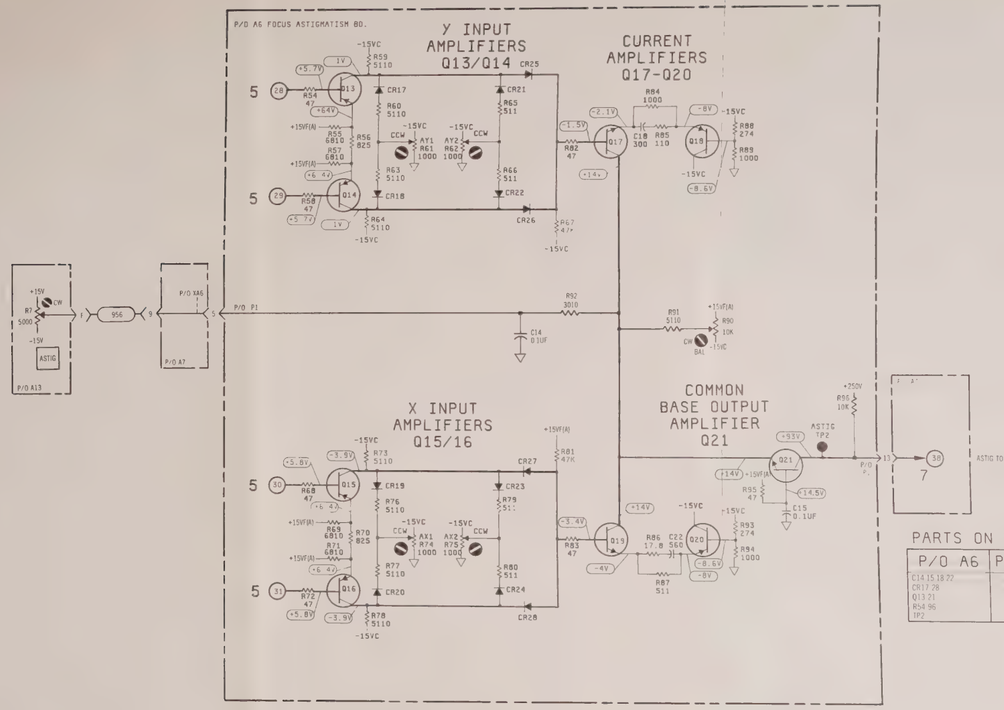

6

Figure 8-17.
Service Sheet 6, Dynamic Astigmatism (A6) Schematic

8-47. SERVICE SHEET 7 PRINCIPLES OF OPERATION.

8-48. OSCILLATOR POWER SUPPLY (A9CR16, A9VR1, Q4).

The oscillator power supply provides the high voltage oscillator Q5, with a voltage source stabilized from line voltage fluctuations. The full wave bridge, CR16, rectifies the ac secondary from power transformer T1. VR1 sets the base voltage for Q4, a darlington transistor acting as an emitter follower for its base voltage. The emitter voltage is approximately +21 V, two diode drops from the base voltage.

8-49. HIGH VOLTAGE OSCILLATOR (A9Q5, Primary of A9T1).

The high voltage oscillator operates as a class C oscillator conduction less than 50% of the oscillator period. The voltage across the collector winding (pins 3 and 4 of T1) is coupled through the transformer T1 to the feedback winding (pins 1 and 2 of T1) to provide base drive for the oscillator. CR4, CR4, CR5 and R12 provide reverse bias protection for Q5. The series resonant circuit C9, L2 provide a low impedance termination for the feedback winding at the oscillator frequency (approximately 20 kHz).

8-50. CATHODE SUPPLY (A9CR7, Secondary of A9T1).

The cathode voltage is derived from the high ac voltage present at pin 8 of T1 with respect to pin 5 of T1. CR7 is the rectifier and C14, C14 and R3 provide the filtering for the cathode supply.

8-51. HIGH VOLTAGE REGULATOR (A9U1)

For the following discussion refer to figure 8-18.

High voltage regulator comparator amplifier, U1, controls the bias of oscillator Q5. Pin 2 of U1 is at dc ground, 0 V, and is used as the amplifier's reference. The other input, pin 3, is at the nominal 0 V node of a voltage divider consisting of R3, R4 and R24. The −250 V supply, at R3, is the reference for the high voltage supply. The cathode voltage is determined by the following formula.

$$VK = \frac{-250}{R3+R4}(R24) = -4521\ V \pm 2\%(4530\text{-}4610)$$

when $R3+R4 = 1.659\ M\Omega$

$R24 = 30\ M\Omega$

When the regulator circuit is stable, the CRT cathode voltage will offset the −250 V reference and provide a nominal 0 V at U1 pin 3. Increased beam intensity (cathode current) will cause the cathode voltage to try to drop go positive. This will cause the voltage at U1 pin 3 to go positive. The output current of U1 will increase and increase the conduction of Q5 until the cathode voltage returns to its nominal value and the input at U1 pin 3 returns to 0 V. This action will reverse in the event of a decreased current demand and the cathode voltage increases (goes negative).

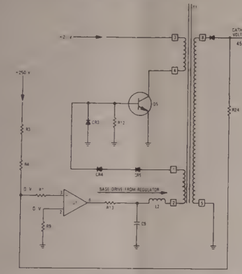

Figure 8-18. Simplified Schematic of High Voltage Regulator Circuit

8-52. HIGH VOLTAGE SHUTDOWN (A9U2, A9Q3, A9U1).

8-53. PURPOSE.

The purpose of the high voltage shutdown circuit is to prevent excessive accelerating potential from being applied to the CRT. If the cathode voltage exceeds −4750 V, it may be possible for the CRT in this instrument to emit x-rays exceeding the internationally recognized maximum allowable level (0.5 mR/hr at 5 cm from the surface of the instrument).

8-54. CAUSES OF X-RAY EMISSIONS.

X-ray radiation results from high velocity electrons striking a target, in this case the inside surface of the CRT. The magnitude of radiation depends on the electron density (beam current) and the total accelerating voltage (cathode + post accelerator voltage).

8-55. PREVENTING X-RAY EMISSIONS.

1. Control of electron density (beam current) is accomplished by proper alignment of the intensity limit circuit, which limits front panel INTENSITY adjustment. (See Section V, paragraph 5-14 for intensity limit adjustment.)

2. Since the post accelerator voltage is determined by the cathode voltage, total accelerating potential can be controlled by limiting the cathode voltage to the acceptable limits. The high voltage shutdown circuit limits cathode voltage to −4750 V. (See Section V, paragraph 5-12 for high voltage shutdown calibration.)

When all affected circuits have been properly calibrated, x-ray emissions from this instrument will not exceed 0.2 mR/hr.

8-56. PRINCIPLES OF OPERATION.

Refer to figure 8-19 for the following discussion.

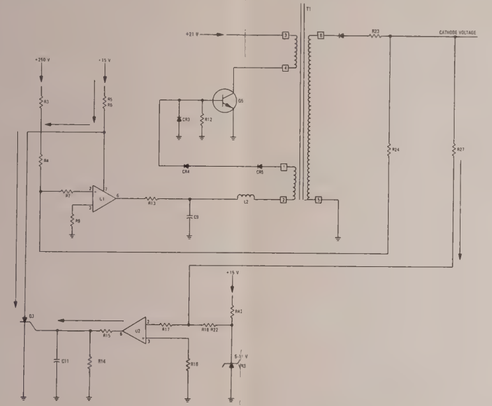

Figure 8-19. Simplified Schematic of High Voltage Shutdown Circuit

The difference between cathode voltage and the +5.11 V reference (VR3) induces current flow through R27 and network R18 through R22. Cathode voltages between −4400 V and −4600 V (normal operating potential) produce a positive voltage at pin 2 U2.

The output of U2 (pin 6) is negative and Q3 is reversed biased. Cathode voltages between −4650 V and −4750 V produce a negative voltage at U2 pin 2. The output of U2 pin 6 changes to a positive voltage, triggering Q3. When Q3 is conducting, U1 pin 7 is grounded, which reverse biases the high voltage oscillator Q5, preventing oscillations. The cathode voltage drops to 0 V and remains at 0 V until the instrument is turned off and the problem is corrected.

8-57. TROUBLESHOOTING.

If trouble is suspected, visually inspect the instrument. Look for loose or burned components that might suggest a source of trouble. Verify that all circuit board connections are making good contact. If no obvious trouble is found, check table 8-3 for symptoms and probable causes.

Table 8-3. Troubleshooting Hints for High Voltage Shutdown Circuit

Symptom	Probable Cause
NO CATHODE VOLTAGE (A9TP1 is Positive)	1. Excess cathode voltage generated, high voltage oscillator Q5 is reversed bias. a. +250 V power supply is too high or out of regulation b. A9R3/R4 changed value c. A9U1 shorted, or improperly installed d. A9CR4/CR5 are shorted 2. High voltage shutdown occurred at less than −4650 V a. reference voltage (A9VR3) too low b. changed value of A9R18 through A922 c. changed value of A9R27 d. U2 shorted to +15 V supply e. A9CR12 shorted f. open circuit between U2 pin 2 and junction of A9R42 and A9VR3.
High voltage shutdown does not occur between −4650 V and −4750 V (A9TP1) is negative	1. A9R27 is open or changed value to more than 30 MΩ 2. A9VR3 is open or high 3. One of the resistors from A9R18 through A9R22 changed value (lower than specified) 4. A9C12 shorted to ground 5. A9U2 shorted to ground or to −15 V supply 6. A9CR6 shorted to ground 7. A9C11 shorted to ground

8-58. CRT CIRCUITS.

8-59. GRID LEVEL TRANSLATOR (A9CR9, A9CR10, A9CR11, A9CR12).

The grid supply provides CRT grid bias with provision to compensate for CRT cutoff between different CRT's. The large sinewave at A9T1 pin 6 is coupled through A9R25 and A9C16 (isolation network) to junction of A9CR11 and A9CR12. A9CR11 clips the negative going portion of the waveform at a voltage equal to the output of the Z-axis amplifier. A9CR12 clips the positive going portion of the waveform at a voltage determined by the setting of the intensity limit adjust (A9R38). The peak to peak amplitude at the junction of A9CR11 and A9CR12 is therefore equal to the difference between the intensity limit voltage and the output of the Z-axis amplifier. This signal is coupled through A9C19 to the junction of A9CR9 and A9CR10 which is clamped to the cathode voltage of A9CR9. A9CR10 charges A9C20 to the cathode voltage minus the peak to peak amplitude of the signal at the junction of A9CR11 and A9CR12. This voltage is then applied to the CRT grid. Fast transitions from the Z-axis output are directly coupled to the CRT grid via A5C28, while slower transitions are coupled through the grid level translator.

8-60. FOCUS LEVEL TRANSLATOR (A9CR8, A9CR13, A9CR14, A9CR15).

The focus level translator provides the operating potential for the CRT focus grid. The large sinewave at A9T1 pin 6 is coupled through A9C17 and A9R26 (isolation network) to junction of A9CR8 and A9CR15. A9CR15 clips the negative going portion of the waveform at a voltage equal to the output of the focus amplifier. A9CR8 clips the positive going portion of the waveform at a voltage determined by A9VR4 and A9VR5 (136 V). The peak to peak amplitude at the junction of A9CR8 and A9CR15 is therefore equal to the difference between the voltage established by A9VR4, A9VR5 and the output voltage of the focus amplifier. This signal is coupled through A9C23 to the junction of A9CR13 and A9CR14. A9CR13 then clamps the output voltage to a level established by the focus limit adjust (A9R30) and the front panel FOCUS control. A9CR14 charges A9C24 to the reference voltage established by the focus limit adjustment and the focus control minus the peak to peak amplitude at the junction of A9CR8 and A9CR15. This voltage is then applied to the CRT focus grid.

8-61. FILAMENT AND PA SUPPLY (P/O T1, A10).

The filament supply is provided by a separate secondary winding of T1. The supply voltage should range from 5.6 V to 5.8 V. The voltage should only be measured with an isolated R.M.S. meter rated at 5 kV or better.

The multiplier assembly (A10) supplies the post accelerator voltage for the CRT. Part of the secondary of T1 is applied to high voltage multiplier assembly A10 where the voltage is multiplied approximately eight times, rectified, filtered, and then applied to the post acclerator of the CRT.

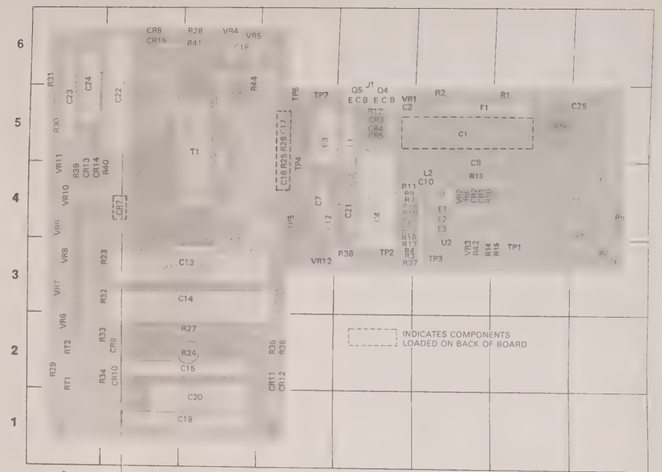

REF DESIG	GRID LOC	REF DESIG	GRID LOC	REF DESIG	GRID LOC	REF DESIG	GRID LOC	REF DESIG	GRID LOC	REF DESIG	GRID LOC	REF DESIG	GRID LOC	REF DESIG	GRID LOC
C1	F-5	C15	C-2	CR2	F-4	CR17	G-4	R2	F-5	R16	E-3	R30	A-5	R43	G-4	U2	F-3
C2	D-5	C16	D-4	CR3	E-5	CR18	G-3	R3	E-3	R17	E-3	R31	A-5	R44	C-6	VR1	E-5
C3	D-5	C17	D-5	CR4	E-5	CR16	G-5	R4	E-3	R18	E-4	R32	A-3	RT1	A-1	VR2	F-4
C4	E-4	C18	C-5	CR5	E-5	E1	F-4	R5	H-4	R19	E-4	R33	A-2	RT2	A-2	VR3	F-3
C5	G-4	C19	C-1	CR6	G-3	E2	F-4	R6	H-3	R20	E-4	R34	A-1	T1	C-5	VR4	C-6
C6	H-3	C20	C-1	CR7	B-4	E3	F-4	R7	E-4	R21	E-4	R35	D-2	TP1	G-3	VR5	C-6
C7	D-4	C21	F-4	CR8	B-4	F1	F-5	R8	J-1	R22	F-4	R36	D-2	TP2	E-3	VR6	A-2
C8	G-4	C22	B-5	CR9	B-2	J1	E-5	R9	E-4	R23	A-3	R37	E-3	TP3	F-3	VR7	A-3
C9	E-5	C23	A-5	CR10	B-1	L1	E-5	R10	G-4	R24	C-2	R38	E-3	TP4	D-4	VR8	A-3
C10	F-4	C24	A-5	CR11	D-1	L2	E-4	R11	E-4	R25	D-4	R39	A-4	TP5	D-3	VR9	A-4
C11	G-4	C25	G-5	CR12	D-1	Q3	G-4	R12	E-5	R26	D-5	R40	A-4	TP6	D-5	VR10	A-4
C12	D-3	C26	G-4	CR13	A-4	Q4	E-5	R13	F-4	R27	C-2	R41	C-6	TP7	D-5	VR11	A-4
C13	C-3	C27	G-4	CR14	A-4	Q5	E-5	R14	G-3	R28	C-6	R42	F-3	U1	F-4	VR12	D-3
C14	C-3	R1	F-4	CR15	B-6	R1	G-5	R15	F-3	R29	A-2						

Figure 8-20. High Voltage Power Supply (A9) Component Locator

OPERATING AND SERVICE MANUAL

1311B
X-Y DISPLAY

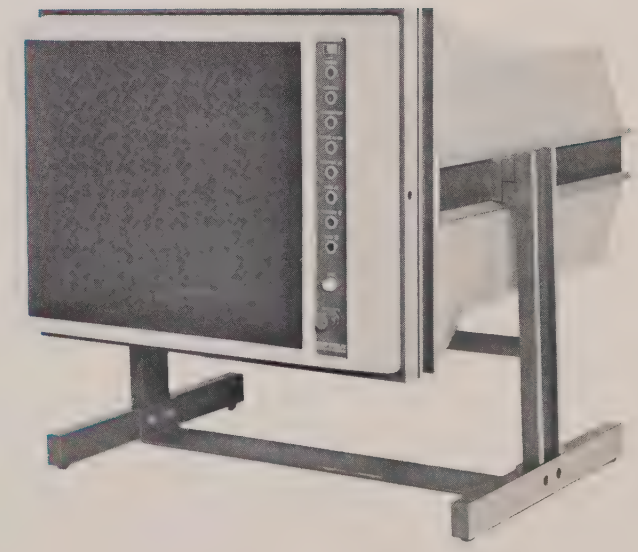

HEWLETT PACKARD

2226A 01834

X-RAY RADIATION NOTICE

ACHTUNG

Model 1311B

WARNING

Während des Betriebs erzeugt dieses Gerät Röntgenstrahlung. Das Gerät ist so abgeschirmt, daß die Dosisleistung weniger als 36 pA/kg (0,5 mR/h) in 5cm Abstand von der Oberfläche der Katodenstrahlröhre beträgt. Somit sind die Sicherheitsbestimmungen verschiedener Länder, u.A. der deutschen Röntgenverordnung eingehalten.

Die Stärke der Röntgenstrahlung hängt im Wesentlichen von der Bauart der Katodenstrahlröhre ab, sowie von den Spannungen, welche an dieser anliegen. Um einen sicheren Betrieb zu gewährleisten, dürfen die Einstellungen der Niederspannungs- und des Hochspannungsnetzteils nur nach der Anleitung in Kapitel V des Handbuches vorgenommen werden.

Die Katodenstrahlröhre darf nur durch die gleiche Type ersetzt werden. (Siehe Kapitel Vi für HP — Ersatzteile).

Das Gerät ist in Deutschland zugelassen unter der Nummer: BW/78/80/Rö

When operating, this instrument emits x-rays; however, it is well shielded and meets safety and health requirements of various countries, such as the X-ray Radiation Act of Germany.

Radiation emitted by this instrument is less than 0.5 mR/hr at a distance of five (5) centimeters from the surface of the cathode-ray tube. The x-ray radiation primarily depends on the characteristics of the cathode-ray tube and its associated low-voltage and high-voltage circuitry. To ensure safe operation of the instrument, adjust both the low-voltage and high-voltage power supplies as outlined in Section V of this manual (if applicable).

Replace the cathode-ray tube with an identical CRT only. Refer to Section VI for proper HP part number.

Number of German License: BW/78/80/Rö

www.manualsplus.com
1007010